ITEM #

MODEL #

NAME #

SIS #

AIA #

Vacuum Packers
Vacuum packer 8m3/h table top



602184 (DVP08D) Vacuum Packer, 8 m3/h, sealing bar length 310mm, table top, digital display

Short Form Specification

Item No.

Table top model in 304 AISI stainless steel with domed transparent PMMA Plexiglas lid. With absolute-type vacuum sensor for vacuum level control, no calibration needed. Pressure chamber with rounded corners for easy cleaning. Digital control panel with 10 editable user programs (vacuum, extra vacuum, sealing time), including cycle for jars. External vacuum in bags or containers possible. Display shows alarm messages if malfunctions are detected (e.g. oil cleaning cycle needed). 2 PE filling plates included. Sealing bar length 310mm. Easy access for service through hinged opening of the body. Optional Bluetooth label printer available, for HACCP compliance.

APPROVAL:

Main Features

- Table-top vacuum packer with oil lubricated vacuum pump.
- Vacuum level control through high-precision, absolute-type vacuum sensor, which does not require calibration.
- Pressure chamber made of constant thickness, hydroformed, stainless steel with rounded corners for easy cleaning.
- Sturdy, transparent PMMA (plexiglass) lid with rounded edges; opens automatically at the end of the cycle.
- Control panel, resistant to liquids, humidity, dirt and dust.
- 10 editable user programs (vacuum, extra vacuum, sealing time).
- 1 vacuum cycle for jars/containers.
- Adjustable sealing time 0.1 to 6 seconds.
- Specific pump oil cleaning cycle (H2Out).
- Automatic warnings if food needs cooling down (hot), failure in the packing process, gas missing, oil change.
- Pre-arranged for external vacuum packing in containers by connecting a specific pipe to the air extraction nozzle (available as spare part).
- 2 PE filling plates included.
- Sealing bar 310 mm, easily removable for cleaning.

Construction

- Entirely constructed in 304 AISI stainless steel.
- Easy access for service through hinged opening of the body.

Optional Accessories

- Stainless steel trolley 470x570x700mm (H) PNC 650239 ❑
- Inclined shelf to vacuum liquids, 300mm (for models with 310mm sealing bar or multiples) PNC 650240 ❑
- Label printer, bluetooth, for 50x60mm labels, with display in English or Italian PNC 650243 ❑
- UK power cord (2m) for vacuum packers PNC 650244 ❑

Vacuum Packers
Vacuum packer 8m3/h table top

Front

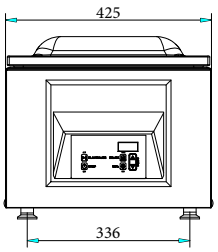

Side

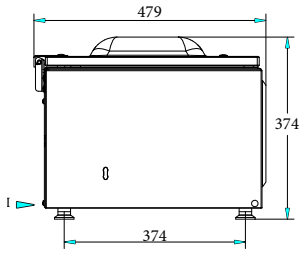

EI = Electrical inlet (power)

Top

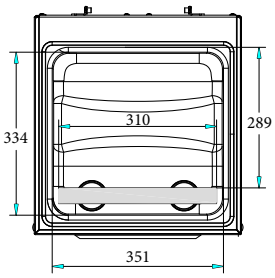

Other

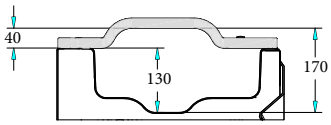

Perspective

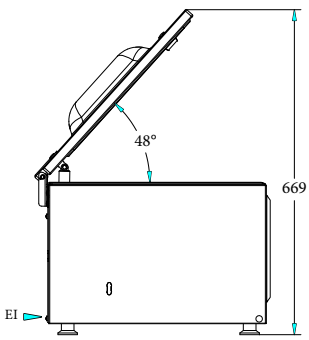

Electric

Supply voltage:	220-240 V/1N ph/50-60 Hz
Total Watts:	0.6 kW

Key Information:

Filling board nr:	2
Gas nozzles:	no gas
External dimensions, Width:	425 mm
External dimensions, Depth:	479 mm
External dimensions, Height:	374 mm
Net weight (kg):	35.5
Well Capacity:	14.1 lt
Pump:	8 m^3/h
Sealing bar position:	Front
Sealing bar length:	310 mm
Max chamber (chamber + cover) dimensions:	334 x 351 x 170 mm
Chamber working dimensions:	289 x 347 x 130 mm

The company reserves the right to make modifications to the products without prior notice. All information correct at time of printing.

2026.11.20