ITEM #

MODEL #

NAME #

SIS #

AIA #

Peelers
Vegetable Peeler, 10 kg - Abrasive Plate & Cylinder



603513 (DT10E1C)	10 kg vegetable peeler. Abrasive plate and abrasive cylinder
603514 (DT10E324C)	10 kg vegetable peeler. Abrasive plate and abrasive cylinder

Short Form Specification

Item No.

Constructed in stainless steel with a transparent lid in special high resistant plastic. The removable rotating plate is covered with a removable rotating plate covered in very resistant abrasive material (silicon carbide). Flat and waterproof (IP55) control panel with programmable timer and low voltage level. An interlocking safety magnetic devices will stop the machine from operating when the lid or unloading door is opened. Removable water jet device is fitted as standard to facilitate cleaning.
Supplied with abrasive plate and abrasive cylinder for hard vegetables peeling.

APPROVAL:

Main Features

- Suitable for 50-200 meals per service.
- Transparent lid in damage-resistant plastic material allows visibility during peeling cycle.
- Supplied with: - abrasive plate and cylinder
- Removable rotating plate covered in very resistant abrasive material (silicon carbide).
- Peels are reduced to small pieces to facilitate drainage process.
- Pulse function to control the unloading operation.
- Removable water inlet, clipped to the cover, designed to serve as a spray to clean the machine.
- Timer with countdown display.
- Magnetic detectors will stop the machine from operating when the lid and/or door are opened.

Construction

- Complete stainless steel construction.
- IP55 waterproof touch button control panel.
- Transparent BPA free cover incorporates a magnetic safety system which stops the machine if lid is not properly closed.

Included Accessories

- 1 of Abrasive plate for T10 or T15 PNC 653203

Optional Accessories

- Abrasive plate for T10 or T15 PNC 653203 ❑
- Drying basket for T10 PNC 653208 ❑
- Filter table with sliding shelf, pre-assembled PNC 653783 ❑
- Filter table with sliding shelf PNC 653784 ❑

Peelers
Vegetable Peeler, 10 kg - Abrasive Plate & Cylinder

Front

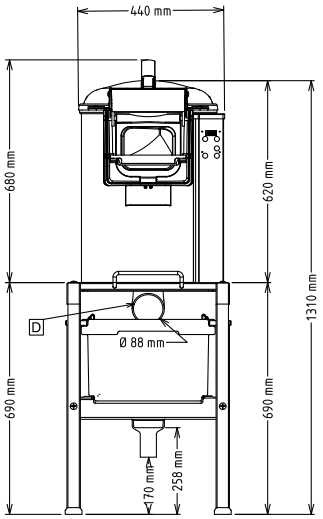

Side

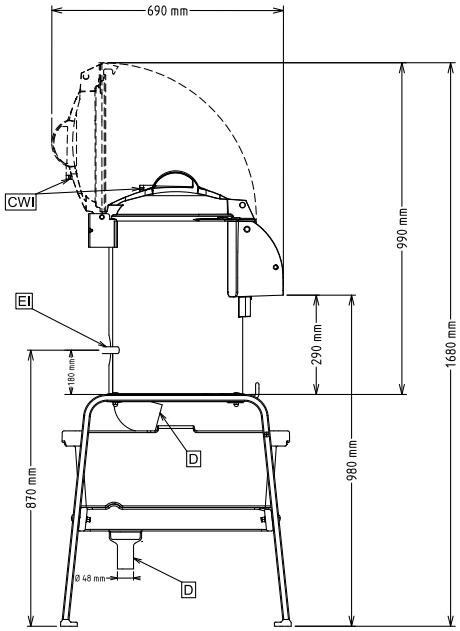

CWI1 = Cold Water inlet 1 (cleaning)
D = Drain
EI = Electrical inlet (power)

Top

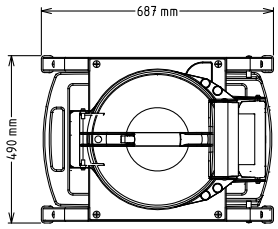

Electric

Supply voltage:	
603513 (DT10E1C)	220-240 V/1N ph/50/60 Hz
603514 (DT10E324C)	200-240/380-440 V/3 ph/50/60 Hz
Electrical power, max:	0.37 kW
Total Watts:	0.37 kW

Capacity:

Performance (up to):	160 kg/Cycle
Capacity:	10 litres

Key Information:

External dimensions, Width:	440 mm
External dimensions, Depth:	690 mm
External dimensions, Height:	680 mm
Shipping weight:	
603513 (DT10E1C)	49 kg
603514 (DT10E324C)	46 kg

The company reserves the right to make modifications to the products without prior notice. All information correct at time of printing.

2026.11.19