Electrolux PROFESSIONAL

Modular Cooking Range Line thermaline 80 - 2 Zone Electric Solid Top, 1 Side with Ecotop

ITEM #

MODEL #

NAME #

SIS #

AIA #

588003 (MALBAAEOAO) Electric Solid Top, 2 zones, ecoTop coating, one-side operated

Short Form Specification

Item No.

Unit constructed according to DIN 18860_2 with 20 mm drop nose top. Internal frame for heavy duty sturdiness in stainless steel. 2 mm top in 1.4301 (AISI 304). Flat surface construction, easily cleanable. THERMODUL connection system enables seamless worktop when units are connected and avoids soil penetrating. ECOTOP model with a 20 mm thick steel cooking surface with heat retaining coating. 2 independently controlled heating zones with 2 electronic sensors per zone for temperature surface control and 8 power levels. Rapid plate heat up, continuously ready to use. Overheat protection switches off the supply in case of overheating. Standby function saves energy and quickly recovers maximum power. Metal knobs with embedded hygienic silicon "soft" grip enable easier handling and cleaning.
IPX5 water resistance certification.
Configuration: One-side operated top. The base needs to be supplied by the factory. Please include appropriate base.

APPROVAL:

Main Features

- 2 heating zones independently controlled.
- Rapid heat up of the plate and continuously ready for use.
- Overheat protection: the temperature sensor switches off the supply in case of overheating.
- Pans can easily be moved from one area to another without lifting.
- Wide rounded cleaning zone around the plates for easier cleaning.
- All major components may be easily accessed from the front.
- ECOTOP model has a 20 mm thick steel DIN 1.7335 nickel coated cooking surface.
- THERMODUL connection system creates a seamless work top when units are connected to each other thus avoiding soil penetrating vital components and facilitating the removal of units in case of replacement or service.
- Metal knobs with embedded hygienic "soft-touch" grip for easier handling and cleaning. The special design of the controls prevents infiltration of liquids or soil into vital components.
- Large visible digital display manufactured in tempered glass to resist heat and chemicals, showing temperatures or power settings. The display also shows on/off status of the appliance and on/off status of the heating elements.
- Cooking plate and base joint profile guarantee against soil infiltration.
- Two electronic sensors per zone to control surface temperature and to protect cooking plate from overheating.
- 8 power levels.

Construction

- IPX5 water resistance certification.
- 2 mm top in 1.4301 (AISI 304).
- Unit constructed according to DIN 18860_2 with 20 mm drop nose top and 70 mm recessed plinth.
- Flat surface construction with minimal hidden areas to easily clean all surfaces
- Internal frame for heavy duty sturdiness in 1.4301 (AISI 304).
- Unit constructed according to DIN 18860_2 with 20 mm drop nose top.

Sustainability

- Standby function for energy saving and fast recovery of maximum power.

Optional Accessories

Modular Cooking Range Line thermaline 80 - 2 Zone Electric Solid Top, 1 Side with Ecotop

Front

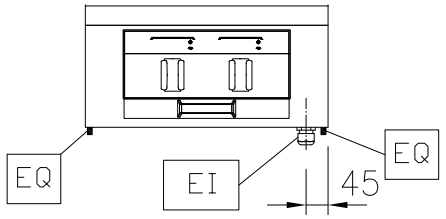

Side

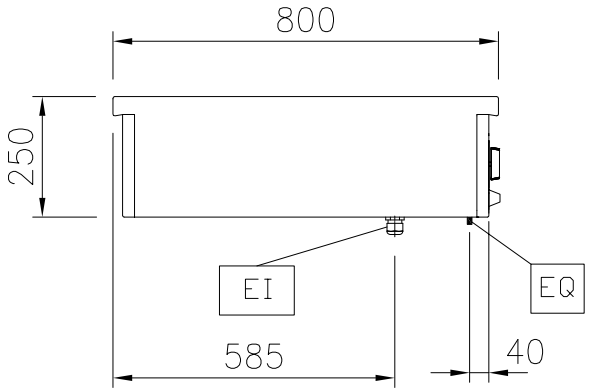

EI = Electrical inlet (power)
EQ = Equipotential screw

Top

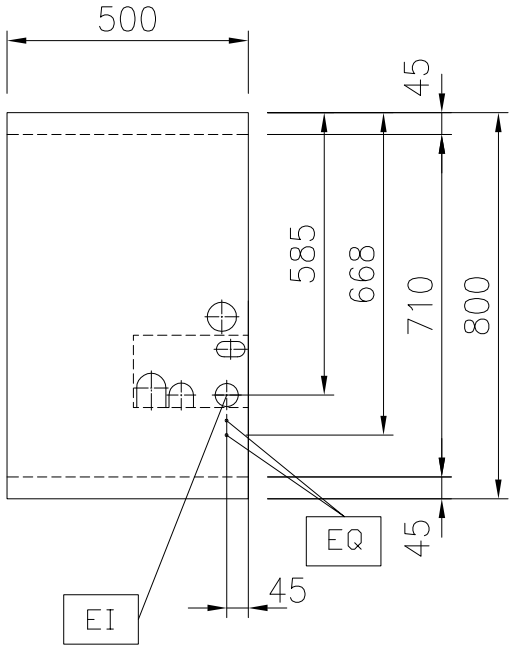

Electric

Supply voltage:	400 V/3N ph/50/60 Hz
Electrical power, max:	6 kW

Key Information:

Working Temperature MIN:	100 °C
Working Temperature MAX:	450 °C
External dimensions, Width:	500 mm
External dimensions, Depth:	800 mm
External dimensions, Height:	250 mm
Net weight:	70 kg
Configuration:	One-Side Operated;Top
Front Plates Power:	3 - 0 kW
Back Plates Power:	3 - kW
Solid top usable surface (width):	360 mm
Solid top usable surface (depth):	630 mm

Sustainability

Current consumption:	13 Amps

The company reserves the right to make modifications to the products without prior notice. All information correct at time of printing.

2026.05.27

Optional Accessories

• Connecting rail kit, 800mm	PNC 912500	❑
• Portioning shelf, 500mm width	PNC 912523	❑
• Portioning shelf, 500mm width	PNC 912553	❑
• Folding shelf, 300x800mm	PNC 912577	❑
• Folding shelf, 400x800mm	PNC 912578	❑
• Fixed side shelf, 200x800mm	PNC 912583	❑
• Fixed side shelf, 300x800mm	PNC 912584	❑
• Fixed side shelf, 400x800mm	PNC 912585	❑
• Connecting rail kit: modular 80 (on the left) to ProThermetic tilting (on the right), ProThermetic stationary (on the left) to ProThermetic (on the right)	PNC 912971	❑
• Connecting rail kit: modular 80 (on the right) to ProThermetic tilting (on the left), ProThermetic stationary (on the right) to ProThermetic (on the left)	PNC 912972	❑
• Endrail kit, flush-fitting, left	PNC 913109	❑
• Endrail kit, flush-fitting, right	PNC 913110	❑
• Endrail kit (12.5mm) for thermaline 80 units, left	PNC 913200	❑
• Endrail kit (12.5mm) for thermaline 80 units, right	PNC 913201	❑
• T-connection rail for back-to-back installations without backsplash (to be ordered as S-code)	PNC 913227	❑
• Insert profile D=800mm	PNC 913230	❑
• Energy optimizer kit 14A - factory fitted	PNC 913244	❑
• Endrail kit, (12.5mm), for back-to-back installation, left	PNC 913249	❑
• Endrail kit, (12.5mm), for back-to-back installation, right	PNC 913250	❑
• Endrail kit, flush-fitting, for back-to-back installation, left	PNC 913253	❑
• Endrail kit, flush-fitting, for back-to-back installation, right	PNC 913254	❑
• Filter W=500mm	PNC 913664	❑
• Electric mainswitch 25A 4mm2 NM for modular H800 electric units (factory fitted)	PNC 913676	❑

The company reserves the right to make modifications to the products without prior notice. All information correct at time of printing.