AURA 3 groups

UAURA3UL



Ref602949
(UAURA3UL)

Traditional Espresso Machine
· 3 Groups
· Easylock Crema Group
· Teflon Steam - Mitigated Hot Water - Teflon Steam
· Inox
· 220 V 1N 60~Hz 4,3kW
· UL/NSF Certified

General Features

The Aura combines high-end performance with modern design. Its stainless steel and chrome body, enhanced by LED lighting, houses advanced brewing technology. With its intuitive touch control boxes and volumetric commands, it ensures consistent extractions.

Thermo-regulated Maestro groups and the Easylock system offer effortless portafilter handling and ensure precise coffee quality. The Aura delivers the reliability and control barista need to achieve exceptional coffee every time.

UNIC

AURA 3 groups

Main Features

- Programmable water and steam.
- Automatic cleaning cycle.
- The professional semi-automatic AURA line owns all the technical features of a high-end traditional espresso machine, offering the perfect harmony of aesthetics and performance.
- Modern design of stainless steel and chrome, the AURA displays an assertive silhouette underlined with LED lighting of the tray grill and around the electronic control boxes with touchscreen interface for an intuitive programming.
- AURA is dedicated to users familiar with volumetric commands that address high performance and consistency in the extraction process.
- The MAESTRO thermo-regulated brew groups are fitted with the EASYLOCK system that help locking and sealing the portafilter with minimal effort.
- Electronic pre infusion.
- Double paneled cup warmer with large capacity.
- USB interface for update.
- 3 Maestro groups.
- 3 independent control boxes with 4 programmable dosing selection, start/stop, shot time display.
- Manual Steamglide lever.

Construction

- Stainless steel body.
- PID (proportional–integral–derivative) Temperature control: a precise controller algorithm system that gives consistency and accuracy to brewing temperature management system.
- Easylock portafilter.
- RS-232 protocol for computer/cashier interface.
- 15.6 liter boiler.

Included Accessories

• 1 of - NOT TRANSLATED -	PNC 871008
• 3 of - NOT TRANSLATED -	PNC 871009

Optional Accessories

• - NOT TRANSLATED -	PNC 871008	❑
• - NOT TRANSLATED -	PNC 871009	❑
• - NOT TRANSLATED -	PNC 871010	❑
• - NOT TRANSLATED -	PNC 871011	❑
• - NOT TRANSLATED -	PNC 871012	❑
• - NOT TRANSLATED -	PNC 871013	❑
• - NOT TRANSLATED -	PNC 871017	❑
• - NOT TRANSLATED -	PNC 871018	❑
• - NOT TRANSLATED -	PNC 871019	❑

UNIC

AURA 3 groups

Electric

Supply voltage:	220 V/1 ph/60 Hz
Electrical power, max:	4.3 kW
Plug type:	

Water:

Cold water temperature (min/max):	5 / 60 °C

Key Information:

External dimensions, Height:	19 5/16" (490 mm)
External dimensions, Weight:	183 lbs (83 kg)
Net weight:	183 lbs (83 kg)
Shipping width:	52 " (1335 mm)
Shipping depth:	29 1/2" (750 mm)
Shipping height:	33 1/16" (820 mm)
Shipping weight:	229 lbs (104 kg)
Shipping volume:	0.8 m^3

Front

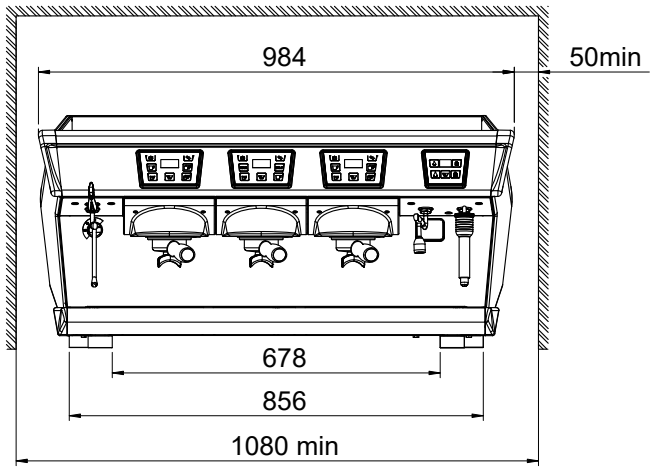

Side

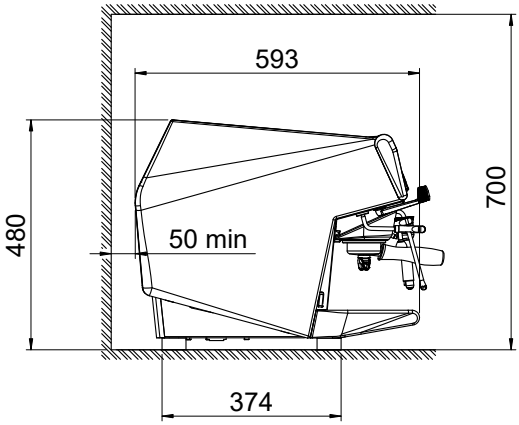

Top

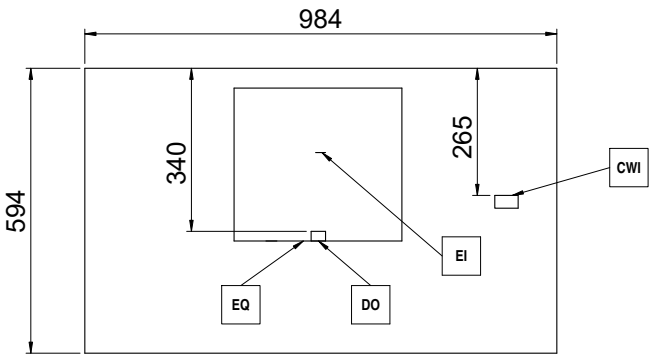

Certifications

The company reserves the right to make modifications to the products without prior notice. All information correct at time of printing.

2026.11.19