CLASSIC PLUS 1 group, Tall cup



Ref602977
(UCLASSIC1HPUL)

Traditional Espresso Machine
· 1 Group
· No Steam - Long Hot Water - Long teflon Steam
· Inox
· 110 V 1N 60~Hz 1,7kW
· UL/NSF Certified

General Features

The Classic is the perfect traditional espresso machine to guarantee top-quality espresso and consistency even in busy periods.

With elegant lines and reliable technologies appreciated by coffee professionals, the Classic is made even more attractive by its quality/price ratio. The Classic is available in 1, 2 or 3 group configurations.

CLASSIC PLUS 1 group, Tall cup

Main Features

- Maestro brew group: directly to boiler group heads are mounted for shot temperature stability.
- Large cup warming capacity: integrated cup warmer on the top of the machines.
- 4 programmable volume keys per group + Semi-automatic key for each group for manual control.
- Automatic cleaning program.
- The CLASSIC Elegant lines and reliable technologies appreciated by coffee professionals, the CLASSIC model is made more attractive by its quality/ price ratio. The CLASSIC is the perfect traditional espresso machine to ensure an excellent quality espresso result, and consistency even during the busiest periods of the day.
- Heavy duty components and welded construction, a direct mounted boiler group head for thermal stability and reliable extraction, easy access to components for uncomplicated servicability, and unlimited steam.
- The tall cup configuration allows the barista to easily prepare large size drinks according to the larger cup clearance available.
- Manual Steamglide lever.
- Manual hot water outlet.

Construction

- Built-in cup warmer.

Optional Accessories

• - NOT TRANSLATED -	PNC 871011	❑
• - NOT TRANSLATED -	PNC 871012	❑
• - NOT TRANSLATED -	PNC 871013	❑
• - NOT TRANSLATED -	PNC 871017	❑
• - NOT TRANSLATED -	PNC 871018	❑
• - NOT TRANSLATED -	PNC 871019	❑

CLASSIC PLUS 1 group, Tall cup

Electric

Supply voltage:	110 V/1 ph/60 Hz
Electrical power, max:	1.7 kW
Plug type:	Cable without plug

Water:

Cold water temperature (min/max):	5 / 60 °C

Key Information:

External dimensions, Height:	25 9/16" (650 mm)
External dimensions, Weight:	99 lbs (45 kg)
Net weight:	99 lbs (45 kg)
Shipping width:	19 11/16" (500 mm)
Shipping depth:	29 1/2" (750 mm)
Shipping height:	30 5/16" (770 mm)
Shipping weight:	121 lbs (55 kg)
Shipping volume:	0.3 m³

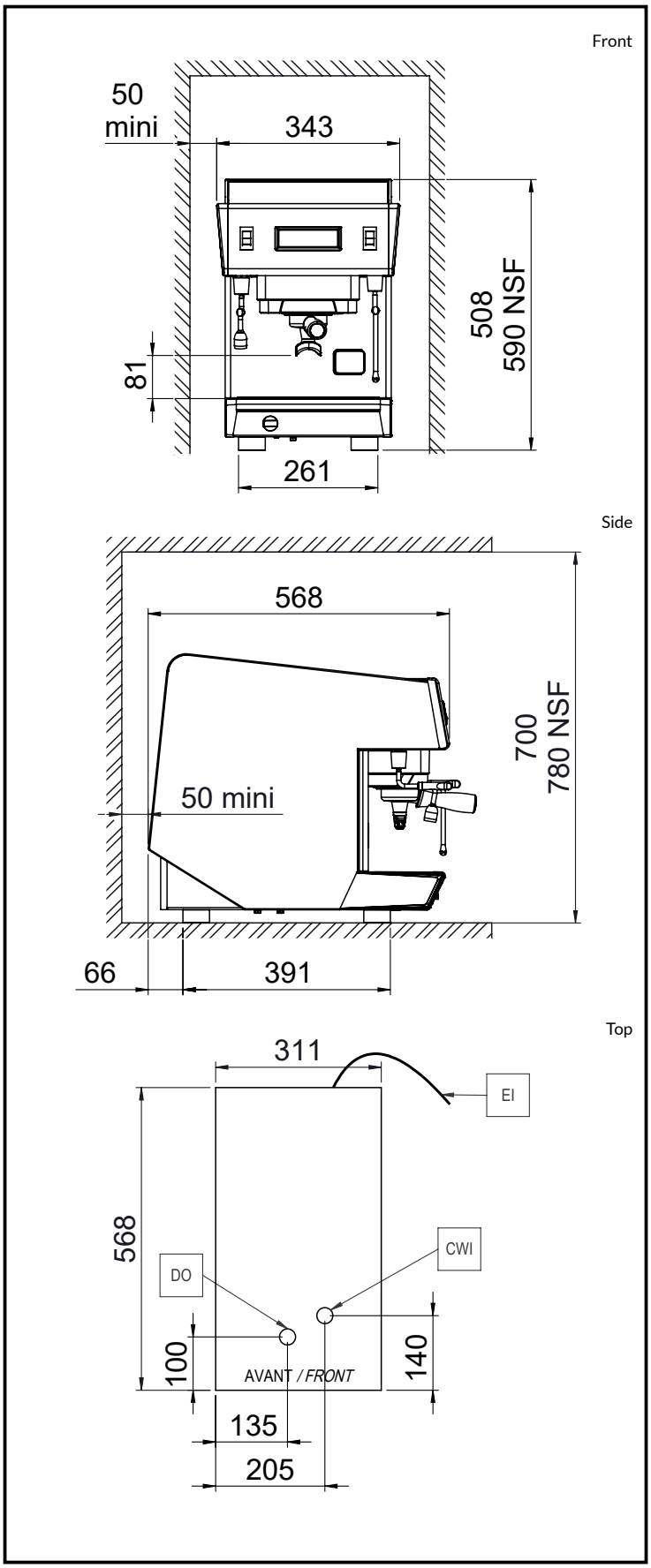

Certifications

The company reserves the right to make modifications to the products without prior notice. All information correct at time of printing.

2026.11.19