CLASSIC PLUS 2 groups, Tall cup



Ref602978
(UCLASSIC2HPUL)

Traditional Espresso Machine
· 2 Groups
· Long Teflon Steam - Long Hot Water - Long teflon Steam
· Inox
· 220 V 1N 60~Hz 4,3kW
· UL/NSF Certified

General Features

The Classic is the perfect traditional espresso machine to guarantee top-quality espresso and consistency even in busy periods.

With elegant lines and reliable technologies appreciated by coffee professionals, the Classic is made even more attractive by its quality/price ratio. The Classic is available in 1, 2 or 3 group configurations.

UCLASSIC2HPUL

UNIC

CLASSIC PLUS 2 groups, Tall cup

Main Features

- Maestro brew group: directly to boiler group heads are mounted for shot temperature stability.
- Large cup warming capacity: integrated cup warmer on the top of the machines.
- 4 programmable volume keys per group + Semi-automatic key for each group for manual control.
- Automatic cleaning program.
- Heavy duty components and welded construction, a direct mounted boiler group head for thermal stability and reliable extraction, easy access to components for uncomplicated servicability, and unlimited steam.
- The tall cup configuration allows the barista to easily prepare large size drinks according to the larger cup clearance available.
- Programmable steam and hot water.
- Manual Steamglide lever.

Construction

- Built-in cup warmer.

UNIC

CLASSIC PLUS 2 groups, Tall cup

Electric

Supply voltage:	220 V/1 ph/60 Hz
Electrical power, max:	4.3 kW
Plug type:	Cable without plug

Water:

Cold water temperature (min/max):	5 / 60 °C

Key Information:

External dimensions, Height:	25 9/16" (650 mm)
External dimensions, Weight:	143 lbs (65 kg)
Net weight:	143 lbs (65 kg)
Shipping width:	43 5/16" (1120 mm)
Shipping depth:	29 1/2" (750 mm)
Shipping height:	33 1/16" (845 mm)
Shipping weight:	181 lbs (82 kg)
Shipping volume:	0.7 m^3

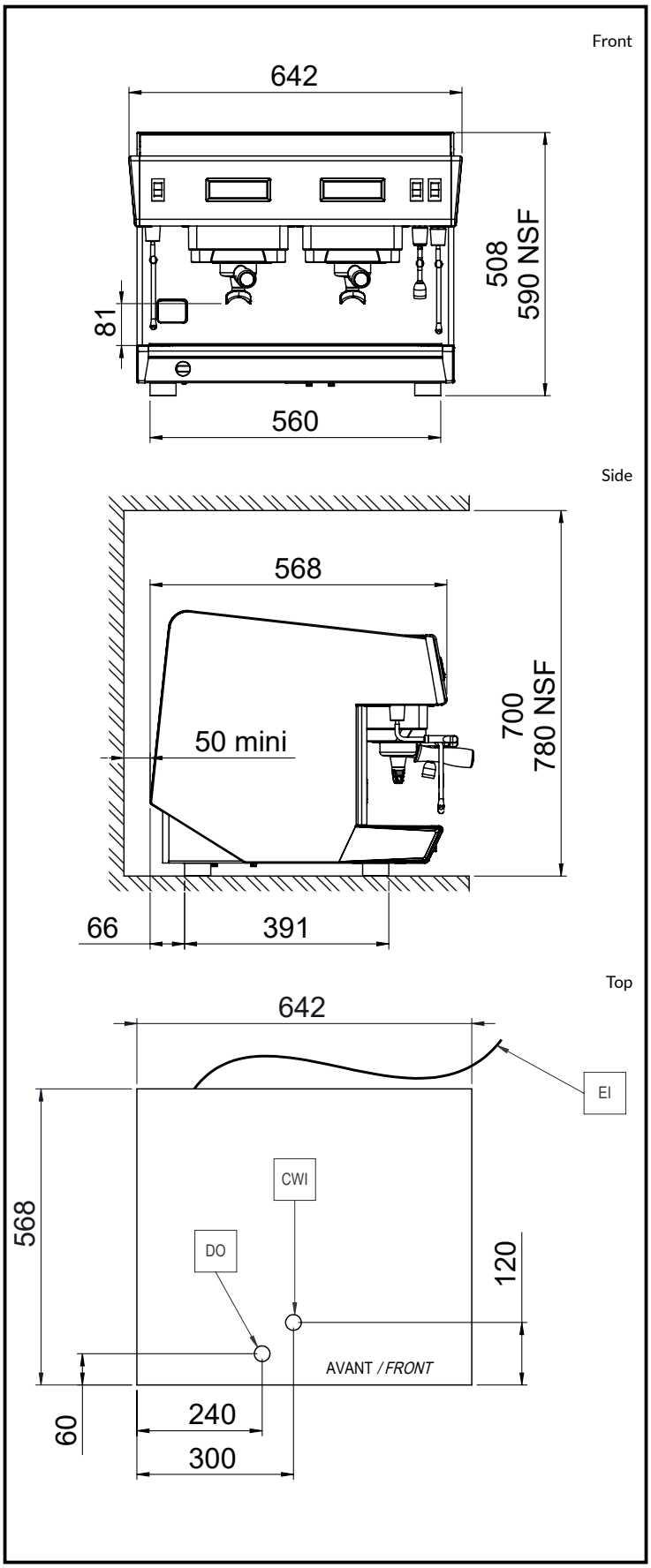

Certifications

The company reserves the right to make modifications to the products without prior notice. All information correct at time of printing.

2026.11.19