TANGO XP Fridge Module, UL



Ref871093
(NFRIGOXPPB)

Side milk refrigerator with exclusive pump system, with 9L capacity container for TANGO XP

NFRIGOXPPB

UNIC

TANGO XP Fridge Module, UL

Main Features

- Supply, heating and foaming of fresh milk for creating delicious hot or cold drinks with milk or frothed milk.
- It includes an exclusive pump system that make possible the preparation of hot and cold milk based beverages.
- Efficient insulation all around.

Construction

- Internally rounded corners for easy cleaning.
- Built-in cooling unit.
- Digital display to set temperature, control self-defrosting, milk level warning.
- Cup tray on top provides large storage.

Optional Accessories

- KIT OF RAISED 3” FEET PNC 871041 ❑

UNIC

TANGO XP Fridge Module, UL

Electric

Supply voltage:	110 V/1 ph/60 Hz
Electrical power, max:	0.08 kW
Plug type:	USA NEMA 5-20P

Key Information:

External dimensions, Height:	20 5/16" (516 mm)
Net weight:	57 lbs (26 kg)
Shipping width:	19 11/16" (500 mm)
Shipping depth:	29 1/2" (750 mm)
Shipping height:	33 1/16" (840 mm)
Shipping weight:	82 lbs (37 kg)
Shipping volume:	0.3 m^3
Sustainability	
Current consumption:	0.8 Amps

Front

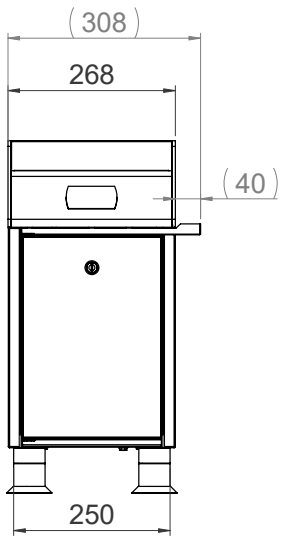

Side

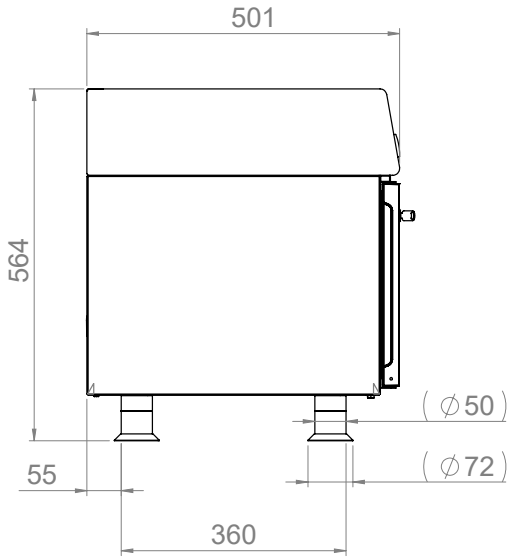

Top

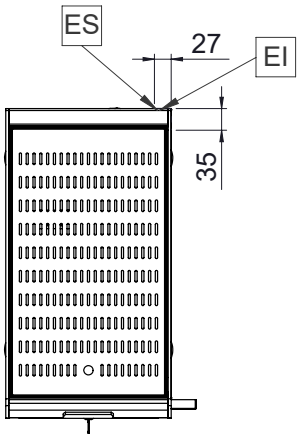

The company reserves the right to make modifications to the products without prior notice. All information correct at time of printing.

2026.11.19

Part of Electrolux Professional Group

UNIC