# AURA 2 groups, Dosamat technology

UAURA2DO




**Ref: 602586**
**(UAURA2DO)**

Traditional Espresso Machine
· 2 Groups
· Easylock Maestro Group
· DOSAMAT Keyboard
· Inox Steam - Mitigated Hot Water - Inox Steam
· Inox
· 400 V 3N 50~Hz 4,7kW
· CE/CB Certified

## General Features

The Aura combines high-end performance with modern design. Its stainless steel and chrome body, enhanced by LED lighting, houses advanced brewing technology. With its intuitive touch control boxes and volumetric commands, it ensures consistent extractions.

Thermo-regulated Maestro groups and the Easylock system offer effortless portafilter handling and ensure precise coffee quality. The Aura delivers the reliability and control barista need to achieve exceptional coffee every time.

UNIC

# AURA 2 groups, Dosamat technology

## Main Features

- Programmable water and steam.
- Automatic cleaning cycle.
- The professional semi-automatic AURA line owns all the technical features of a high-end traditional espresso machine, offering the perfect harmony of aesthetics and performance.
- Modern design of stainless steel and chrome, the AURA displays an assertive silhouette underlined with LED lighting of the tray grill and around the electronic control boxes with touchscreen interface for an intuitive programming.
- Manual Steamglide lever.
- AURA is dedicated to users familiar with volumetric commands that address high performance and consistency in the extraction process.
- The MAESTRO thermo-regulated brew groups are fitted with the EASYLOCK system that help locking and sealing the portafilter with minimal effort.
- 2 Maestro groups.
- 2 independent control boxes with 4 programmable dosing selection with Dosamat ® self recognition of portafilter, start/stop, shot time display.
- Electronic pre infusion.
- Double paneled cup warmer with large capacity.
- USB interface for update.

## Construction

- Stainless steel body.
- PID (proportional–integral–derivative) Temperature control: a precise controller algorithm system that gives consistency and accuracy to brewing temperature management system.
- 10.1 liter boiler.
- Easylock portafilter.
- RS-232 protocol for computer/cashier interface.

## Included Accessories

| | |
|---|---|
| • 1 of Filter holder for one cup | PNC 871008 |
| • 2 of Filter holder for two cups | PNC 871009 |

## Optional Accessories

| | | |
|---|---|---|
| • Filter holder for one cup | PNC 871008 | ❑ |
| • Filter holder for two cups | PNC 871009 | ❑ |
| • Cold touch steam wand only for machines without Steamair | PNC 871010 | ❑ |
| • Cappuccinatore/foamer device with two positions for hot milk and for foam only for machines without Steamair | PNC 871011 | ❑ |
| • Cappuccino system/auto foam device by air injection for traditional machines only for machines without Steamair | PNC 871012 | ❑ |
| • Teflon steam wand only for machines without Steamair | PNC 871013 | ❑ |
| • Side milk refrigerator 8 liter nominal capacity for up to 4 liter milk containers | PNC 871014 | ❑ |
| • Side milk refrigerator 8 liter nominal capacity for up to 4 liter milk containers with digital display | PNC 871015 | ❑ |
| • Filter for one cup, 12 gr | PNC 871017 | ❑ |
| • Filter for two cups, 18 gr | PNC 871018 | ❑ |
| • Stainless steel knock box drawer | PNC 871019 | ❑ |

UNIC

# AURA 2 groups, Dosamat technology

## Electric

| | |
|---|---|
| **Supply voltage:** | 400 V/3N ph/50 Hz |
| **Electrical power, max:** | 4.8 kW |
| **Plug type:** | Cable without plug |

## Water:

| | |
|---|---|
| **Cold water temperature (min/max):** | 5 / 60 °C |

## Key Information:

| | |
|---|---|
| **Net weight:** | 73 kg |
| **Shipping volume:** | 0.69 m³ |

Sustainability

| | |
|---|---|
| **Current consumption:** | 7.2 Amps |

## Certifications

Front

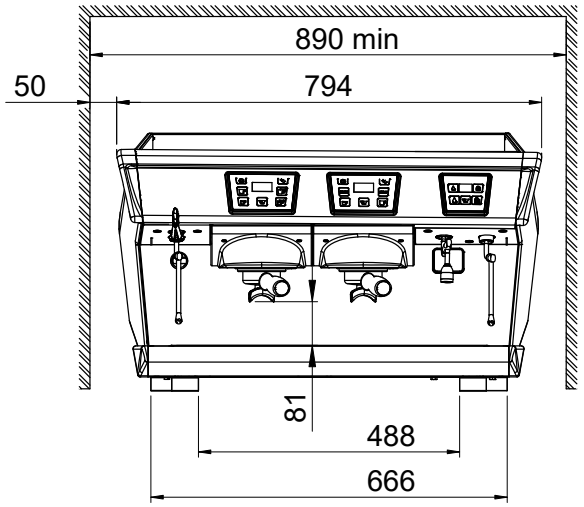


Side

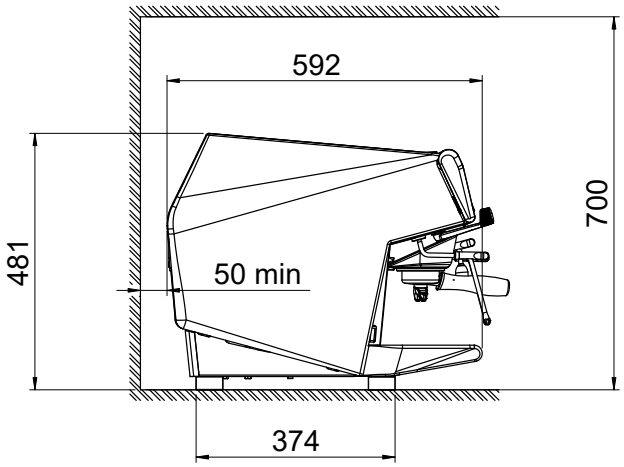


Top

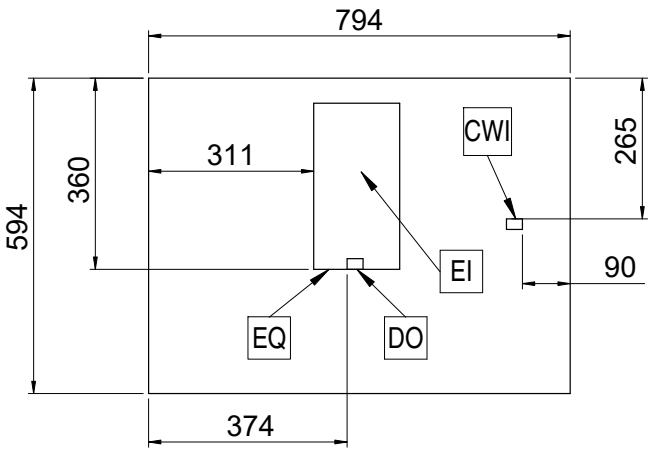


The company reserves the right to make modifications to the products without prior notice. All information correct at time of printing.

2026.11.18