Classic 2 groups, UK plug



Ref: 602641
(CLASSIC2)

Traditional Espresso Machine
· 2 Groups
· Inox Steam - Hot Water - Inox Steam
· Inox
· 240 V 1N 50~Hz 4,8kW
· CE/CB Certified

General Features

The Classic is the perfect traditional espresso machine to guarantee top-quality espresso and consistency even in busy periods.

With elegant lines and reliable technologies appreciated by coffee professionals, the Classic is made even more attractive by its quality/price ratio. The Classic is available in 1, 2 or 3 group configurations.

Classic 2 groups, UK plug

Main Features

- Heavy duty components and welded construction, a direct mounted boiler group head for thermal stability and reliable extraction, easy access to components for uncomplicated servicability, and unlimited steam.
- 2 stainless steel Steam arms / 2 Steam switches on, off and pulse positions.
- Maestro brew group: directly to boiler group heads are mounted for shot temperature stability.
- Large cup warming capacity: integrated cup warmer on the top of the machines.
- 4 programmable volume keys per group + Semi-automatic key for each group for manual control.
- Automatic cleaning program.

Construction

- Built-in cup warmer.

Included Accessories

• 1 of Filter holder for one cup	PNC 871002
• 2 of Filter holder for two cups	PNC 871003

Optional Accessories

• Filter holder for one cup	PNC 871002	❑
• Filter holder for two cups	PNC 871003	❑
• Filter holder for three cups	PNC 871004	❑
• Filter for one cup, 12 gr	PNC 871017	❑
• Filter for two cups, 18 gr	PNC 871018	❑
• Stainless steel knock box drawer	PNC 871019	❑

UNIC

Classic 2 groups, UK plug

Electric

Supply voltage:	240 V/1N ph/50/60 Hz
Electrical power, max:	4.8 kW
Plug type:	Cable without plug

Water:

Cold water temperature (min/max):	5 / 60 °C

Key Information:

Net weight:	55 kg
Shipping volume:	0.71 m³

Sustainability

Current consumption:	20 Amps

Certifications



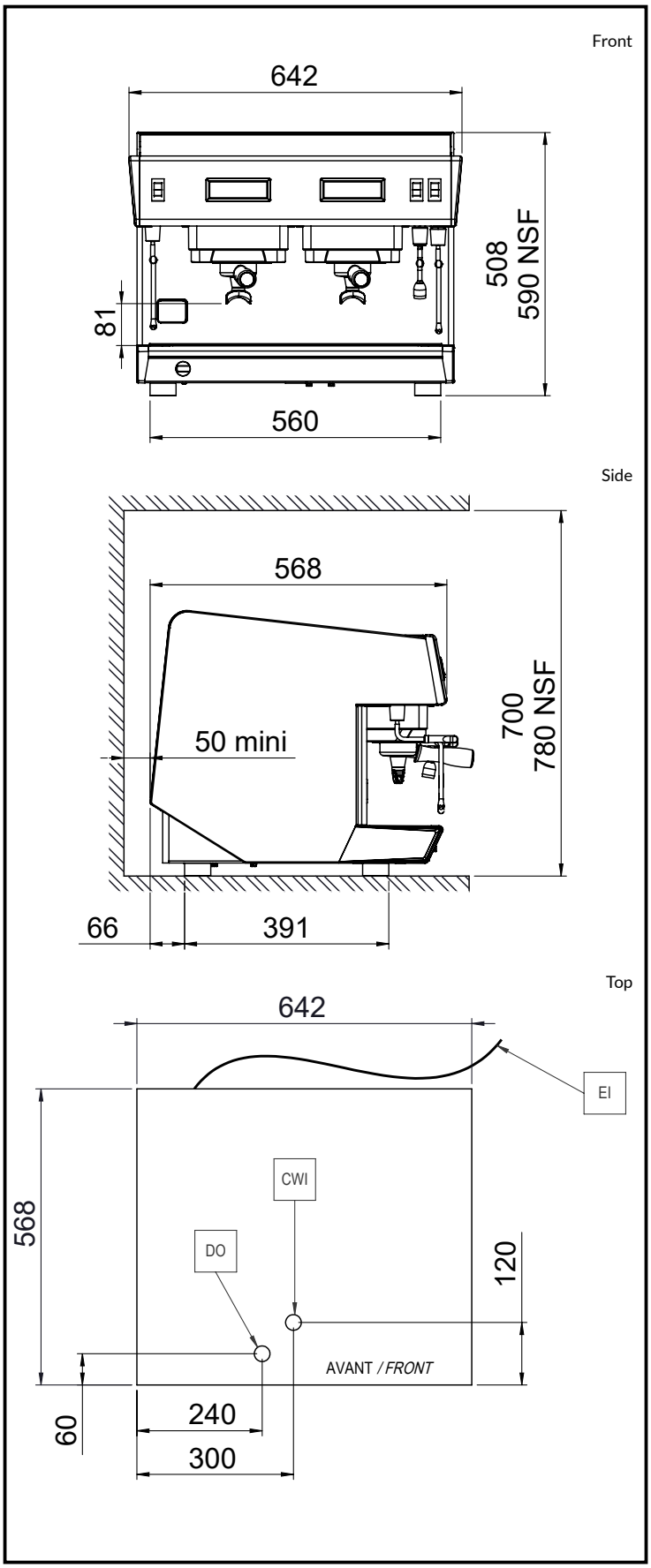

The company reserves the right to make modifications to the products without prior notice. All information correct at time of printing.

2026.11.20