Classic e 2 groups, Steamair



Ref: 604031
(CH2.CB.230.3K.SA)

Traditional Espresso Machine
· 2 Groups
· Cool Touch Steam - Hot Water - Steamair
· Inox
· 230 V 1N 50~Hz 3kW
· CE/CB Certified

General Features

The Classic e's elegant lines are underlined by a control board featuring new control buttons. User-friendly and low-maintenance, it delivers features that ensure perfect coffee extraction of consistent quality, and high performance during periods of intensive use.

Classic e 2 groups, Steamair

Main Features

- Heavy duty components and welded construction, a direct mounted boiler group head for thermal stability and reliable extraction, easy access to components for uncomplicated servicability, and unlimited steam.
- Maestro brew group: directly to boiler group heads are mounted for shot temperature stability.
- 4 programmable volume keys per group + Semi-automatic key for each group for manual control.
- Automatic cleaning cycle.
- Programmable water and steam.
- Manual Steamglide lever.
- Steamair milk auto-frother programmable outlet.
- Cool touch steam outlets to control steam without the risk of burns, easier to clean after each use

Construction

- Built-in cup warmer.
- Stainless steel body.
- PID (proportional–integral–derivative) Temperature control: a precise controller algorithm system that gives consistency and accuracy to brewing temperature management system.

Sustainability

- Standby mode for controlled management of energy consumption

Optional Accessories

• Filter holder for one cup	PNC 871002	❑
• Filter holder for two cups	PNC 871003	❑
• Filter holder for three cups	PNC 871004	❑
• Filter for one cup, 12 gr	PNC 871017	❑
• Filter for two cups, 18 gr	PNC 871018	❑
• Stainless steel knock box drawer	PNC 871019	❑

UNIC

Classic e 2 groups, Steamair

Electric

Supply voltage:	200-240 V/1N ph/50/60 Hz
Electrical power, max:	3.4 kW
Current consumption:	14.5 Amps
Plug type:	Cable without plug

Water:

Cold water temperature (min/max):	5 / 60 °C

Key Information:

Net weight:	54 kg
Shipping weight:	80 kg
Shipping height:	845 mm
Shipping width:	1120 mm
Shipping depth:	750 mm
Shipping volume:	0.69 m^3

Certifications



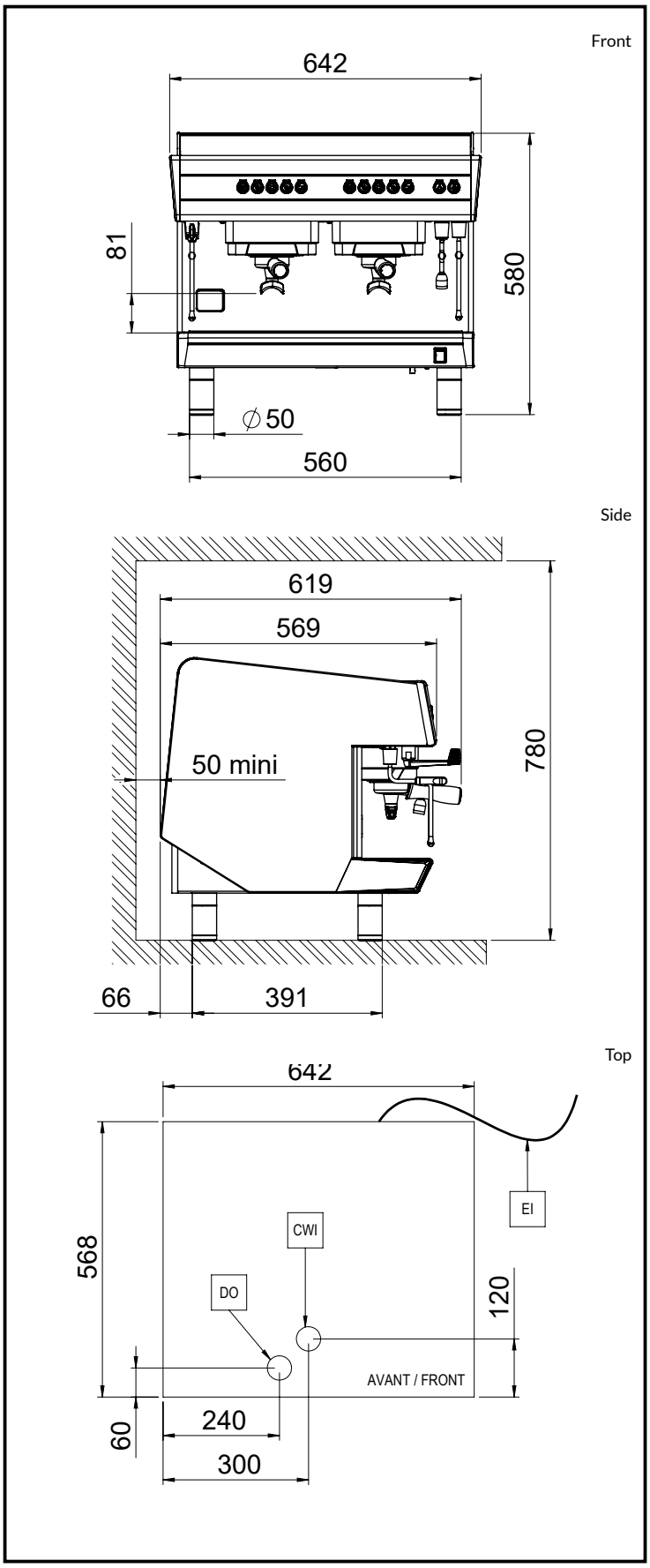

The company reserves the right to make modifications to the products without prior notice. All information correct at time of printing.

2026.11.18