Classic 1 group



Ref: 602626
(CLASSIC1)

Traditional Espresso Machine
· 1 Group
· No Steam - Hot Water - Inox Steam
· Inox
· 230 V 1N 50~Hz 3kW
· CE/CB Certified

General Features

The Classic is the perfect traditional espresso machine to guarantee top-quality espresso and consistency even in busy periods.

With elegant lines and reliable technologies appreciated by coffee professionals, the Classic is made even more attractive by its quality/price ratio. The Classic is available in 1, 2 or 3 group configurations.

Classic 1 group

Specifications

- The CLASSIC Elegant lines and reliable technologies appreciated by coffee professionals, the CLASSIC model is made more attractive by its quality/ price ratio. The CLASSIC is the perfect traditional espresso machine to ensure an excellent quality espresso result, and consistency even during the busiest periods of the day.
- Heavy duty components and welded construction, a direct mounted boiler group head for thermal stability and reliable extraction, easy access to components for uncomplicated servicability, and unlimited steam.
- Maestro brew group: directly to boiler group heads are mounted for shot temperature stability.
- Large cup warming capacity: integrated cup warmer on the top of the machines.
- 4 programmable volume keys per group + Semi-automatic key for each group for manual control.
- Automatic cleaning program.

Construction

- Built-in cup warmer.

Included Accessories

• 1 of Filter holder for one cup	PNC 871002
• 1 of Filter holder for two cups	PNC 871003

Optional Accessories

• Filter holder for one cup	PNC 871002	❑
• Filter holder for two cups	PNC 871003	❑
• Filter holder for three cups	PNC 871004	❑
• Filter for one cup, 12 gr	PNC 871017	❑
• Filter for two cups, 18 gr	PNC 871018	❑
• Stainless steel knock box drawer	PNC 871019	❑

UNIC

Classic 1 group

Electric

Supply voltage:	230 V/1N ph/50 Hz
Electrical power, max:	3 kW
Plug type:	Cable without plug

Water:

Cold water temperature (min/max):	5 / 60 °C

Key Information:

Net weight:	41 kg
Shipping volume:	0.29 m³
Sustainability	
Current consumption:	13 Amps

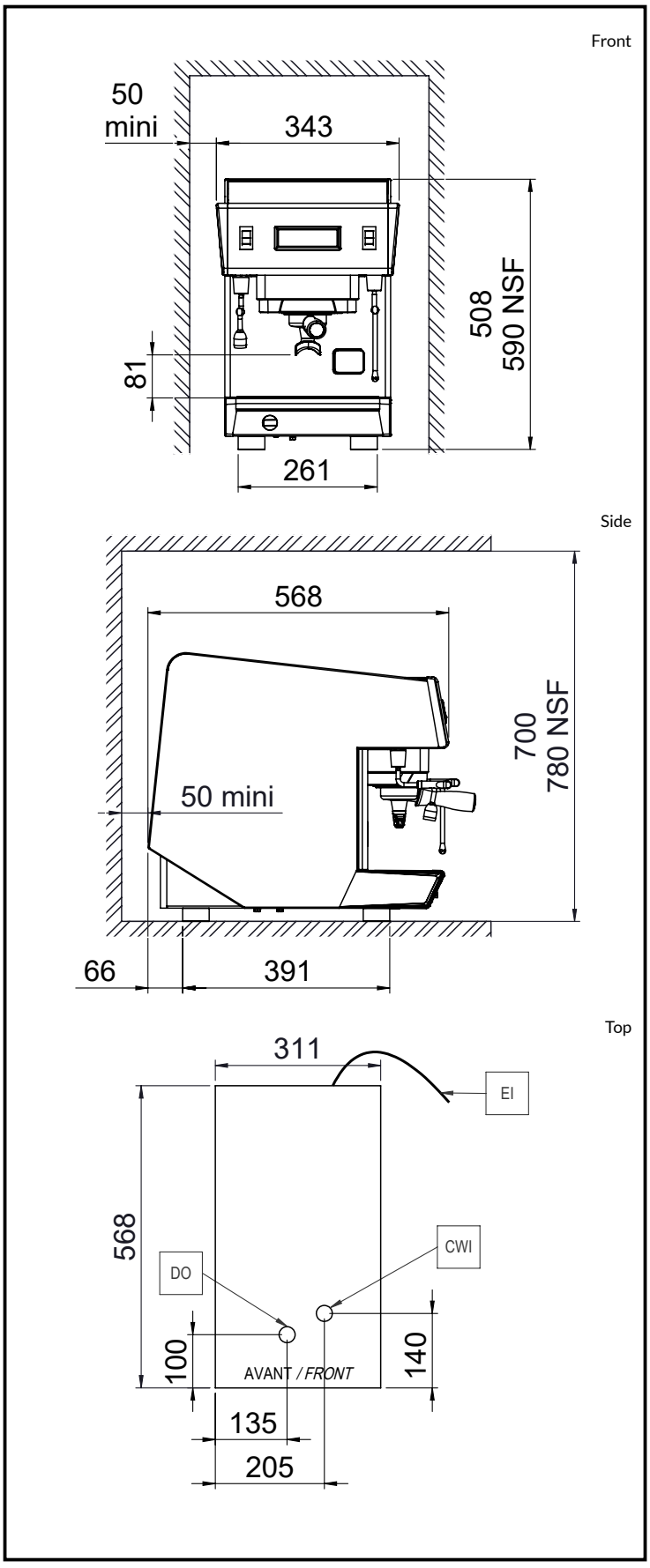

Certifications

The company reserves the right to make modifications to the products without prior notice. All information correct at time of printing.

2026.11.20