ZANUSSI PROFESSIONAL

ITEM #

MODEL #

NAME #

SIS #

AIA #

Warewashing
Undercounter DW (L) Z-Active 100 with pressure boiler, rinse aid pump, max 65 r/h, 1 phase, Schuko plug

400302 (ZTUCL1S)

Undercounter dishwasher (L), touch control, single skin with pressure boiler, rinse aid pump, max. 65 r/h, 1 phase, Schuko plug

Short Form Specification

Item No.

Zanussi Professional Undercounter dishwasher hot sanitation type, suitable for 500*500mm racks. Washing performance is ensure by a powerful wash pump, large capacity wash tank, upper and lower integrated washing & rinsing revolving spray arms in composite material. Rinse temperature and pressure guaranteed by built in pressure boiler and interlocked valves control system. Uses from 2.1 to 2.4 liters of clean water at final rinse. Two pre-settled automatic cycles for different types of wares, configurable on-site. Double skin insulated door. 304 AISI stainless steel construction to include internal tank and boiler, door and external panels. Electronic control with color coded user interface Touch Button type and LED info icons. Automatic self-cleaning cycle run after the machine is switched-off. The unit include rinse aid dispenser peristatic pump. Electrical characteristics to be 230 volts one phase 50Hz operation, equipped with electric cable and shuko plug. The machine is supplied with embedded connectivity Wi-Fi module and Bluetooth APP.

APPROVAL:

Main Features

- Max. theoretical washing capacity in ideal condition of 65 racks or 1170 dishes per hour, with fast cycle available on APP.
- Unique temperature interlock guarantees required temperatures in both the wash and final rinse in case of emergency cold water feeding.
- An effective rinse system uses only 2.1/2.4 liters of clean hot water per basket for lower running costs.
- Washing system endowed with rotating integrated washing & rinsing arms, high powered wash pump and large capacity boiler for professional washing.
- 4 second (variable) pause after washing and before rinsing ensures that no drops of unclean water will fall on the clean items at the end of the rinsing cycle.
- Fully automatic self-cleaning cycle avoids the risk of bacteria proliferation.
- State-of-the-art electronic controls with built-in programming, self-diagnostics for serviceability and automatic interior self-cleaning cycle.
- Simple service from the front for technical purpose, by top for electronic boards; by lower panel for main components.
- IPx4 water protection.
- The pump filter inside the tank protects the washing pump by soil penetration with its extended surface, keeping the washing water clean.
- The single piece upper & lower arms clip-on type, interchangeable, easy to remove & reinstall. The combined washing & rinsing spraying system guarantees extended water coverage inside the chamber for excellent washing performance.
- Built-in pressure boiler sized to raise incoming 55-65 °C water to guarantee the right rinsing temperature for sanitizing rinse. No external booster is required.
- Calculation by energy consumption during product usage (36 cycles/day*300 days/year), considering a mix of energy sources as by calibrated EU database upd. values [kgCO2eq /KWh] - Source: IEA 2020 released in 2023 - The EIA Emissions Factors are specified for Electricity & Heat CO2 and include CH4 and N2O factors, according to IEA for 2021 also. Comparison made between Z-Active 100 with MyEco cycle and the previous Zanussi Professional Undercounter range with 3lt water consumption/cycle.
- Touch button user interface provide useful information using different colours reflecting appliance status; and LED icons.
- App allows on-site customization of the washing cycles, as well as adjusting chemicals dosage. It provides on time feedback of the appliance and alarm info.
- Built-in rinse aid with automatic initial and continuous cycle loading for perfect result while minimizing service and maintenance needs.

Construction

- Front and side panels, door and wash tank made in heavy duty anti-corrosive AISI 304 stainless steel.
- 304 stainless steel boiler with higher welding protection to increase resistance to corrosion.
- The boiler drain facilitates the evacuation of stagnant water after long periods of inactivity to ensure a higher level of hygiene.
- Large wash tank with round corners and no pipes to avoid dirt built-up.

- Element protection from dry fire and low water.
- Double skin insulated door.
- Completely closed on the back by a cover plate.
- Unit to feature smooth surfaces to facilitate cleaning.
- PVC water supply hose with metal connections resistant to high water pressure.
- Unit to feature rinse aid and detergent dispenser pumps.
- Washing & rinsing arms in high temperature resistant glass fiber reinforced polymer material.

Sustainability

- Water consumption 2.1 lt/rack with MyEco cycle.
- Average energy consumption 260watt/cycle with MyEco Cycle.
- Washing cycles and chemicals setup adjustable by App.
- Simple operation through the user-friendly interface, and ergonomic design ensures minimal stress on the user. Colored touchpoints on removable components ensure fast cleaning operations.
- The cardboard packaging on pallet is fully recyclable. The cardboard is made of 70% recycled material, and FSC*-certified paper, printed with with eco-friendly ; to ensure complete sustainability and environmental responsibility. (* Forest Stewardship Council which is the world's leading organization for sustainable forestry-uses).
- Product lifecycle extension thanks to easy access for service technician, dedicated diagnostic support and troubleshooting procedure and availability of spare parts for at least 10 years.

The company reserves the right to make modifications to the products without prior notice. All information correct at time of printing.

Included Accessories

- 1 of Yellow cutlery container PNC 864242
- 1 of Basket for 18 dinner plates or 27 side plates (max. diam. 240 mm) PNC 867002

Optional Accessories

- Stand for undercounter dishwasher PNC 860418 ❑
- Filter for partial demineralization PNC 864017 ❑
- Kit to measure total/partial water hardness PNC 864050 ❑
- Detergent pump kit PNC 864218 ❑
- Yellow cutlery container PNC 864242 ❑
- Filter for total demineralization PNC 864367 ❑
- Rinse booster pump kit (50Hz) for Z-Active undercounter PNC 864492 ❑
- Drain pump kit for Z-Active undercounter PNC 864494 ❑
- Kit wash tank filters in composite material (1 central support and 2 filters) for Z-Active undercounter PNC 864495 ❑
- Half size basket universal PNC 864527 ❑
- Half size basket for plates PNC 864528 ❑
- Half size basket for glasses PNC 864529 ❑
- Set of 4 yellow cutlery containers PNC 865574 ❑
- Basket for 12 soup plates or 12 cups (max. diam. 240 mm) PNC 867000 ❑
- Basket for 16 soup plates or 16 dinner plates PNC 867001 ❑
- Basket for 18 dinner plates or 27 side plates (max. diam. 240 mm) PNC 867002 ❑
- Basket for 12 plates (max. diam. 300 mm) PNC 867003 ❑
- Basket for 5 trays 530x325 mm - red, for undercounter (top level), utensil dishwashers, hood type, rack type PNC 867006 ❑
- Basket for cups and coffee cups (24-48 pcs) - blue PNC 867007 ❑
- Basket for 24 tilted cups - blue PNC 867008 ❑
- Cover grid for small/light items in rack PNC 867016 ❑
- Basket for 16 glasses max. height: 120 mm diameter: 100 mm - blue PNC 867020 ❑
- Basket for 16 glasses max. height: 70 mm - blue PNC 867023 ❑
- Basket for 16 glasses max. height: 170 mm diameter: 100 mm - blue PNC 867030 ❑
- Basket for 16 glasses max. height: 220 mm diameter: 100 mm - blue PNC 867040 ❑

The company reserves the right to make modifications to the products without prior notice. All information correct at time of printing.

Warewashing
Undercounter DW (L) Z-Active 100 with pressure boiler, rinse aid pump, max 65 r/h, 1 phase, Schuko plug

Front

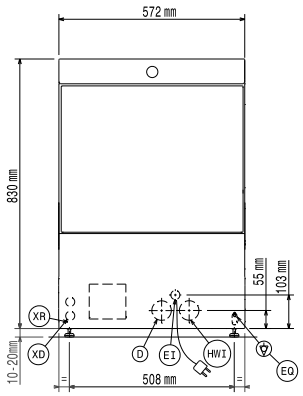

Side

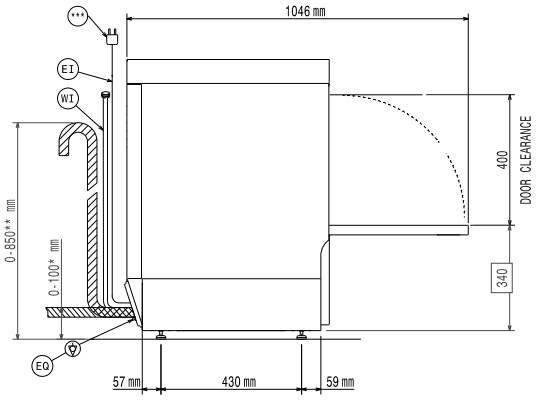

* Without drain pump

** With drain pump

***Plug only for Single Phase Machine

D	=	Drain
EI	=	Electrical inlet (power)
EO	=	Electrical Outlet
HWI	=	Hot water inlet
XR	=	Rinse aid connection

Top

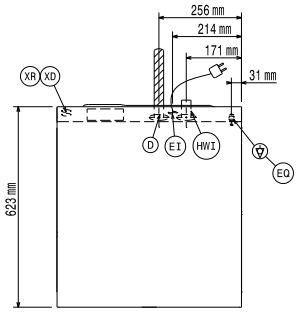

Electric

Supply voltage:	220-240 V/1 ph/50 Hz
Default Installed Power:	3.3 kW
Boiler heating elements:	2,8 kW
Tank heating elements:	2 kW
Wash pump size:	0.736 kW

Water:

Pressure, min-max:	2-5 bar
Water supply temperature*:	55-65 °C
Drain line size:	40 mm
Inlet Water supply pressure:	29 - 73 psi (2 - 5 bar)
Washing tank capacity (lt):	22
Water consumption per cycle (lt):	2.1 / 2.4
Boiler Capacity (lt):	5,8

Key Information:

*only available on App by Jan 2025

Baskets per hour (fast*/glasses*/ multipurpose&cups/intensive*/ MyEco):	65 / 40 / 36 / 24 / 15
Working cycles time (sec.):	55 / 90 / 100 / 150 / 240
Dishes per hour:	1170 / 720 / 648 / 432 / 270
Wash temperature:	55-65°C
Cell dimensions - width:	520 mm
Cell dimensions - depth:	540 mm
Cell dimensions - height:	400 mm
Rinse temperature:	60-85 °C
External dimensions, Width:	572 mm
External dimensions, Depth:	623 mm
External dimensions, Height:	830 mm
Packaging size (WxDxH):	740x670x1020 mm

Performance table (norm EN IEC 63136:2019)

Tested wash cycle:	myEco
Average cycle time (Tc), sec.:	503
Power ready-to-use mode (Pu), kW:	0.26
Energy consumption for initial fill (Es), kWh:	1.37
Water consumption for initial fill (Vs), l:	21.5
Number of plates per rack:	18
Cleaning performance (xclean), %:	93.4
Resoiling performance (xres):	0.7
Average energy consumption (Ec), kWh:	0.26
Average water consumption (Vc), l:	1.89
Average program time (Tpr), sec.:	318

Sustainability

Noise level:	<70 dBA
Package type:	Box on pallet

The company reserves the right to make modifications to the products without prior notice. All information correct at time of printing.