Modular Cooking Line

EVO700 6-Burner Gas Boiling Top



372004 (Z7GCGL6C00)
6-burner (5,5 kW each) gas boiling top

Main Features

- Burners to feature flame regulator.
- Flame failure device on each burner protects against gas leakage when accidental extinguishing of the flame occurs.
- Gas appliance supplied for use with natural or LPG gas, conversion jets supplied as standard.
- IPx4 water protection.
- Large sized pan support in cast iron (stainless steel as option) with long center fins to allow the use of the largest down to the smallest pans.
- Protected pilot light.
- The six 5.5 kW high efficiency flower flame burners allow the flame to adapt to different size pans.
- Unit to be mounted on open base cupboards, bridging supports or cantilever systems.
- Pan supports in cast iron are washable in a dishwasher.
- Suitable for countertop installation.

Construction

- Model has right-angled side edges to allow flush fitting joints between units, eliminating gaps and possible dirt traps.
- One piece pressed 1.5 mm work top in Stainless steel.
- All exterior panels in Stainless Steel with Scotch Brite finishing.

The company reserves the right to make modifications to the products without prior notice. All information correct at time of printing.

Optional Accessories

PNC Code	Description
Bridge supports	
206139	Support for bridge type installation, 1200 mm
206140	Support for bridge type installation, 1400 mm
206141	Support for bridge type installation, 1600 mm
Burner grids, plates, supports	
206260	Single burner smooth plate for direct cooking - fits frontal burners only
206261	Single burner ribbed plate for direct cooking- fits frontal burners only
206264	Single burner radiant plate for pan support
206297	Stainless steel grid for 2 burners
206363	Wok pan support for open burners (EVO700/900)
Chimney upstands	
206306	Chimney upstand, 1200 mm
Gas nozzles	
206387	Kit town gas nozzles (G150) for EVO700 gas range
206460	Kit G.25.3 (NI) gas nozzles for 700 top and - freestanding on oven - gas cookers
Handrails	
206191	Frontal handrail 1200 mm
206192	Frontal handrail 1600 mm
206240	Right and left side handrails
Installation solutions	
206086	Junction sealing kit
Other accessories	
927225	Pressure regulator for gas units
Panels	
206320	2 side covering panels, height 250 mm, depth 700 mm
Water taps	
206289	Water column with swivel arm (water column extension not included)
206291	Water column extension

The company reserves the right to make modifications to the products without prior notice. All information correct at time of printing.

Technical specifications

Gas	
Gas Power:	33 kW
Standard gas delivery:	Natural Gas G20 (20mbar)
Gas Type Option:	LPG;Town
Gas Inlet:	1/2"
Key Information:	
Net weight:	55 kg
Shipping weight (gross):	68 kg
Shipping height:	520 mm
Shipping width:	820 mm
Shipping depth:	1300 mm
Shipping volume:	0.55 m³
Front Burners Power:	5.5 - 5.5 kW
Back Burners Power:	5.5 - 5.5 kW
Middle Burners Power:	5.5 - 0/5.5 - 0 kW
Certification group:	N7CG
Back Burners Dimension - mm	Ø 60 Ø 60
Front Burners Dimension - mm	Ø 60 Ø 60
Middle Burners Dimension - mm	Ø 60 Ø 60

Front

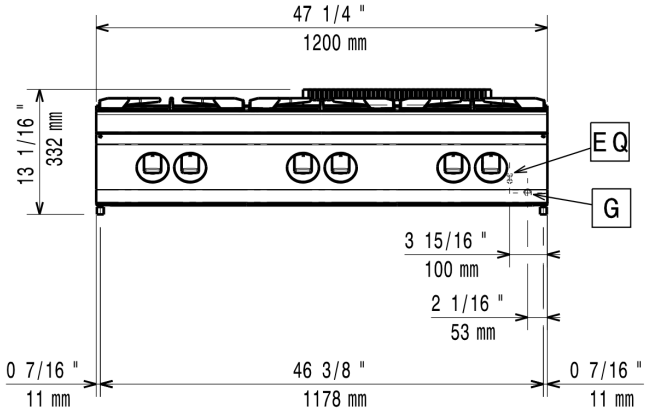

Side

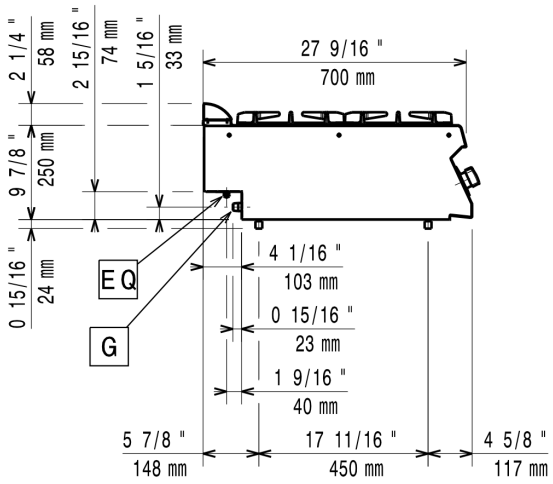

Top

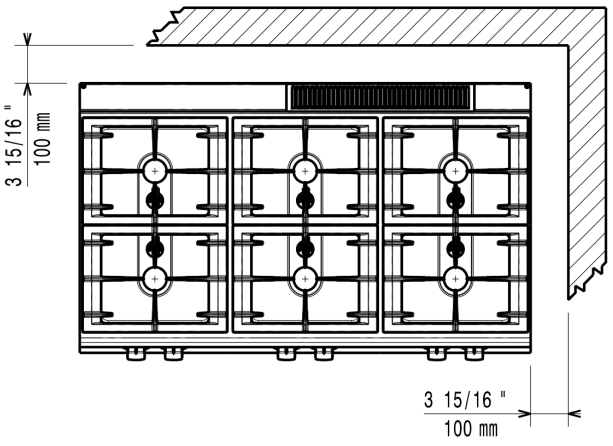

G = Gas connection