Electrical and Gas Convection Oven

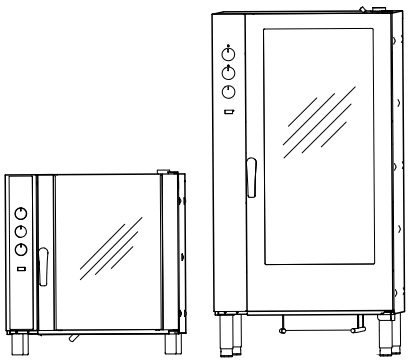

EN User manual *

*Original instructions

595406100- 2026.10

Foreword

Read the following instructions, including the warranty terms before installing and using the appliance.

Visit our website www.electroluxprofessional.com and open the Support section to:

Register your product

Get hints & tips of your product, service and repair information

The installation, use and maintenance manual (hereinafter Manual) provides the user with information necessary for correct and safe use of the appliance.

The following must not be considered a long and exacting list of warnings, but rather a set of instructions suitable for improving appliance performance in every respect and, above all, preventing injury to persons and animals and damage to property due to improper operating procedures.

All persons involved in appliance transport, installation, commissioning, use and maintenance, repair and disassembly must consult and carefully read this manual before carrying out the various operations, in order to avoid wrong and improper actions that could compromise the appliance's integrity or endanger people. Make sure to periodically inform the user regarding the safety regulations. It is also important to instruct and update personnel authorised to operate on the appliance, regarding its use and maintenance.

The manual must be available to operators and carefully kept in the place where the appliance is used, so that it is always at hand for consultation in case of doubts or whenever required.

If, after reading this manual, there are still doubts regarding appliance use, do not hesitate to contact the Manufacturer or the authorised Service Centre to receive prompt and precise assistance for better operation and maximum efficiency of the appliance. During all stages of appliance use, always respect the current regulations on safety, work hygiene and environmental protection. It is the user's responsibility to make sure the appliance is started and operated only in optimum conditions of safety for people, animals and property.

IMPORTANT

- The manufacturer declines any liability for operations carried out on the appliance without respecting the instructions given in this manual.
- The manufacturer reserves the right to modify the appliances presented in this publication without notice.
- No part of this manual may be reproduced.
- This manual is available in digital format by:
  - contacting the dealer or reference customer care;
  - downloading the latest and up to date manual on the web site www.electroluxprofessional.com;
- The manual must always be kept in an easily accessed place near the appliance. Appliance operators and maintenance personnel must be able to easily find and consult it at any time.

Contents

A WARNING AND SAFETY INFORMATION 4
A.1 General information 4
A.2 Personal protection equipment 5
A.3 General safety 5
A.4 Protection devices installed on the appliance 6
A.5 Safety signs to be placed on the appliance or near its area 7
A.6 Reasonably foreseeable improper use 7
A.7 Residual risks 8
A.8 Appliance cleaning 8
A.9 Preventive Maintenance 9
A.10 Parts and accessories 9
A.11 Precautions for use and maintenance 9
A.12 Appliance maintenance 9
B WARRANTY 10
B.1 Warranty terms and exclusions 10
C GENERAL INFORMATION 10
C.1 Introduction 10
C.2 Intended use and restrictions 10
C.3 Testing and inspection 10
C.4 Copyright 10
C.5 Keeping the manual 10
C.6 Recipients of the manual 10
C.7 Definitions 11
C.8 Responsibility 11
D NORMAL MACHINE USE 11
D.1 Characteristics of personnel enabled to operate on the appliance 11
D.2 Basic requirements for appliance use 11
E PRODUCT DESCRIPTION 11
E.1 Instruction for use 11
E.2 Overview Table top models 12
E.3 Overview Free Standing models 13
E.4 Control panel 13
F OPERATING 15
F.1 Electrical models 15
F.1.1 Switch the oven ON 15
F.1.2 Switch the oven OFF 15
F.2 Gas models 15
F.2.1 Switch the oven ON 15
F.2.2 Switch the oven OFF 15
F.3 Cooking cycles 15
F.3.1 “Continuous heating“ cycle 15
F.3.2 Heating cycle with humidification 15
F.3.3 “Dry heating“ cycle 16
F.3.4 Rapid oven cooling 16
F.4 Cooking with temperature probe 16
G OVEN CARE 16
G.1 Care information 16
G.2 Cleaning introduction 16
G.3 Cooking chamber 17
G.4 Deeper cleaning 17
G.4.1 Air diffuser 17
G.4.2 Aspiration panel 17
G.5 Chamber glass door 18
G.6 Drip tray under cooking chamber 18
G.7 Chamber drain pipe 18
G.8 Food probe 18
G.9 Other surfaces 18
G.10 Periods of non-use 19
G.11 Replacing wear and tear components 19
G.12 Repair and extraordinary maintenance 19
G.13 Maintenance intervals 19
G.14 Changing the oven light bulb 19
H TROUBLESHOOTING 20
H.1 Troubleshooting guide 20
H.1.1 Servicing 21

A WARNING AND SAFETY INFORMATION

A.1 General information

To ensure safe use of the appliance and a proper understanding of the manual it is necessary to be familiar with the terms and typographical conventions used in the documentation. The following symbols are used in the manual to indicate and identify the various types of hazards:

WARNING
Danger for the health and safety of operators.

WARNING
Danger of electrocution - dangerous voltage.

CAUTION
Risk of damage to the appliance or the product.

IMPORTANT
Important instructions or information on the product

Equipotentiality

Read the instructions before using the appliance

Clarifications and explanations

- Incorrect installation, servicing, maintenance, cleaning or modifications to the unit may result in damage, injury or death.
- Only specialised personnel are authorised to operate on the appliance.
- This appliance is to be intended for commercial and collective use, for example in kitchens of restaurants, canteens, hospitals and in commercial enterprises such as bakeries, butcheries, etc., not for continuous mass production of food. Any other use is deemed improper.
- This appliance must not be used by minors and adults with limited physical, sensory or mental abilities or without adequate experience and knowledge regarding its use.
- For your safety do not store or use gasoline or other flammable materials, vapours and liquids in the vicinity of this or any other appliance.
- Do not store explosive substances, such as pressurized containers with flammable propellant, in this appliance.
- Refer to the data given on the appliance’s data plate for relations with the Manufacturer (e.g. when ordering spare parts, etc.).
- When scrapping the appliance, the marking CE must be destroyed.
- Save these instructions carefully for further consultation by the various operators.

A.2 Personal protection equipment

Summary table of the Personal Protection Equipment (PPE) to be used during the various stages of the appliance's service life.

Stage	Protective garments	Safety footwear	Gloves	Glasses	Safety helmet
Transport		●	○	—	○
Handling	—	●	○	—	—
Unpacking	—	●	○	—	—
Installation	—	●	●[1]	—	—
Normal use	●	●	●[2]	—	—
Adjustments	○	●	—	—	—
Routine cleaning	○	●	●[1–3]	○	—
Extraordi-nary cleaning	○	●	●[1–3]	○	—
Maintenance	○	●	○	—	—
Dismantling	○	●	○	○	—
Scrapping	○	●	○	○	—
Key:					
●	**PPE REQUIRED**				
○	**PPE AVAILABLE OR TO BE USED IF NECESSARY**				
—	**PPE NOT REQUIRED**				

1. During these operations, gloves must be cut-resistant. Failure to use the personal protection equipment by operators, specialized personnel or users can involve exposure to harm to health (depending on the model).
2. During these operations, gloves must be heatproof to protect hands from contact with hot food or hot parts of the appliance and/or when removing hot items from it. Failure to use the personal protection equipment by operators, specialised personnel or users can involve exposure to chemical risk and cause possible harm to health (depending on the model).
3. During these operations, gloves must be suitable for contact with chemical substances used (refer to the safety data sheet of the substances used for information regarding the required PPE). Failure to use the personal protection equipment by operators, specialized personnel or users can involve exposure to chemical risk and cause possible harm to health (depending on the model).

A.3 General safety

- The appliances are provided with electric and/or mechanical safety devices for protecting workers and the appliance itself.
- Never operate the appliance, removing, modifying or tampering with the guards, protection or safety devices.
- Do not make any modifications to the parts supplied with the appliance.
- Several illustrations in the manual show the appliance, or parts of it, without guards or with guards removed. This is purely for explanatory purposes. Do not use the appliance without the guards or with the protection devices deactivated.

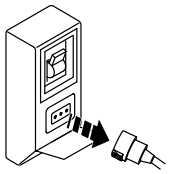
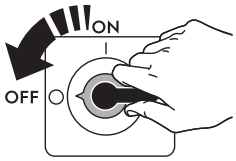

Disconnect the appliance from the power supply before carrying out any installation, assembly, cleaning or maintenance procedure.

- Do not remove, tamper with or make illegible the CE marking, the safety, danger and instruction signs and labels on the appliance.
- The A-weighted emission sound pressure level does not exceed 70 dB(A).
- Do not use products (even if diluted) containing chlorine (sodium hypochlorite, hydrochloric or muriatic acid, etc.) to clean the appliance or the floor under it.
- Carefully avoid exposure of the equipment to ozone - do not use ozonizers in the rooms where the equipment is installed.
- Do not spray aerosols in the vicinity of this appliance while it is in operation.
- Do not place flammable liquids (e.g. spirits) inside the oven during operation.
- Never check for leaks with an open flame.
- For gas models, do not connect the appliances to networks containing gases containing carbon monoxide or other toxic components.
- Install the appliance under conditions of adequate ventilation in order to provide a suitable air change per hour. Make sure that the ventilation system, whatever it is, always remains operational and efficient for the entire period of time during which the equipment is operating.
- If the recirculating (condensation or odourless) hood accessory is used, make sure that the ventilation system, whatever it is, is adequate for the installed power, also in accordance with national and local regulations and provisions on air changes.
- Improper ventilation of the oven can be hazardous to the health of the operator; and will result in operational problems, unsatisfactory cooking results, and possible damage to the equipment. Damage sustained as a direct result of improper ventilation OF THE OVEN will not be covered by the Manufacturer's warranty.
- Do not obstruct the flow of combustion and ventilation air.
- When the oven is operating and hot, always open the door with caution to avoid the risk of sudden ejection of hot air or steam.
- The following operations have to be carried out by specialised authorised personnel or Customer Care Service provided with all the appropriate personal protection equipment (A.2 *Personal protection equipment*), tools, utensils and ancillary means, who can ask the manufacturer to supply a servicing manual:
  - Installation and assembly
  - Positioning
  - Electrical connection
  - Appliance cleaning, repair and extraordinary maintenance
  - Appliance disposal
  - Work on electrical equipment
  - Gas installation/connection and gas conversion;

A.4 Protection devices installed on the appliance

Guards

The appliance has:

- fixed guards (e.g. casings, covers, side panels, etc.), fixed to the appliance and/or frame with screws or quick-release connectors that can only be removed or opened with tools;

therefore the user must not remove or tamper with such devices. The Manufacturer declines any liability for damage due to tampering or their non-use;

- interlocked movable guards (door) for access inside the appliance;
- appliance electrical equipment access panels or doors, made from hinged panels openable with tools. The panel or the door must not be opened when the appliance is connected to the power supply.

A.5 Safety signs to be placed on the appliance or near its area

Prohibition	Meaning
	do not remove the safety devices
	do not use water to extinguish fires (placed on electrical parts)
	Keep the area around the appliance clear and free from combustible materials. Do not keep flammable materials in the vicinity of the appliance

Danger	Meaning
	caution hot surface
	danger of electrocution (shown on electrical parts with indication of voltage)
	risk of scalding

A.6 Reasonably foreseeable improper use

Improper use is any use different from that specified in this manual. During appliance operation, other types of work or activities deemed improper and that in general can involve risks for the safety of operators and damage to the appliance are not allowed. Reasonably foreseeable improper use includes:

- lack of appliance maintenance, cleaning and periodical checks;
- structural changes or modifications to the operating logic;
- tampering with the guards or safety devices;
- failure to use personal protection equipment by operators, specialised personnel and maintenance personnel;
- failure to use suitable accessories (e.g. use of unsuitable equipment or ladders);
- keeping combustible or flammable materials, or in any case materials not compatible with or pertinent to the work, near the appliance;
- wrong appliance installation;
- placing in the appliance any objects or things not compatible with its use, or that can damage the appliance, cause injury or pollute the environment;
- climbing on the appliance;

- non-compliance with the requirements for correct appliance use;
- other actions that give rise to risks not eliminable by the Manufacturer.

A.7 Residual risks

The appliance has several risks that were not completely eliminated from a design standpoint or with the installation of adequate protection devices. Nevertheless, through this manual the Manufacturer has taken steps to inform operators of such risks, carefully indicating the personal protection equipment to be used by them. In order to reduce the risks, provide for sufficient spaces while installing the unit.

To preserve these conditions, the areas around the appliance must always be:
- kept free of obstacles (e.g. ladders, tools, containers, boxes, etc.);
- clean and dry;
- well lit.

For the Customer's complete information, the residual risks remaining on the appliance are indicated below: such actions are deemed improper and therefore strictly forbidden.

Residual risk	Description of hazardous situation
Slipping or falling	The operator can slip due to water, any liquid or dirt on the floor
Burns/abrasions (e.g. heating elements, cold pan, cooling circuit plates and pipes)	The operator deliberately or unintentionally touches some components inside the appliance without using protective gloves.
Electrocution	Contact with live parts during maintenance operations carried out with the electrical panel powered
Falling from above	The operator intervenes on the appliance using unsuitable systems to access the upper part (e.g. rung ladders, or climbs on it)
Crushing or injury	The specialised personnel may not correctly fix the control panel when accessing the technical compartment. The panel could close suddenly.
Tipping of loads	When handling the appliance or the packing containing it, using unsuitable lifting systems or accessories or with the unbalanced load
Chemical	Contact with chemical substances (e.g. detergent, rinse aid, scale remover, etc.) without taking adequate safety precautions. Therefore always refer to the safety cards and labels on the products used.
Sudden closure	The operator for normal appliance use could suddenly and deliberately close the lid/door/oven door (if present, depending on the appliance type).

A.8 Appliance cleaning

IMPORTANT
In order to maintain the appliance performance and safeness, the appliance shall be maintained and cleaned.

- Do not touch the appliance with wet hands or feet or when barefoot.
- Use a ladder with suitable protection for work on appliances with high accessibility.

- Put the appliance in safe conditions before starting any cleaning operation.
- Respect the requirements for the various routine and extraordinary maintenance operations. Non-compliance with the instructions can create risks for personnel.
- Do not spray water or use water jets, steam cleaner or high pressure cleaner.

A.9 Preventive Maintenance

In order to ensure the safety and performance of your equipment, it is recommended that service is undertaken by Electrolux Professional SpA authorised engineers every 12 months, in accordance with Electrolux Professional SpA Service Manuals. Please contact your local Electrolux Professional SpA Service Centre for further details.

A.10 Parts and accessories

Use only original accessories and/or spare parts. Failure to use original accessories and/or spare parts will invalidate the original manufacturer warranty and may render the appliance not compliant with the safety standard.

A.11 Precautions for use and maintenance

- Risks mainly of a mechanical, thermal and electrical nature exist in the appliance. Where possible the risks have been neutralised:
  - directly, by means of adequate design solutions.
  - indirectly by using guards, protection and safety devices.
- Any anomalous situations are signalled on the control panel display.
- During maintenance several risks remain, as these could not be eliminated, and must be neutralised by adopting specific measures and precautions.
- Do not carry out any checking, cleaning, repair or maintenance operations on moving parts. Workers must be informed of this prohibition by means of clearly visible signs.
- Make sure to periodically check correct operation of all the safety devices and the insulation of electrical cables, which must be replaced if damaged.

In case of a significant anomaly (e.g. short circuits, wires coming out of the terminal block, motor breakdowns, worn electrical cable sheathing, etc.) the operator for normal appliance use must:

- immediately deactivate the appliance and disconnect all the supplies (electricity, gas, water).

Before carrying out any operation on the appliance, always consult the manual which gives the correct procedures and contains important information on safety.

A.12 Appliance maintenance

- The inspection and maintenance intervals depend on the actual appliance operating conditions and ambient conditions (presence of dust, damp, etc.), therefore precise time intervals cannot be given. In any case, careful and periodical appliance maintenance is advisable in order to minimise service interruptions.
- It is advisable to stipulate a preventive and scheduled maintenance contract with the Customer Care Service.
- Put the appliance in safe conditions before starting any maintenance operation.
- To guarantee appliance efficiency and correct operation, periodical maintenance must be carried out according to the instructions given in the manual.

B WARRANTY

B.1 Warranty terms and exclusions

If the purchase of this product includes warranty coverage, warranty is provided in line with local regulations and subject to the product being installed and used for the purposes as designed, and as described within the appropriate equipment documentation.

Warranty will be applicable where the customer has used only genuine spare parts and has performed maintenance in accordance with Electrolux Professional user and maintenance documentation made available in paper or electronic format.

Electrolux Professional strongly recommends using Electrolux Professional approved cleaning, rinse and descaling agents to obtain optimal results and maintain product efficiency over time.

The Electrolux Professional warranty does not cover:

- service trips cost to deliver and pick up the product;
- installation;
- training on how to use/operate;
- replacement (and/or supply) of wear and tear parts unless resulting from defects in materials or workmanship reported within one (1) week from the failure;
- correction of external wiring;
- correction of unauthorized repairs as well as any damages, failures and inefficiencies caused by and/or resulting from;
  - insufficient and/or abnormal capacity of the electrical systems (current/voltage/frequency, including spikes and/or outages);
  - inadequate or interrupted water supply, steam, air, gas (including impurities and/or other that does not comply with the technical requirements for each appliance);
  - plumbing parts, components or consumable cleaning products that are not approved by the manufacturer;
  - customer's negligence, misuse, abuse and/or non-compliance with the use and care instructions detailed within the appropriate equipment documentation;
  - improper or poor: installation, repair, maintenance (including tampering, modifications and repairs carried out by third parties not authorized) and modification of safety systems;
  - Use of non-original components (e. g.: consumables, wear and tear, or spare parts);
  - environment conditions provoking thermal (e. g. overheating/freezing) or chemical (e. g. corrosion/oxidation) stress;
  - foreign objects placed in- or connected to- the product;
  - accidents or force majeure;
  - transportation and handling, including scratches, dents, chips, and/or other damage to the finish of the product, unless such damage results from defects in materials or workmanship and is reported within one (1) week of delivery unless otherwise agreed;
- product with original serial numbers that have been removed, altered or cannot be readily determined;
- replacement of light bulbs, filters or any consumable parts;
- any accessories and software not approved or specified by Electrolux Professional.

Electrolux Professional warranty will be void and manufacturer shall have no liability related thereto in case of any modification of the product or related hardware/software/programming.

Warranty does not include scheduled maintenance activities (including the parts required for it) or the supply of cleaning agents unless specifically covered within any local agreement, subject to local terms and conditions.

Check on Electrolux Professional website the list of authorized customer care.

C GENERAL INFORMATION

WARNING
Refer to "*WARNING and Safety Information*".

C.1 Introduction

This manual contains information relevant to various appliances. The product images in this guide are only an example.

The drawings and diagrams given in the manual are not in scale. They supplement the written information with an outline, but are not intended to be a detailed representation of the appliance supplied.

The numerical values given on the appliance installation diagrams refer to measurements in millimeters and/or inches.

C.2 Intended use and restrictions

This appliance is designed for cooking food. It is intended for collective use.

Any other use is deemed improper.

NOTE!
The manufacturer declines any liability for improper use of the product.

C.3 Testing and inspection

Our appliances have been designed and optimized, with laboratory testing, in order to obtain high performance and efficiency.

IMPORTANT
For 20 grids models only: the oven shall be used with the supplied trolley or with the appropriate ones listed in the accessory catalogue.

The appliance is shipped ready for use.

Passing of the tests (visual inspection - gas/electrical test - functional test) is guaranteed and certified by the specific enclosures.

C.4 Copyright

This manual is intended solely for consultation by the operator and can only be given to third parties with the permission of Electrolux Professional SpA.

C.5 Keeping the manual

The manual must be carefully kept for the entire life of the appliance, until scrapping. The manual must stay with the appliance in case of transfer, sale, hire, granting of use or leasing.

C.6 Recipients of the manual

This manual is intended for:

- the employer of appliance users and the workplace manager;
- operators for normal appliance use;
- specialised personnel - Customer Care service (see service manual).

C.7 Definitions

Listed below are the definitions of the main terms used in the manual. It is advisable to read them carefully before use.

Operator	appliance installation, adjustment, use, maintenance, cleaning, repair and transport personnel.
Manufacturer	Electrolux Professional SpA or any other service centre authorised by Electrolux Professional SpA.
Operator for normal appliance use	an operator who has been informed and trained regarding the tasks and hazards involved in normal appliance use.
Customer Care service or specialised personnel	an operator instructed/trained by the Manufacturer and who, based on his professional and specific training, experience and knowledge of the accident-prevention regulations, is able to appraise the operations to be carried out on the appliance and recognise and prevent any risks. His professionalism covers the mechanical, electrotechnical and electronics fields etc.
Danger	source of possible injury or harm to health.
Hazardous situation	any situation where an operator is exposed to one or more hazards.
Risk	a combination of probabilities and risks of injury or harm to health in a hazardous situation.
Protection devices	safety measures consisting of the use of specific technical means (guards and safety devices) for protecting operators against risks.
Guard	an element of a appliance used in a specific way to provide protection by means of a physical barrier.
Safety device	a device (other than a guard) that eliminates or reduces the risk; it can be used alone or in combination with a guard.
Customer	the person who purchased the appliance and/or who manages and uses it (e. g. company, entrepreneur, firm).
Electrocution	an accidental discharge of electric current on a human body.

C.8 Responsibility

The Manufacturer declines any liability for damage and malfunctioning caused by:

- non-compliance with the instructions contained in this manual;
- repairs not carried out in a workmanlike fashion, and replacements with parts different from those specified in the spare parts catalogue (the fitting and use of non-original spare parts and accessories can negatively affect appliance operation and invalidates the original manufacturer warranty);
- operations carried out by non-specialised personnel;
- unauthorized modifications or operations;
- missing, lack or inadequate maintenance;
- improper appliance use;
- unforeseeable extraordinary events;
- use of the appliance by uninformed and / or untrained personnel;
- non-application of the current provisions in the country of use, concerning safety, hygiene and health in the workplace.

The Manufacturer declines any liability for:

- damage caused by arbitrary modifications and conversions carried out by the user or the Customer;
- inaccuracies contained in the manual, if due to printing or translation errors.

The employer, workplace manager or service technician are responsible for identifying and choosing adequate and suitable personal protection equipment to be worn by operators, in compliance with regulations in force in the country of use.

Any supplements to the installation, use and maintenance manual the Customer receives from the Manufacturer will form an integral part of the manual and therefore must be kept together with it.

D NORMAL MACHINE USE

D.1 Characteristics of personnel enabled to operate on the appliance

The Customer must make sure the personnel for normal appliance use are adequately trained and skilled in their duties.

The operator must:

- read and understand the manual;
- receive adequate training and instruction for their duties in order to operate safely;
- receive specific training for correct appliance use.

IMPORTANT
The Customer must make sure his personnel have understood the instructions received and in particular those regarding work hygiene and safety in use of the appliance.

D.2 Basic requirements for appliance use

- Knowledge of the technology and specific experience in operating the appliance.
- Adequate general basic education and technical knowledge for reading and understanding the contents of the manual, including correct interpretation of the drawings, signs and pictograms.
- Sufficient technical knowledge for safely performing his duties as specified in the manual.
- Knowledge of the regulations on work hygiene and safety.

E PRODUCT DESCRIPTION

E.1 Instruction for use

Before switching on the appliance, carefully read this instructions manual which contains important information about correct and optimum use of the appliance.

For further information about the oven's features and cooking performance, consult your local dealer.

- Do not place pans or utensils on top of the oven to avoid obstructing the fume and steam exhaust ducts.
- Some models are equipped with a temperature probe which measures the core temperature of products.

  This is a precision instrument which must be handled with the utmost care to avoid knocks or damage caused by abrupt insertion or removal of the lead (particularly when using trolley-mounted units).

NOTE!
The guarantee does not cover damage to the temperature probe caused by improper usage.

- When using cooking cycles with humidification, do not exceed cooking temperatures of 200-210℃, which might otherwise damage the oven chamber seals.
- When using the oven, leave a gap of at least 40 mm between each container to facilitate the correct circulation of hot air inside the oven.

NOTE!
Do not salt foods inside the oven chamber, particularly during cooking cycles with humidification.
Do not cook with flammable liquids such as high-alcohol spirits.

IMPORTANT
After the installation of 6, 10 and 20 grids ovens (stacking installation with electrical models included) is carried out, check at which height the upper trays are placed in the oven. If required, place the following sticker (supplied) on the front of the oven and ***at a height of 1,60 m or higher above the floor***.

CAUTION
To avoid scalding, do not use recipients containing liquids (or products that become liquid with cooking) in shelves positioned at levels higher than 1,6 m above the floor. This is to prevent spilling during handling.

E.2 Overview Table top models

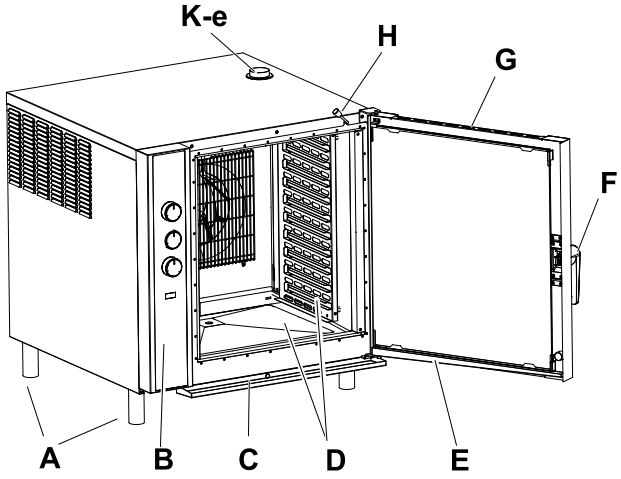

ELECTRICAL model 10GN 1/1

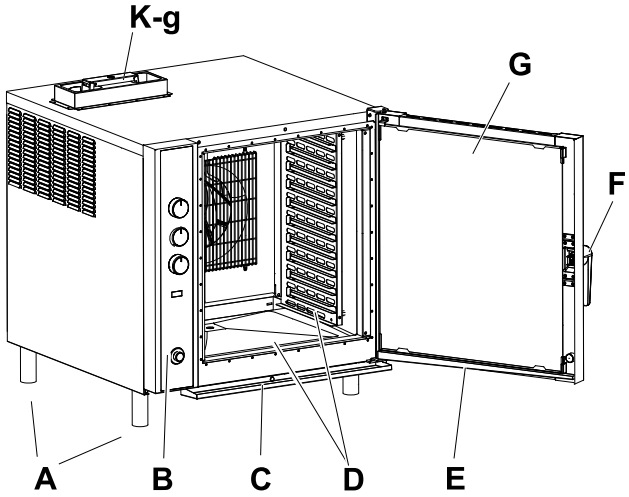

GAS model 10GN 1/1

A	Feet
B	Control panel
C	Drip tray collector under cooking chamber
D	Oven chamber and air diffusers
E	Under door drip tray collector (if delivered with your model or available as accessory)
F	Door handle (shape depending on the model)
G	Double glass door
H	Lever for vent valve opening/closing (Electrical models ONLY)
K-e	Cooking chamber exhaust (Electrical models ONLY)
K-g	Gas exhaust (Gas models ONLY)

E.3 Overview Free Standing models

ELECTRICAL model 20 GN 1/1

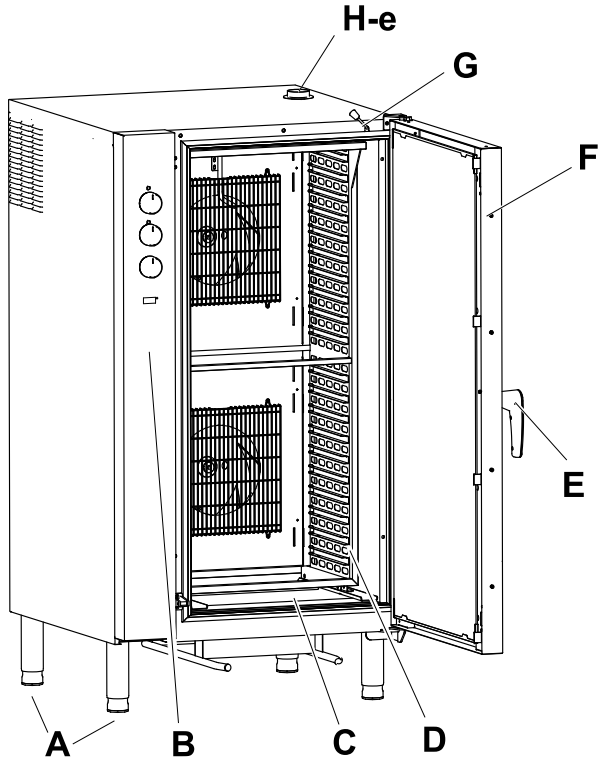

GAS model 20 GN 1/1

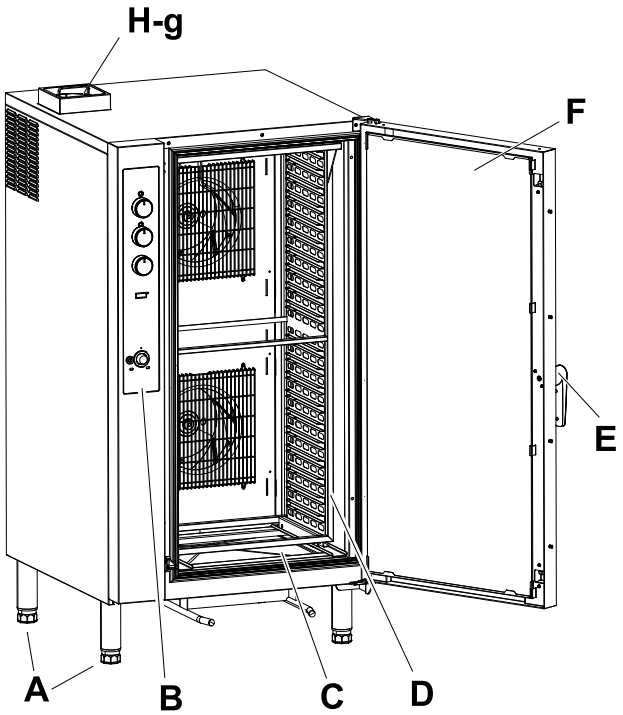

A	Feet
B	Control panel
C	Oven chamber
D	Rack structure (available as accessory)
E	Door handle (shape depending on the model)
F	Double glass door
G	Lever for vent valve opening/closing (ELECTRICAL models ONLY)
H-e	Cooking chamber exhaust (ELECTRICAL models ONLY)
H-g	Gas exhaust (GAS models ONLY)

E.4 Control panel

⚠ **WARNING**

Refer to “*WARNING and Safety Information*“.

ELECTRICAL MODELS – Figure A	GAS MODELS – Figure B
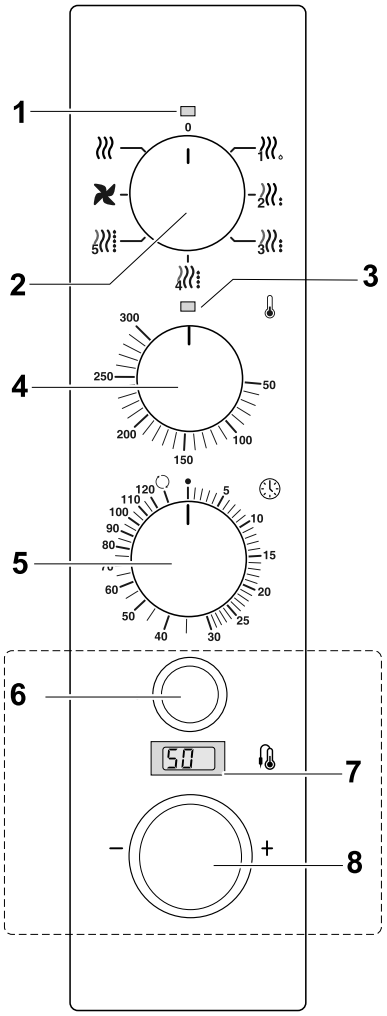	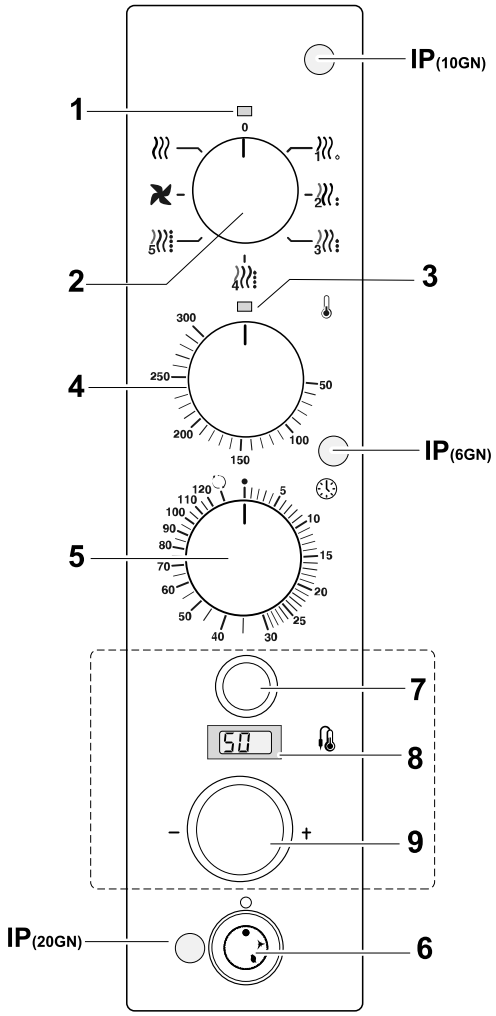

NOTE!
Drawing are purely representative.

ELECTRICAL models – Figure A

1. Power on indicator led
2. Cooking cycle selector
3. Thermostat on indicator led
4. Thermostat: temperature programming range: 50 - 300°C
5. Timer: time programming range: 0 - 120 mins, “∞“

Probe items (if delivered with your model or available as accessory):

6. Temperature probe selection switch (deactivates the timer if activated and displays the probe temperature on display “7“).
7. Display:
   - shows the programmed core temperature.
   - shows the actual core temperature detected by the temperature probe during the cooking cycle.
8. Product core temperature setting knob: from 50 to 99 °C

GAS models – Figure B

1. Power on indicator led
2. Cooking cycle selector
3. Thermostat on indicator led
4. Thermostat: temperature programming range: 50 - 300°C
5. Timer: time programming range: 0 - 120 mins, “∞“
6. Gas knob

- **IP** - Inspection port for flame ignition). Its position changes according to the model.

Probe items (if delivered with your model or available as accessory):

7. Temperature probe selection switch (deactivates the timer if activated and displays the probe temperature on display “8“).
8. Display:
   - shows the programmed core temperature.
   - shows the actual core temperature detected by the temperature probe during the cooking cycle.
9. Product core temperature setting knob: from 50 to 99 °C

F OPERATING

F.1 Electrical models

F.1.1 Switch the oven ON

Refer to figure **A** for ELECTRICAL models:

1. Turn the cooking cycle knob “2“ to position .
   The indicator led “1“ illuminates to indicate that the appliance is powered up.
2. Turn the cooking cycle knob “2“ to the required cooking cycle (see F.3 *Cooking cycles* paragraph).
3. Set the cooking temperature using thermostat knob “4“;
4. Set the cooking time using timer knob “5“.
   Indicator led “3“ illuminates to indicate activation of the cooking cycle;

At the end of the cooking cycle the oven emits an acoustic signal for about one minute;

WARNING
Risk of burns and/or sudden ejection of hot air or steam. Always open the door with caution.

NOTE!
Before running a cooking cycle with humidification, preheat the oven chamber to about 100 °C with the dry heating cycle .

F.1.2 Switch the oven OFF

1. Turn selector knob “3“ back to position “0“.
   Indicator led “1“ goes out.
2. Close the water shut-off taps.
3. Disconnect the appliance from the main power supply at the isolating switch.

F.2 Gas models

F.2.1 Switch the oven ON

Refer to figure **B** for GAS models:

1. Turn the cooking cycle knob “2“ to position .
   The indicator led “1“ illuminates to indicate that the appliance is powered up.
2. Press and turn gas knob “6“ to position (pilot ignition).
   Hold the knob pressed in for a few seconds until the pilot flame ignites and then release.
3. Make sure the flame is correctly lit by looking through inspection port “IP“ (the position depends on the model).
   If the flame has gone out repeat the above operation.
4. Turn gas knob “6“ to position (burner setting).
5. Turn the cooking cycle knob “2“ to the required cooking cycle (see F.3 *Cooking cycles* paragraph).
6. Set the cooking temperature using thermostat knob “4“;
7. Set the cooking time using timer knob “5“.
   Indicator led “3“ illuminates to indicate activation of the cooking cycle;

At the end of the cooking cycle the oven emits an acoustic signal for about one minute;

WARNING
Risk of burns and/or sudden ejection of hot air or steam. Always open the door with caution.

NOTE!
Before running a cooking cycle with humidification, preheat the oven chamber to about 100 °C with the dry heating cycle .

F.2.2 Switch the oven OFF

Turning the oven off:

1. Turn selector knob “2“ back to position “0“.
   Indicator led “1“ goes out.
2. Extinguish the pilot flame by turning gas knob “6“ back to position .
3. Close the gas and water shut-off taps.
4. Disconnect the appliance from the main power supply at the isolating switch.

F.3 Cooking cycles

- Switch the appliance on.
  The indicator led above the knob is on.

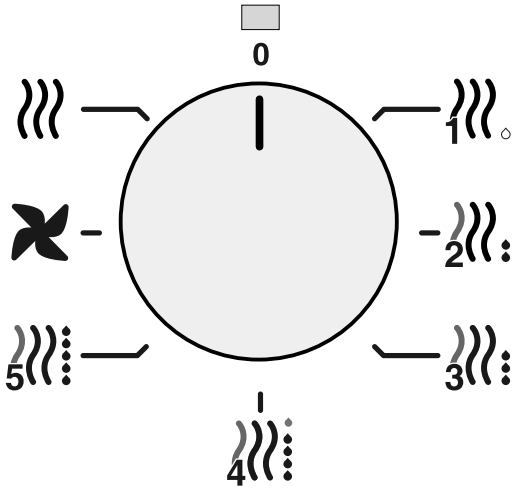

The cooking cycle selector has the following positions:

- Heating with low humidification
- Heating with medium-low humidification
- Heating with medium humidification
- Heating with medium-high humidification
- Heating with high humidification
- Rapid cooling fan cycle
- Dry heating cycle

F.3.1 “Continuous heating“ cycle

- First turn TEMPERATURE knob to the required temperature setting;
- Turn TIMER knob to position .

F.3.2 Heating cycle with humidification

Make sure the water shut-off tap is open. To increase the moisture level inside the oven, during the cooking cycle:

- Turn cooking cycle knob to the required cooking cycle;
- Set the required temperature;
- Set the time settings or the product core temperature for the selected cycle.

F.3.3 “Dry heating“ cycle

To program a dry cooking cycle:

1. Turn cycle selector knob to position ;
2. Set the required cooking temperature;
3. Set the required cooking time.

F.3.4 Rapid oven cooling

To rapidly cool down the oven after a cooking cycle, proceed as follows:

1. Open the oven door;
2. Turn cooking cycle knob to position .

F.4 Cooking with temperature probe

The temperature probe (if available) is used to monitor the core temperature of products.

This function may be used with cooking cycles , , , , and .

NOTE!
The temperature probe is a precision instrument. It must therefore be handled with the utmost care to avoid knocks or damage caused by abrupt insertion or removal of the lead (particularly when using trolley-mounted units).

IMPORTANT
The guarantee does not cover damage to the core temperature probe caused by improper usage.

1. Switch the appliance on by turning the COOKING CYCLE selector to the required cycle.
   The corresponding green indicator led is on.
2. Set the TIMER knob to continuous mode as described in F.3.1 *“Continuous heating“ cycle* paragraph;

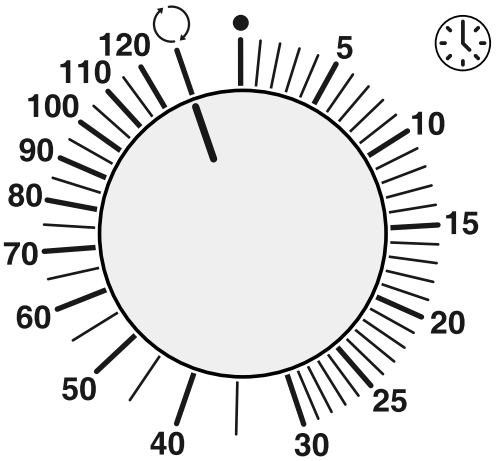

3. Remove the temperature probe from its holder and insert in the product, taking care not to force it.
4. Make sure the sensor head is positioned at the heart of the product;
5. Close the oven door;
6. Press the TEMPERATURE PROBE selector switch to activate it;
   (this disables the TIMER if programmed and shows the probe temperature on display)
7. Turn PRODUCT TEMPERATURE setting knob until the target core temperature is displayed on display.

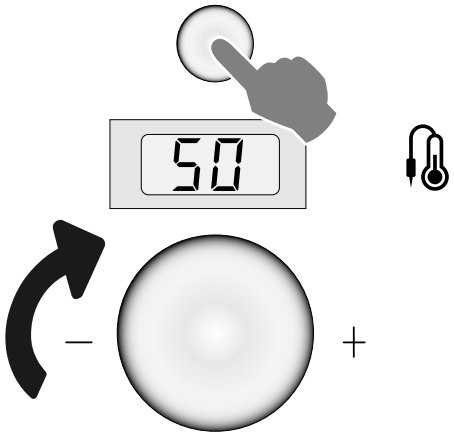

The cooking cycle now starts and continues until the actual core temperature of the product shown on display reaches the programmed core temperature.
The programmed core temperature may also be changed during the cycle.

At the end of the cycle, the oven emits an acoustic signal for about one minute.

G OVEN CARE

WARNING
Refer to “*WARNING and Safety Information*“.

G.1 Care information

Care operations have to be carried out by the owner and/or user of the appliance.

IMPORTANT
Problems resulting from poor or lack of care as hereinafter described will not be covered by the warranty.

G.2 Cleaning introduction

WARNING
Use heatproof gloves when operating with hot parts.

To help reduce environmental impact, we recommend using Electrolux Professional cleaning products designed with sustainability and biodegradability in mind.

If another type of detergent is used, carefully follow the producer's instructions and observe the safety rules given in the information sheets provided with the product or substance.

Rinse and dry thoroughly.

CAUTION

- Do not use solvent-based detergents (e. g. trichloro-ethylene) or abrasive powders for cleaning.
- Do not use chemical products such as sodium hypo chlorite (bleaching powder), hydrochloric acid (muriatic acid) or other acids to clean the surfaces of the appliance.

  Do not use the above products even for cleaning zones next to the appliance, their vapours can damage it.
- Do not use steel brushes, steel wool, copper cloths, sand-based or similar products for cleaning.

G.3 Cooking chamber

WARNING

Disconnect the appliance from the main power supply at the isolating switch and close the water.

Clean the oven **at least once every working day**: in case of heavy use, more frequent cleaning is strongly recommended.

- Clean the cooking chamber with a non-aggressive detergent for oven, following the directions given by the product supplier.

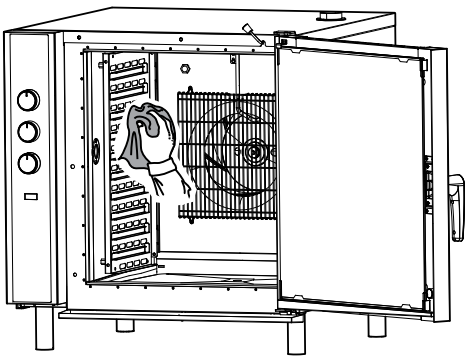

G.4 Deeper cleaning

To facilitate the task of cleaning the oven, remove:

- the trolley-mounted unit runners in the oven base (if fitted, depending on your model);
- the lateral air diffusers supporting the oven trays;
- the aspiration panel.

G.4.1 Air diffuser

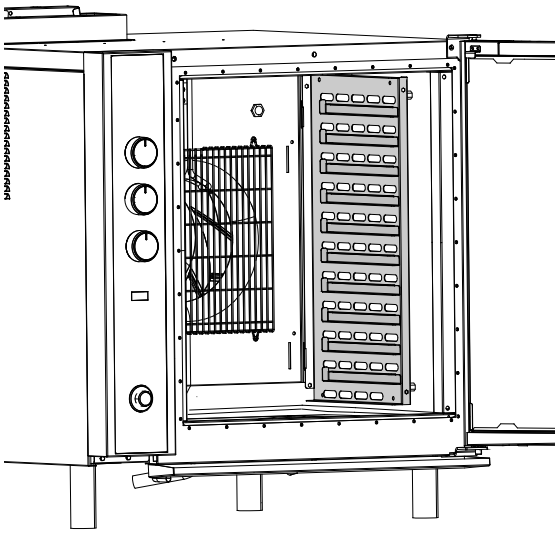

To remove the air diffuser inside the oven, proceed as follows:

1. lift the diffuser;
2. rotate it so to release the two front pins;
3. detach the hooks from the slots in the fan panel;
4. remove the diffuser.

To remount the diffuser, simply repeat the above procedure in reverse order.

G.4.2 Aspiration panel

To remove aspiration panel ("A") inside the oven:

- remove the lateral air diffusers;
- undo the two fixing screws "D";
- if necessary, loosen the corresponding fixing screws to lower humidifier "E";
- lift the panel and detach from the two bolts at the bottom of the oven. In the figure above the two arrows on the panel indicate the position of the holes for the bolts.

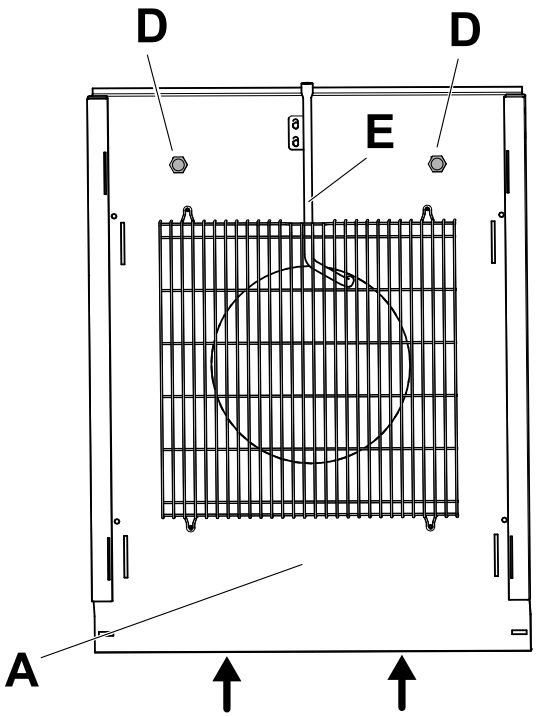

To remount the aspiration panel, simply repeat the above procedure in reverse order.

G.5 Chamber glass door

NOTE!
Only clean the panels when the glass is cool and never use abrasive cloths or detergents.

1. Clean the internal glass door using a glass product as shown in the figure.

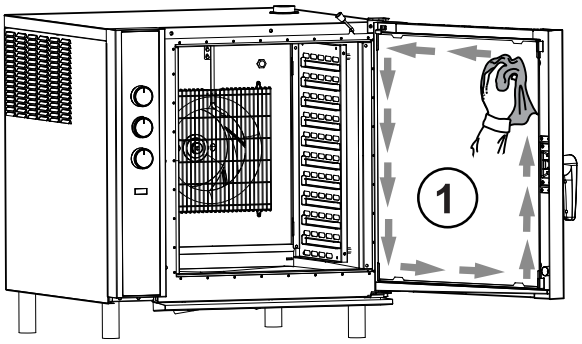

2. Press upper and lower clips to release the internal glass door. Open it (as far as its opening allows) to reach all the interspace between the internal and external glass.

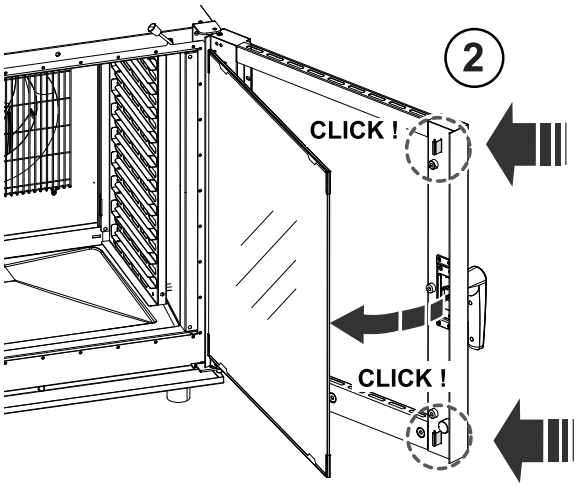

3. Clean all glass sides of both doors. Clean then the interspace surfaces between the doors.

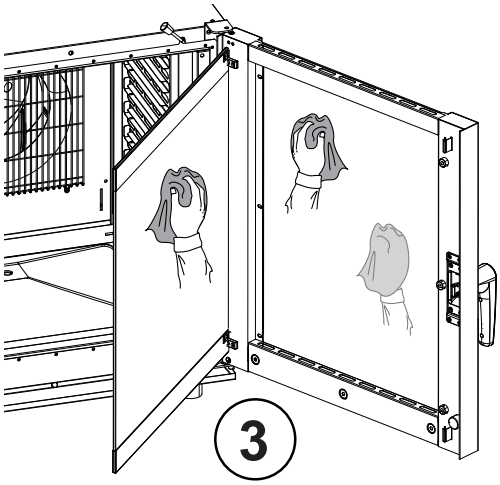

G.6 Drip tray under cooking chamber

The plastic drip collector at the bottom of the cooking chamber façade ensures that the steams that condense as soon as the door is opened are collected and discharged.

In case of heavy greasy cooking, use a degreaser chemical every two days; in case of lighter greasy cooking, use a degreaser chemical at least once a week.

Clean the small drain pipe and check for obstructions that may prevent the water from draining.

If necessary, use a small pipe cleaner with nylon bristles.

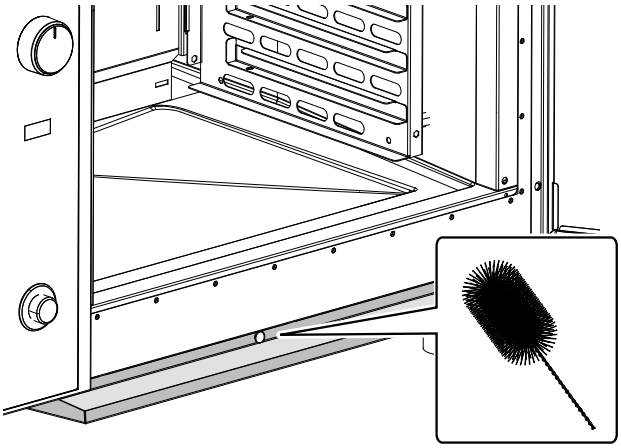

G.7 Chamber drain pipe

Residues released during cooking can encrust the external discharge pipe. It is therefore essential to check the efficiency of the discharge and to clean the drain pipe as soon as there are signs of obstruction.

Periodically clean the drain pipe **from inside the oven**.

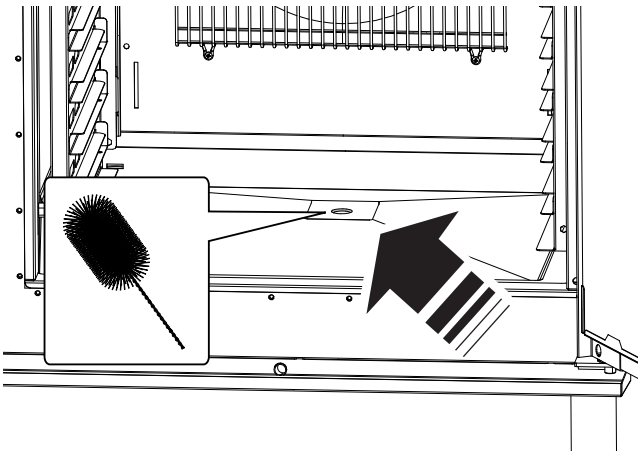

If necessary, use a pipe cleaner with nylon bristles.

G.8 Food probe

Residues released during cooking, despite regular cleaning of the cooking chamber, can encrust the food probe, altering the temperature detection.

To ensure optimal operation of the oven with the food probe, it is recommended to clean the food probe manually **every day**, using lukewarm water and neutral soap, avoiding tying the cable of the probe and rinsing with water.

IMPORTANT
Pay particular attention when handling the probe; remember that it is a sharp object, therefore handle it very carefully, even during cleaning.

G.9 Other surfaces

- Clean external glass, metal and plastic parts only with non-aggressive detergents. Stop immediately using those products if detecting any visual or tactile characteristic change on surfaces and thoroughly rinse with water (examples: glass becoming mat/scratched/other, or plastic discoloring/melting/other, or metal showing rust/stains/scratches). Carefully dry after rinsing.

IMPORTANT
As for the plastic handle, do not use detergents containing sodium hypochlorite.

- Clean the stainless steel parts every day using lukewarm neutral soapy water;
  Rinse with plenty of water and dry thoroughly.
- Do not clean the stainless steel with steel wool, brushes or scrapers in common steel, as they could deposit ferrous particles which oxidize, causing rust spots;

G.10 Periods of non-use

If the appliance is not going to be used for some time, take the following precautions:

- close the water supply tap(s), if present;
- close the gas valves;
- disconnect the power supply or remove the plug from the power socket, if present;
- clean the cabinet, going over all the stainless steel surfaces vigorously with a rag moistened with paraffin oil to create a protective film;
- periodically air the premises.

IMPORTANT
The warranty does not cover any damages caused by ice formations in the appliance pipes.

G.11 Replacing wear and tear components

There are parts, whose damage happens because of the ordinary use during a period, which are not covered by the manufacturer warranty.

G.12 Repair and extraordinary maintenance

NOTE!
Repair and extraordinary maintenance have to be carried out by specialised authorised personnel, who can ask the manufacturer to supply a servicing manual.

G.13 Maintenance intervals

It is advisable to carry out the checks with the frequency given in the following table:

Maintenance, inspections, checks and cleaning	Frequency	Responsability
Ordinary cleaning • general cleaning of appliance and surrounding area	• Daily	• Operator
Mechanical protection devices • check their condition and for any deformation, loosening or removed parts	• Every 6 months	• Service
Control • check the mechanical parts, for cracks or deformations, tightening of screws: check the readability and condition of words, stickers and symbols and restore if necessary	• Yearly	• Service
Appliance structure • tightening of main bolts (screws, fixing systems, etc.) of appliance	• Yearly	• Service
Safety signs • check the readability and condition of safety signs	• Yearly	• Service
Electrical control panel • check the electrical components installed inside the electrical control panel. Check the wiring between the electrical panel and appliance parts	• Yearly	• Service
Electrical connection cable • check the connection cable (replace if necessary)	• Yearly	• Service
General appliance overhaul • check all components, electrical equipment, corrosion, pipes…	Every 10 years[1]	• Service

1. The appliance is designed and built for a duration of about 10 years. After this period of time (from commissioning) the appliance must undergo a general inspection and overhaul.

G.14 Changing the oven light bulb

If the oven light bulb burns out, proceed as follows:

1. Disconnect the appliance from the main power supply;
2. Unscrew the four screws fixing ring nut “A“ to the light fixture and remove glass shield “V“ together with seal “G“;

3. Remove halogen lamp “L“ and replace with one with the same characteristics (12V- 20W - 300°C);
   Use a clean piece of paper/cloth to prevent direct contact with your fingers.
4. Make sure the safety glass is correctly fitted inside the seal and remount.
5. Lubricate the seal “G“ with non-toxic silicon grease;
6. Then fix the ring nut using the four screws.

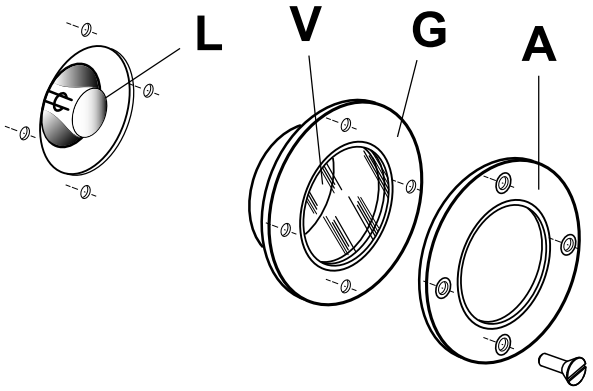

H TROUBLESHOOTING

H.1 Troubleshooting guide

NOTE!
In case of malfunctioning:

1. Disconnect the appliance from the main power supply;
2. Switch off the safety circuit breaker ahead of the appliance;
3. Close the gas in gas models and water taps;
4. Contact the After-Sales Service with trained personnel and authorized by the manufacturer.

Certain faults may occur during normal use of the appliance:

Malfunction	Possible causes:
The oven chamber heats ineffi-ciently or not at all.	• The cooking temperature regulator has intervened. • Damaged resistances; • Resistance contacter coil damaged; • Thermostat sensor damaged (error “EPt1“); • Damaged controller.
The oven temperature regulation is impossible.	• Operational thermostat faulty;
The oven switches off.	• The motor overheating fuse has tripped; • The control circuit component has tripped;
GAS MODELS only: **The pilot burner does not ignite.**	• Electrode poorly fixed or incorrectly connected; • Electric ignition or electrode cable damaged; • Insufficient gas pressure; • Pilot injector clogged; • Gas valve faulty.
GAS MODELS only: **The pilot burner goes out when the ignition button is released.**	• Thermocouple faulty or not sufficiently heated by pilot burner; • Gas pressure low at valve; • Gas valve faulty; • Safety thermostat(s) tripped;
GAS MODELS only: **The burner does not ignite when the pilot burner is lit.**	• Low pressure in gas pipes; • Injector clogged; • Gas valve faulty; • Gas outlet holes on burner clogged; • Motor thermal cut-out tripped; • Timer faulty; • Door micro-switch faulty or door not closed properly; • Operating thermostat or bulb damaged.
The oven temperature control does not work	• Operating thermostat faulty; • Gas valve faulty.

H.1.1 Servicing

Access to components requiring routine maintenance may be easily gained by opening the control panel or removing the LEFT side panel and rear panel.

LAYOUT OF MAIN COMPONENTS

IMPORTANT
All work inside the appliance must only be carried out by a trained installer authorised by the manufacturer.

Opening the control panel gives access to:

- all the electrical components;
- the power terminal block (accessible all from outside from the base of the appliance);
- the fuse.

To access the water solenoid valve:

- remove the control panel;
- remove the left side panel of the appliance.

To access the electric motor:

- remove the aspiration panel;
- remove the fan;
- remove the rear panel.

GAS models

Open the control panel and left side panel on the appliance to gain access to the following components:

- Water solenoid valve.
  To replace the gas solenoid valve, disconnect the pilot line and thermocouple and disconnect the gas inlet and outlet connection.
- Safety and operating thermostats.
  To replace the bulb on the safety thermostat, proceed as follows:
  1. Remove the fixing screws on the cover at the rear of the appliance;
  2. Remove the fume exhaust pipe (if fitted);
  3. Raise the back left side of the cover;
  4. Replace the thermostat bulb, taking care to correctly position the new bulb in its seat.
- Pilot burner and main burner
  To remove, first undo the fixing screws;
- Pilot burner and main burner injectors
  Replacement and primary air adjustment.

CE

Electrolux Professional SPA
Viale Treviso 15
33170 Pordenone
www.electroluxprofessional.com