SPARE PARTS CATALOGUE
CATALOGO PARTI DI RICAMBIO
**VEGETABLE WASHER 8 - 30 / 10 - 40 Kg**
**LAVAVERDURE A VASCA FISSA 8-30 / 10-40 Kg**

| PNC | Model | Ref. | Page |
|---|---|---|---|
| 660 031 | LV 200 | a | 1 - 3 |
| 660 033 | LV 300 | b | 2 - 3 |


| Pag | Index | Indice | Note |
|---|---|---|---|
| 2 | Tank, water system | Vasca, impianto idraulico | |
| 3 | Tank, water system | Vasca, impianto idraulico | |
| 4 | Pump ,electrical | Pompa, componenti elettrici | |
| 5-6 | Spare parts list | Lista ricambi | |


**Brand / Marchio :** Z- E
**Factory code:** PCM

**Grassetto = variazioni**
**Bold Print = changes**

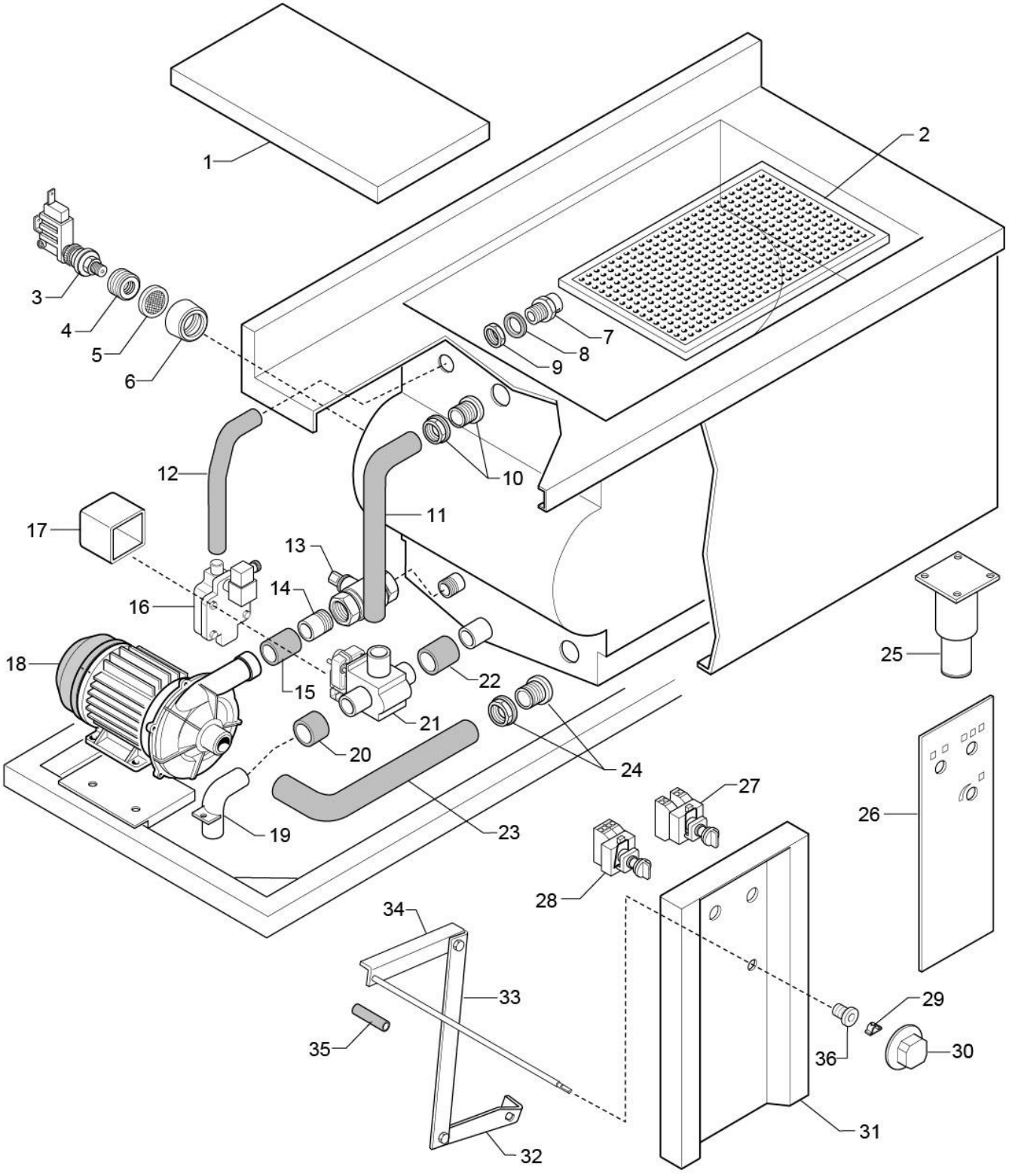


## LV 200

**VEGETABLE WASCHER 8 - 30 Kg - LAVAVERDURE A VASCA FISSA 8-30 Kg**

| From ser. nr. / Da Ser. Nr.: 922..... | Ed. 04<br>Updated. 03 2024 | Doc. Nr.: **1 - 61 004a** |
|---|---|---|

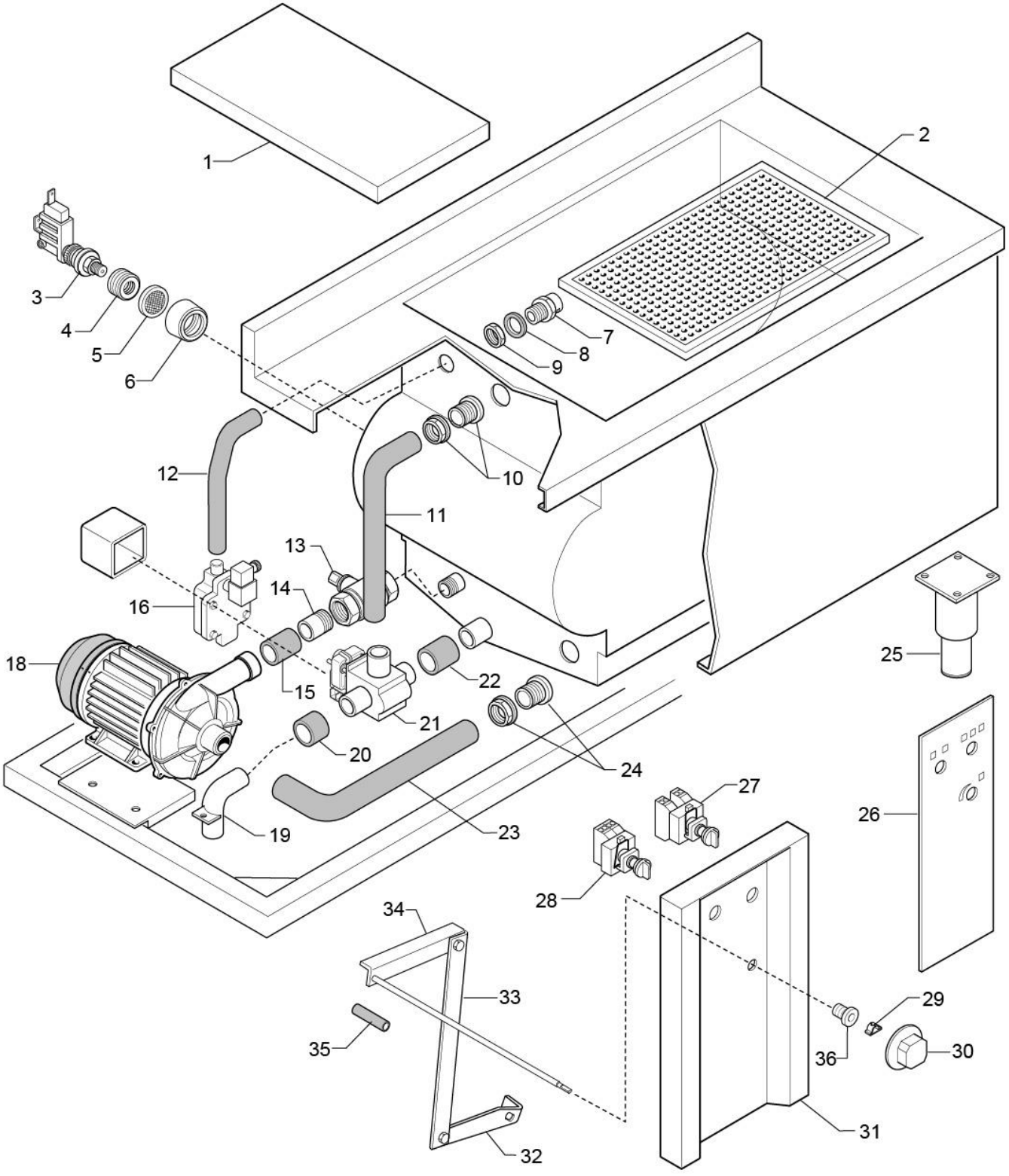


**LV 300**

**VEGETABLE WASCHER 8 - 40 Kg - LAVAVERDURE A VASCA FISSA 8-40 Kg**

| From ser. nr. / Da Ser. Nr.: 922..... | Ed. 04<br>Updated. 03 2024 | Doc. Nr.: **1 - 61 004a** |
|---|---|---|

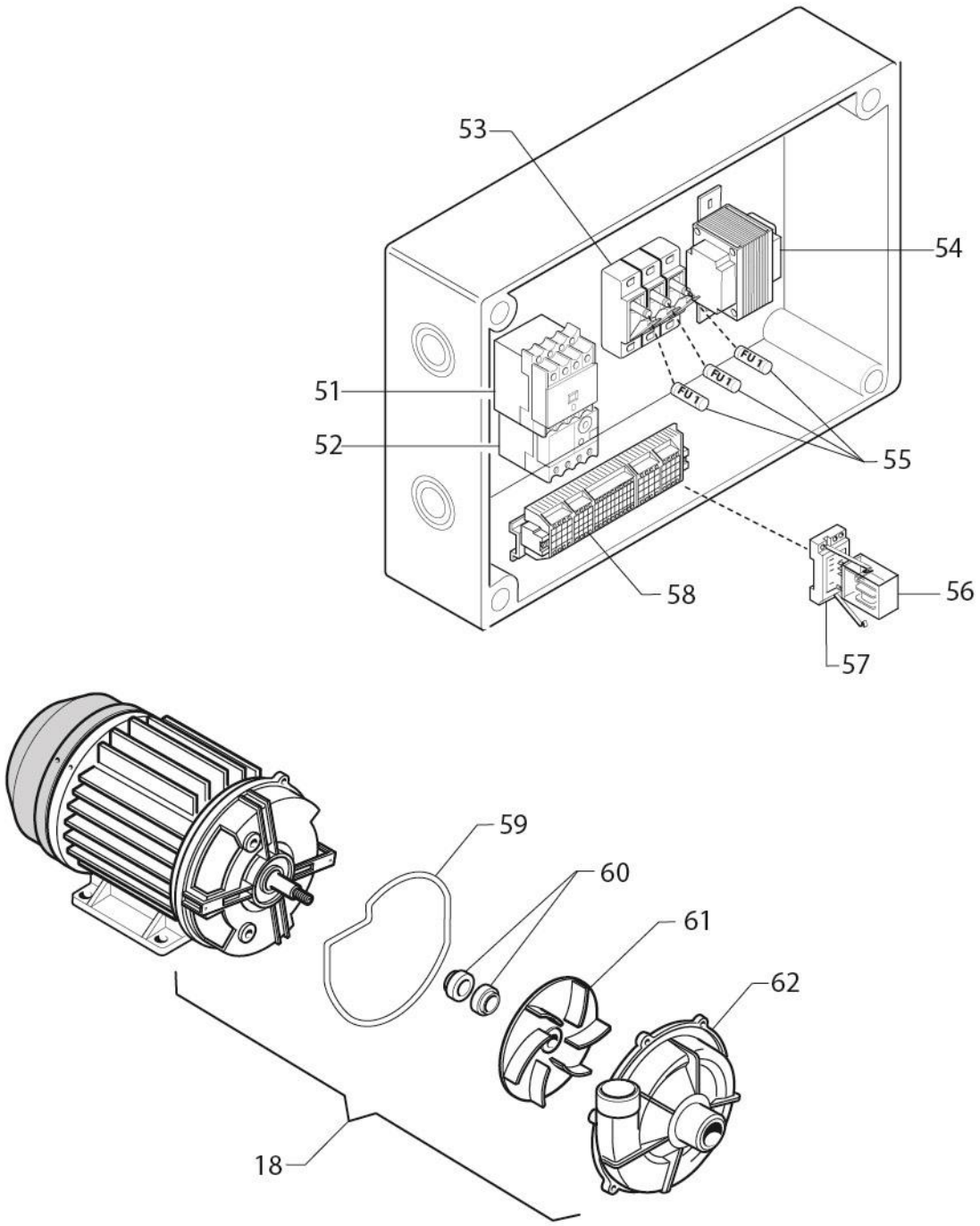


**LV 200 & 300**

**Vegetable wascher 8-30 / 10-40 Kg**
**Lavaverdure a vasca fissa 8-30 / 10-40 Kg**

| PNC | Model | Ref. |
|---|---|---|
| 660 031 | LV 200 | a |
| 660 033 | LV 300 | b |

| Pos | Code | Disegno | Descrizione | Description | Ref. / Notes |
|---|---|---|---|---|---|
| | | | **Pagina 1** | **Page 1** | |
| 1 | 005547 | 020502300 | Tagliere LV 200 | Cutting board LV 200 | a |
| 2 | 033482 | 050014500 | Filtro vasca LV 200 | Filter, tank LV 200 | a |
| 3 | 005530 | 021000500 | Pressostato | Pressure switch | |
| 4 | 005531 | 020520600 | Boccola riduzione x pressostato | Bushing, pressure switch | |
| 5 | 005533 | 037006000 | Filtro x pressostato | Filter, Pressure switch | |
| 6 | 005532 | 018001900 | Ghiera x pressostato | Ring nut, Pressure switch | |
| 7 | 006214 | 020527800 | Nipplo erogatore | Nipple, distributor | |
| 8 | 005536 | 020515100 | Guarnizione | Gasket | |
| 9 | 005534 | 020514900 | Dado x nipplo | Nut, nipple | |
| 10 | 005528 | 018001700 | Piletta di scarico 1 1/2 " | Floor drain 1 1/2 " | |
| **11** | **0C7111** | **020518900** | **Tubo gomma øi 45mm** | **Rubber pipe diam. 45 mm** | **a** |
| 12 | 005543 | 020519000 | Tubo gomma øi 32mm | Rubber pipe diam. 32 mm | a |
| 13 | 005538 | 022153100 | Valvola a sfera 1 1/4 " | Ball valve | a |
| 14 | | 001180600 | Manicotto x valvola | Sleeve, valve | a |
| 15 | 005541 | 020517900 | Tubo gomma øi 48mm | Rubber pipe diam. 48 mm | a |
| 16 | 003778 | 022130200 | Elettrovalvola 3/4" | Solenoid valve 3/4" | a 24 V 50 Hz |
| 18 | 005537 | 016000800 | Elettropompa | Electric pump | a art.1225/CHP1,5 |
| 19 | | | Raccordo di scarico | Pipe fitting, drain | |
| **20** | **037254** | | **Tubo gomma øi 60mm** | **Hose internal diameter 60mm** | |
| **21** | **0C4800** | **022152400** | **Valvola di scarico motorizzata** | **Drain valve, motorized** | With cover box |
| **22** | **037253** | | **Tubo gomma øi 55mm** | **Hose internal diameter 55mm** | |
| 23 | 0C7113 | 020518000 | Tubo gomma øi 60mm | Rubber pipe diam. 60 mm | |
| 24 | 005529 | 018001800 | Piletta di scarico 2 " | Floor drain 2 " | |
| 25 | 048579 | 050000900 | Piede | Foot | |
| **26** | | **054887CL00** | **Membrana cruscotto** | **Membrane, control panel** | **a** |
| 27 | 005078 | 005501700 | Selettore cicli | Selector, cycles | |
| 28 | 059051 | 005502000 | Interruttore on-off | On-off switch | |
| 29 | 025245 | 023160600 | Molletta x manopola | Spring, knob | ZGI 214590701 |
| 30 | 002672 | 020503800 | Manopola x valvola sfera | Knob, ball valve | ZGI 548837200 |
| 31 | 005540 | 030021101 | Cruscotto LV 200 | Control panel LV 200 | a |
| 32 | | 031063000 | Leva x valvola a sfera | Lever, ball valve | |
| 33 | | 031064000 | Leva di collegamento | Lever, connection | |
| 34 | | 031063600 | Leva x manopola | Lever, knob | |
| 35 | | 023150100 | Tubo distanziale | Pipe, spacer | |
| 36 | 033481 | 019305400 | Boccola x maniglia | Bushing, handle | |
| | | | **Pagina 2** | **Page 2** | |
| 1 | 005552 | 020502200 | Tagliere LV 300 | Cutting board LV 300 | b |
| 2 | 005551 | 031019300 | Filtro vasca LV 300 | Filter, tank LV 300 | b |
| 3 | 005530 | 021000500 | Pressostato | Pressure switch | |
| 4 | 005531 | 020520600 | Boccola riduzione x pressostato | Bushing, pressure switch | |
| 5 | 005533 | 037006000 | Filtro x pressostato | Filter, Pressure switch | |

**Vegetable wascher 8-30 / 10-40 Kg**
**Lavaverdure a vasca fissa 8-30 / 10-40 Kg**

| PNC | Model | Ref. |
|---|---|---|
| 660 031 | LV 200 | a |
| 660 033 | LV 300 | b |

| Pos | Code | Disegno | Descrizione | Description | Ref. / Notes |
|---|---|---|---|---|---|
| 6 | 005532 | 018001900 | Ghiera x pressostato | Ring nut, Pressure switch | |
| 7 | 006214 | 020527800 | Nipplo erogatore | Nipple, distributor | |
| 8 | 005536 | 020515100 | Guarnizione | Gasket | |
| 9 | 005534 | 020514900 | Dado x nipplo | Nut, nipple | |
| 10 | 005528 | 018001700 | Piletta di scarico 1 1/2 " | Floor drain 1 1/2 " | |
| 11 | | 020519200 | Tubo gomma øi 45mm | Rubber pipe diam. 45 mm | b |
| 12 | | 020519400 | Tubo gomma øi 32mm | Rubber pipe diam. 32 mm | b |
| 13 | 032721 | 022100400 | Valvola a sfera 1 1/4 " | Ball valve | b |
| **15** | **0CB778** | **020519300** | **Tubo gomma øi 48mm** | **Rubber pipe diam. 48 mm** | **b** |
| 16 | 033480 | 022150800 | Elettrovalvola 1" | Electrovalve 1" | b 24 V 50 Hz |
| 17 | 005539 | 020517800 | Carter x valvola scarico | Guard, drain valve | |
| 18 | 033484 | 016100100 | Elettropompa | Electric pump | b art.1225/AHP1,5 |
| 19 | | | Raccordo di scarico | Pipe fitting, drain | |
| 20 | 005545 | 020518700 | Tubo gomma øi 60mm | Rubber pipe diam. 60 mm | |
| 21 | 046432 | 022152400 | Valvola di scarico motorizzata | Drain valve, motorized | |
| 22 | 005546 | 020518800 | Tubo gomma øi 55mm | Rubber pipe diam. 55 mm | |
| 23 | 0C7113 | 020518000 | Tubo gomma øi 60mm | Rubber pipe diam. 60 mm | |
| 24 | 005529 | 018001800 | Piletta di scarico 2 " | Floor drain 2 " | |
| 25 | 048579 | 050000900 | Piede | Foot | |
| **26** | | **054887CM00** | **Membrana cruscotto** | **Membrane, control panel** | **b** |
| 27 | 005078 | 005501700 | Selettore cicli | Selector, cycles | |
| 28 | 059051 | 005502000 | Interruttore on-off | On-off switch | |
| 29 | 025245 | 023160600 | Molletta x manopola | Spring, knob | ZGI 214590701 |
| 30 | 002672 | 020503800 | Manopola x valvola sfera | Knob, ball valve | ZGI 548837200 |
| 31 | | 030050900 | Cruscotto LV 300 | Control panel LV 300 | b |
| 32 | | 031063000 | Leva x valvola a sfera | Lever, ball valve | |
| 33 | | 031064000 | Leva di collegamento | Lever, connection | |
| 34 | | 031063600 | Leva x manopola | Lever, knob | |
| 35 | | 023150100 | Tubo distanziale | Pipe, spacer | |
| 36 | 033481 | 019305400 | Boccola x maniglia | Bushing, handle | |
| | | | **Pagina 3** | **Page 3** | |
| 51 | 003885 | 005150800 | Contattore | Contactor | KMDILEM - 10 V24 |
| 52 | 004096 | 005181600 | Rele' termico | Thermal relay | ZE 4 |
| 53 | 003692 | 005103800 | Portafusibili 1P | Fuse holder 1P | PCH 1x38 |
| 54 | 003907 | 005160300 | Trasformatore | Transformer | |
| 55 | | | Fusibile | Fuse | |
| 56 | 054926 | 005501400 | Rele’ | Relay | MY2 24V AC |
| 57 | 059845 | 005503400 | Zoccolo x rele' | Loktalbase, relay | |
| 58 | | | Morsettiera | Terminal board | |
| 59 | | | Guarnizione x flangia | Gasket , flange | |
| 60 | | | Tenuta x albero motore | Shaft sealing, motor | |
| 61 | | | Girante pompa | Pump wheel | |
| 62 | | | Chiocciola x pompa | Pump shell | |