DE GASHERDE 7KW (6,5KW) & 10KW (8,5KW) / AUF OFEN
EN OPEN BURNER 7KW (6,5KW) & 10KW (8,5KW) / ON OVEN

TL80/85 Models 7kW / Towngas 6,5kW

PNC	Factory Model	Ref.	Description
588036	MAGCAADOPO	a	GAS TOP, 2 BURNER, 1-SIDE, 400X800X250H
588037	MAGCABDOPO	a	GAS TOP, 2 BURNER, 1-SIDE, C-BOARD, 400X800X250H
588038	MAGCACDOPO	b	GAS TOP, 2 BURNER, 2-SIDES, 400X800X250H
588039	MAGGAAHOPO	c	GAS TOP, 4 BURNER, 1-SIDE, 800X800X250H
588040	MAGGABHOPO	c	GAS TOP, 4 BURNER, 1-SIDE, C-BOARD, 800X800X250H
588041	MAGGACHOPO	d	GAS TOP, 4 BURNER, 2-SIDES, 800X800X250H
588042	MAGKAAKOPO	e	GAS TOP, 6 BURNER, 1-SIDE, 1200X800X250H
588043	MAGKABKOPO	e	GAS TOP, 6 BURNER, 1-SIDE, C-BOARD, 1200X800X250H
588044	MAGKACKOPO	f	GAS TOP, 6 BURNER, 2-SIDES, 1200X800X250H
588047	MAGCAADOPI	g	GAS TOP, 2 BURNER, ECO FLAME, 1-SIDE, 400X800X250H
588048	MAGCABDOPI	g	GAS TOP, 2 BURNER, ECO FLAME, 1-SIDE, C-BOARD, 400X800X250H
588049	MAGCACDOPI	h	GAS TOP, 2 BURNER, ECO FLAME, 2-SIDES, 400X800X250H
588050	MAGGAAHOPI	i	GAS TOP, 4 BURNER, ECO FLAME, 1-SIDE, 800X800X250H
588051	MAGGABHOPI	i	GAS TOP, 4 BURNER, ECO FLAME, 1-SIDE, C-BOARD, 800X800X250H
588052	MAGGACHOPI	k	GAS TOP, 4 BURNER, ECO FLAME, 2-SIDES, 800X800X250H
588053	MAGKAAKOPI	m	GAS TOP, 6 BURNER, ECO FLAME, 1-SIDE, 1200X800X250H
588054	MAGKABKOPI	m	GAS TOP, 6 BURNER, ECO FLAME, 1-SIDE, C-BOARD, 1200X800X250H
588055	MAGKACKOPI	n	GAS TOP, 6 BURNER, ECO FLAME, 2-SIDES, 1200X800X250H
588523	MBGCBBDOPO	o	GAS TOP, 2 BURNER, 1-SIDE, C-BOARD, 400X850X250H
588524	MBGGBBHOPO	p	GAS TOP, 4 BURNER, 1-SIDE, C-BOARD, 800X850X250H
588525	MBGKBBKOPO	q	GAS TOP, 6 BURNER, 1-SIDE, C-BOARD, 1200X850X250H
588527	MBGCBBDOPI	r	GAS TOP, 2 BURNER, ECO FLAME, 1-SIDE, C-BOARD, 400X850X250H
588528	MBGGBBHOPI	s	GAS TOP, 4 BURNER, ECO FLAME, 1-SIDE, C-BOARD, 800X850X250H
588529	MBGKBBKOPI	t	GAS TOP, 6 BURNER, ECO FLAME, 1-SIDE, C-BOARD, 1200X850X250H
593103	MBGCBBDOVO	o	GAS TOP, 2 BURNER, TOWNGAS, 1-SIDE, C-BOARD, 400X850X250H
593104	MBGGBBHOVO	p	GAS TOP, 4 BURNER, TOWNGAS, 1-SIDE, C-BOARD, 800X850X250H
593105	MBGCBBDOVI	r	GAS TOP, 2 BURNER, TOWNGAS, ECO FLAME, 1-SIDE, C-BOARD, 400X850X250
593106	MBGGBBHOVI	s	GAS TOP, 4 BURNER, TOWNGAS, ECO FLAME, 1-SIDE, C-BOARD, 800X850X250

Single Burner Model 9kW

PNC	Factory Model	Ref.	Description
588479	MAGWAAEOPO		GAS TOP, 1 BURNER,1-SIDE, 500X800X250H

TL90 Models 10kW / Towngas 8,5kW

PNC	Factory Model	Ref.	Description
589068	MCGDAAEOPO	t	GAS TOP, 2 BURNER, 1-SIDE, 500X900X250H
589069	MCGDABEOPO	t	GAS TOP, 2 BURNER, 1-SIDE, C-BOARD, 500X900X250H
589070	MCGDACEOPO	u	GAS TOP, 2 BURNER, 2-SIDES, 500X900X250H
589071	MCGHAAJOPO	v	GAS TOP, 4 BURNER, 1-SIDE, 1000X900X250H
589072	MCGHABJOPO	v	GAS TOP, 4 BURNER, 1-SIDE, C-BOARD, 1000X900X250H
589073	MCGHACJOPO	w	GAS TOP, 4 BURNER, 2-SIDES, 1000X900X250H
589074	MCGLAALOPO	x	GAS TOP, 6 BURNER, 1-SIDE, 1500X900X250H
589075	MCGLABLOPO	x	GAS TOP, 6 BURNER, 1-SIDE, C-BOARD, 1500X900X250H
589076	MCGLACLOPO	y	GAS TOP, 6 BURNER, 2-SIDES, 1500X900X250H
589079	MCGDAAEOPI	z	GAS TOP, 2 BURNER, ECO FLAME, 1-SIDE, 500X900X250H
589080	MCGDABEOPI	z	GAS TOP, 2 BURNER, ECO FLAME, 1-SIDE, C-BOARD, 500X900X250H
589081	MCGDACEOPI	1	GAS TOP, 2 BURNER, ECO FLAME, 2-SIDES, 500X900X250H
589082	MCGHAAJOPI	2	GAS TOP, 4 BURNER, ECO FLAME, 1-SIDE, 1000X900X250H
589083	MCGHABJOPI	2	GAS TOP, 4 BURNER, ECO FLAME, 1-SIDE, C-BOARD, 1000X900X250H
589084	MCGHACJOPI	3	GAS TOP, 4 BURNER, ECO FLAME, 2-SIDES, 1000X900X250H
589085	MCGLAALOPI	4	GAS TOP, 6 BURNER, ECO FLAME, 1-SIDE, 1500X900X250H
589086	MCGLABLOPI	4	GAS TOP, 6 BURNER, ECO FLAME, 1-SIDE, C-BOARD, 1500X900X250H
589087	MCGLACLOPI	5	GAS TOP, 6 BURNER, ECO FLAME, 2-SIDES, 1500X900X250H
593306	MCGDAAEOVO	t	GAS TOP, 2 BURNER, TOWNGAS, 1-SIDE, 500X900X250H
593307	MCGDABEOVO	t	GAS TOP, 2 BURNER, TOWNGAS, 1-SIDE, C-BOARD, 500X900X250H
593308	MCGDACEOVO	u	GAS TOP, 2 BURNER, TOWNGAS, 2-SIDES, 500X900X250H
593309	MCGHAAJOVO	v	GAS TOP, 4 BURNER, TOWNGAS, 1-SIDE, 1000X900X250H
593310	MCGHABJOVO	v	GAS TOP, 4 BURNER, TOWNGAS, 1-SIDE, C-BOARD, 1000X900X250H
593311	MCGHACJOVO	w	GAS TOP, 4 BURNER, TOWNGAS, 2-SIDES, 1000X900X250H
593312	MCGDAAEOVI	z	GAS TOP, 2 BURNER, TOWNGAS, ECO FLAME, 1-SIDE, 500X900X250
593313	MCGDABEOVI	z	GAS TOP, 2 BURNER, TOWNGAS, ECO FLAME, 1-SIDE, C-BOARD, 500X900X250
593314	MCGDACEOVI	1	GAS TOP, 2 BURNER, TOWNGAS, ECO FLAME, 2-SIDES, 500X900X250
593315	MCGHAAJOVI	2	GAS TOP, 4 BURNER, TOWNGAS, ECO FLAME, 1-SIDE, 1000X900X250
593316	MCGHABJOVI	2	GAS TOP, 4 BURNER, TOWNGAS, ECO FLAME, 1-SIDE, C-BOARD, 1000X900X25
593317	MCGHACJOVI	3	GAS TOP, 4 BURNER, TOWNGAS, ECO FLAME, 2-SIDES, 1000X900X250

✱ Components on demand
✱ Teile auf Anfrage

TL85/90 Models Open Burner on Static Oven 35kW / 47kW / Towngas 41kW

PNC	Factory Model	Ref.	Description
588691	MBQIGBHCPO	**6**	GAS TOP, 4 BURNER ,STATIC OVEN, 1-SIDE, C-BOARD, 800X850X700H
589615	MCQJECJCPO	**7**	GAS TOP, 4 BURNER, STATIC OVEN, 2-SIDES, 1000X900X700H
589617	MCQJFCJCPO	**8**	GAS TOP, 4 BURNER, STATIC OVEN, 2-SIDES, 1000X900X800H
589641	MCQIEAJCPO	**9**	GAS TOP, 4 BURNER, STATIC OVEN, 1-SIDE, 1000X900X700H
589642	MCQIEBJCPO	**9**	GAS TOP, 4 BURNER, STATIC OVEN, 1-SIDE, C-BOARD, 1000X900X700H
589645	MCQIFAJCPO	**10**	GAS TOP, 4 BURNER, STATIC OVEN, 1-SIDE, 1000X900X800H
589646	MCQIFBJCPO	**10**	GAS TOP, 4 BURNER, STATIC OVEN, 1-SIDE, C-BOARD, 1000X900X800H
588692	MBQMGBHCPO	**11**	GAS TOP, 4 BURNER, ECO FLAME, STATIC OVEN, 1-SIDE, C-BOARD, 800X850X700H
589616	MCQNECJCPO	**12**	GAS TOP, 4 BURNER, ECO FLAME, STATIC OVEN, 2-SIDE, 1000X900X700H
589618	MCQNFCJCPO	**13**	GAS TOP, 4 BURNER, ECO FLAME, STATIC OVEN, 2-SIDE, 1000X900X800H
589643	MCQMEAJCPO	**14**	GAS TOP, 4 BURNER, ECO FLAME, STATIC OVEN, 1-SIDE, 1000X900X700H
589644	MCQMEBJCPO	**14**	GAS TOP, 4 BURNER, ECO FLAME, STATIC OVEN, 1-SIDE, C-BOARD, 1000X900X700H
589647	MCQMFAJCPO	**15**	GAS TOP, 4 BURNER, ECO FLAME, STATIC OVEN, 1-SIDE, 1000X900X800H
589648	MCQMFBJCPO	**15**	GAS TOP, 4 BURNER, ECO FLAME, STATIC OVEN, 1-SIDE, C-BOARD, 1000X900X800H
593120	MBQIGBHCVO	**6**	GAS TOP, 4 BURNER, TOWNGAS, STATIC OVEN, 1-SIDE, C-BOARD, 800X850X700H
593346	MCQJECJCVO	**7**	GAS TOP, 4 BURNER, TOWNGAS, STATIC OVEN, 2-SIDES, 1000X900X700H
593348	MCQIEAJCVO	**9**	GAS TOP, 4 BURNER, TOWNGAS, STATIC OVEN, 1-SIDE, 1000X900X700H
593349	MCQIEBJCVO	**9**	GAS TOP, 4 BURNER, TOWNGAS, STATIC OVEN, 1-SIDE, C-BOARD, 1000X900X700H
593121	MBQMGBHCVO	**11**	GAS TOP, 4 BURNER, TOWNGAS, ECO FLAME, STATIC OVEN, 1-SIDE, C-BOARD, 800X850X700H
593347	MCQNECJCVO	**12**	GAS TOP, 4 BURNER, TOWNGAS, ECO FLAME, STATIC OVEN, 2-SIDES, 1000X900X700H
593350	MCQMEAJCVO	**14**	GAS TOP, 4 BURNER, TOWNGAS, ECO FLAME, STATIC OVEN, 1-SIDE, 1000X900X700H
593351	MCQMEBJCVO	**14**	GAS TOP, 4 BURNER, TOWNGAS, ECO FLAME, STATIC OVEN, 1-SIDE, C-BOARD, 1000X900X700H

Page	Index
4	Control panel & pan support
6	Mechanical module
8	Gas line
10	Eco flame
12	Old grease drawer
14	New grease drawer
16	Oven
18	Base Oven
20	Single burner
22	Nozzle list

Last Updates	Page	Pos.
12/2015	all	
05/2016	added Gasoven	
04/2017	16	
09/2017	14, 15	From 25 to 35
09/2017	18, 19, 24, 27	
11/2017	6 / 7	exploded view / 20, 21, 22, 23
02/2018	7 / 17	4 / 22, 29
02/2018	14, 15	new grase drawer
09/2018	4	
10/2018	17	added mertik led
11/2018	19	17, 18, 19, 20, 21
12/2018	5 / 17	5 / 31
01/2019	20, 21, 26	added Single burner

Valid from Ser. № 3101....

1	Bedienblende & Pfannenträger	Control panel & Pan supports

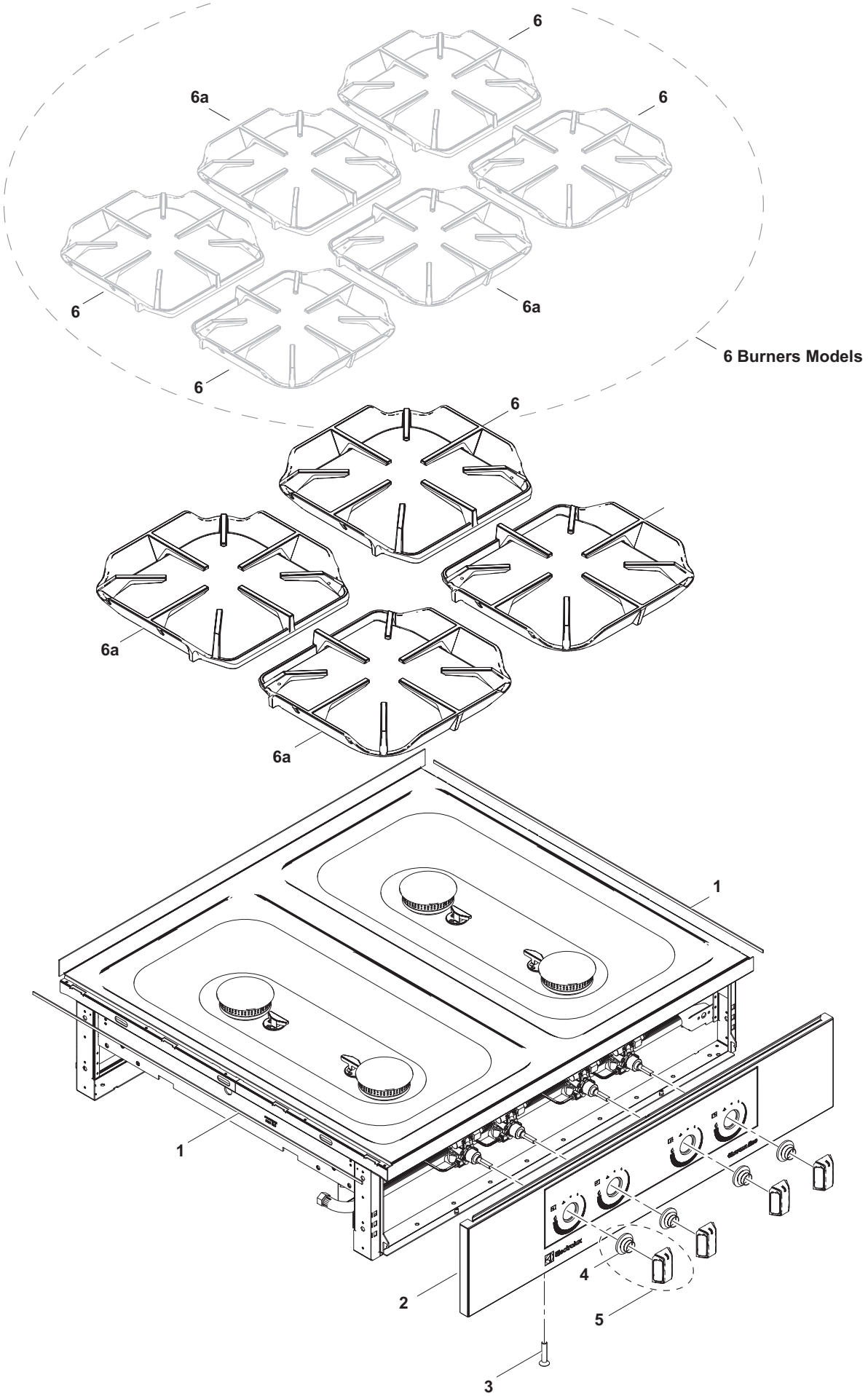

Page: 4	Doc. № 599A2AH00 / 82.8041.03	✱ Components on demand ✱ Teile auf Anfrage

1	Alias	Code	Bezeichnung	Description	Ref.	Valid from Serial N°
1	82.7464	0C2496	Dichtband (Schaumstoff-Silikon, klebend)	Sealing strip	all Types	
2	82.1049.32	✱	Blende 400 2Z INOX mit Schublade	Control panel 400 2Z INOX with drawer	r	
	82.1049.33	✱	Blende 400 2Z INOX	Control panel 400 2Z INOX	o	
	82.1049.38	✱	Blende 800 4Z INOX mit Schublade	Control panel 800 4Z INOX with drawer	s	
	82.1049.59	✱	Blende 800 4Z INOX	Control panel 800 4Z INOX	p	
	82.1049.54	✱	Blende 1200 6Z INOX mit Schublade	Control panel 1200 6Z INOX with drawer	t	
	82.1049.52	✱	Blende 1200 6Z INOX	Control panel 1200 6Z INOX	q	
	82.1027.31	✱	Blende 400 2Z	Control panel 400 2Z	a	
	82.1027.93	✱	Blende 400 2Z mit Schublade	Control panel 400 2Z with drawer	g	
	82.1027.36	✱	Blende 400 1Z	Control panel 400 1Z	b	
	82.1027.34	✱	Blende 400 1Z mit Schublade	Control panel 400 1Z with drawer	h	
	82.1027.89	✱	Blende 500 2Z	Control panel 500 2Z	t	
	82.1027.95	✱	Blende 500 2Z mit Schublade	Control panel 500 2Z with drawer	z	
	82.1027.92	✱	Blende 500 1Z	Control panel 500 1Z	u	
	82.1027.98	✱	Blende 500 1Z mit Schublade	Control panel 500 1Z with drawer	1	
	82.1027.32	✱	Blende 800 4Z	Control panel 800 4Z	c	
	82.1027.96	✱	Blende 800 4Z mit Schublade	Control panel 800 4Z with drawer	i	
	82.1027.37	✱	Blende 800 2Z	Control panel 800 2Z	d	
	82.1027.35	✱	Blende 800 2Z mit Schublade	Control panel 800 2Z with drawer	k	
	82.1027.90	✱	Blende 1000 4Z	Control panel 1000 4Z	v	
	82.1027.40	✱	Blende 1000 4Z mit Schublade	Control panel 1000 4Z with drawer	2	
	82.1027.33	✱	Blende 1000 2Z	Control panel 1000 2Z	w	
	82.1027.99	✱	Blende 1000 2Z mit Schublade	Control panel 1000 2Z with drawer	3	
	82.1027.42	✱	Blende 1200 6Z	Control panel 1200 6Z	e	
	82.1027.41	✱	Blende 1200 6Z mit Schublade	Control panel 1200 6Z with drawer	m	
	82.1027.39	✱	Blende 1200 3Z	Control panel 1200 3Z	f	
	82.1027.38	✱	Blende 1200 3Z mit Schublade	Control panel 1200 3Z with drawer	n	
	82.1027.91	✱	Blende 1500 6Z	Control panel 1500 6Z	x	
	82.1027.97	✱	Blende 1500 6Z mit Schublade	Control panel 1500 6Z with drawer	4	
	82.1027.94	✱	Blende 1500 3Z	Control panel 1500 3Z	y	
	82.1027.100	✱	Blende 1500 3Z mit Schublade	Control panel 1500 3Z with drawer	5	
	82.1000.01	✱	Blende Rückseite 400	Back panel 400	b h	
	82.1000.02	✱	Blende Rückseite 500	Back panel 500	u 1	
	82.1000.05	✱	Blende Rückseite 800	Back panel 800	d k	
	82.1000.07	0G7445	Blende Rückseite 1000	Back panel 1000	w 3	
	82.1000.08	✱	Blende Rückseite 1200	Back panel 1200	f n	
	82.1000.09	✱	Blende Rückseite 1500	Back panel 1500	y 5	
3	1 701 1072	0G6833	Senkschraube M5x25	Bolt M5x25	all Types	
4	82.7009	0G6247	Dichtung Drehgriff	Sealing for hande	all Types	
5	82.6637.05	0G7697	Drehgriff Kpl.	Handle complete kit	all Types	
6	82.7217	0G6679	Pfannenträger 500mm 10kW	Pan support 500mm 10kW	Standard 10KW	
	82.7460.01	0G7763	Pfannenträger 500mm 10kW ECO	Pan support 500mm 10kW ECO	Eco flame 10kW	
	82.7258	0G6725	Pfannenträger 400mm 5-7kW	Pan support 400mm 5-7kW	Standard 7KW	
	82.7360.01	0G8269	Pfannenträger 400mm 5-7kW ECO	Pan support 400mm 5-7kW ECO	Eco flame 7kW	
	82.7270	0G8085	Pfannenträger 400mm 10kW	Pan support 400mm 10kW	Special 10kW	
6a	82.7460.02	0G7764	Pfannenträger 500mm 10kW ECO	Pan support 500mm 10kW ECO	Eco flame 10kW	
	82.7360.02	0G8268	Pfannenträger 400mm 5-7kW ECO	Pan support 400mm 5-7kW ECO	Eco flame 7kW	

✱ Components on demand
✱ Teile auf Anfrage

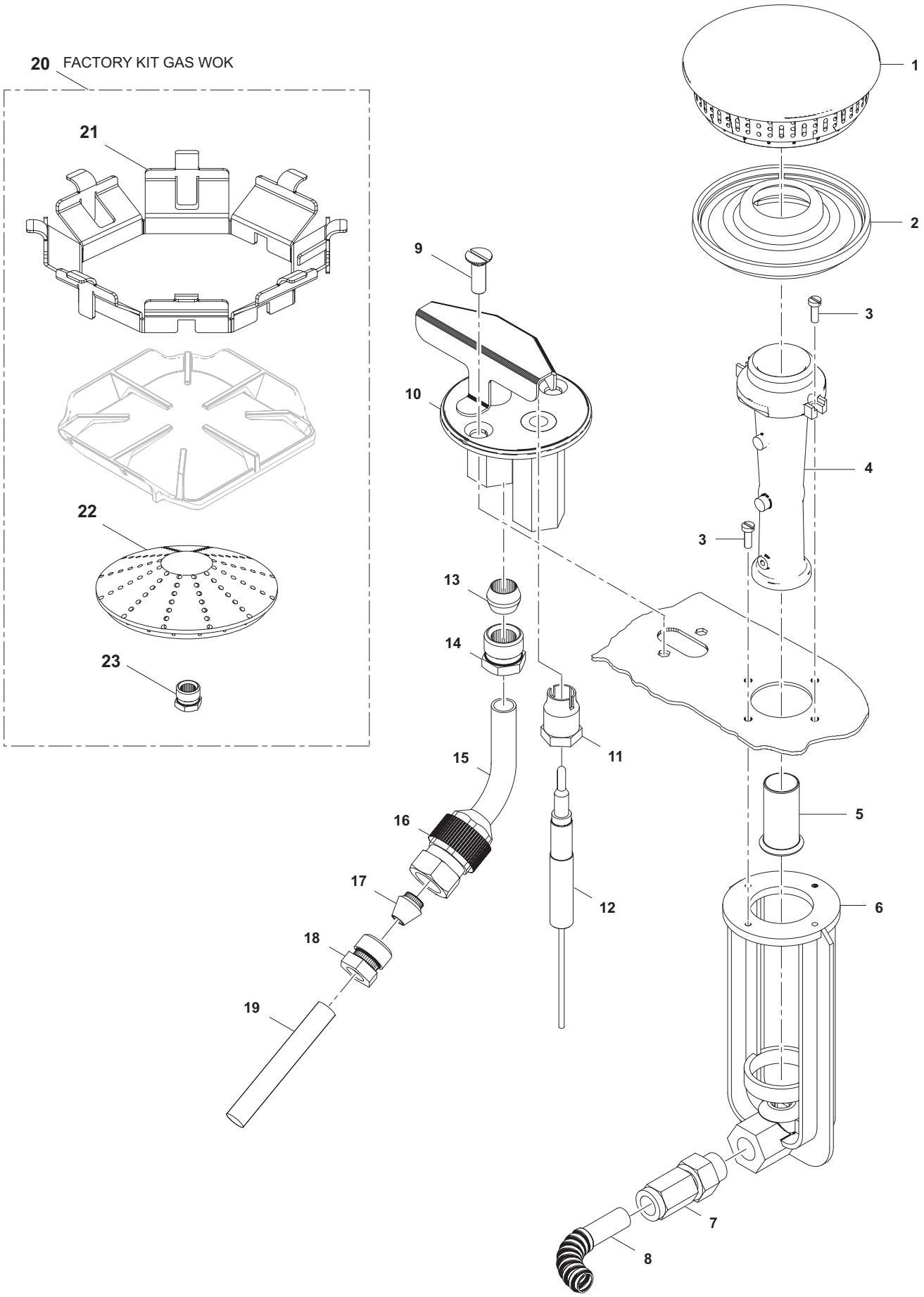

Doc. № 599A2AH00 / 82.8041.03

✱ Components on demand
✱ Teile auf Anfrage

2	Alias	Code	Bezeichnung	Description	Ref.	Valid from Serial N°
1	82.7451		Brennerdeckel 5kW	Flame spreader top 5kW	all 5kW	
	82.7260	0G6350	Brennerdeckel 7kW	Flame spreader top 7kW	all 7kW	
	82.7222	0G6352	Brennerdeckel 10kW	Flame spreader top 10kW	all 10kW	
2	1 701 2782	0C0127	Brennerkörper 5 - 7kW	Flame spreader bottom 5 - 7kW	5kW/7kW	
	1 701 2781	0C0126	Brennerkörper 10kW	Flame spreader bottom 10kW	10kW	
3	1 701 2023	0G6863	Zylinderkopfschraube M4x12	Cylinder head screw M4x12	all types	
4	82.7391	0G6351	Brennerrohr 5 - 7kW	Burner tube 5 - 7kW	5kW/7kW	
	82.7302	0G6353	Brennerrohr 10kW	Burner tube 10kW	10kW	
	83.9216	0G8294	Brennerrohr 10kW UL	Burner tube 10kW UL	10kW for USA	
5	82.7282	052062	Regulierhülse	Aeration tube	5kW/7kW	
	82.7303	058302	Regulierhülse	Aeration tube	10kW	
6	1 701 2784	0C0124	Halter Brennerrohr	Burner tube support	all types	
7	1 101 3819	0G4253	Verschraubung	Screw fitting	all types	
8	82.7374.01	0G7530	Gasleitung flexibel D12 kurz	Gas pipe flexible D12 kurz	all types	
	82.7374.02	0G7531	Gasleitung flexibel D12 lang	Gas pipe flexible D12 long	all 1-side	
9	1 701 1028	0G3034	Senkkopfschraube M4x12	Countersunk Screw M4x12	all types	
10	1 701 2791	0C3644	Zündbrenner	Pilot burner	Standard	
	82.7279	0G6726	Zündbrenner LPG	Pilot burner LPG	LPG	
11	1 106 1236	0C0121	Thermoelementschraube	Thermocouple fitting	all types	
12	82.7325	0G6354	Thermoelement M9x1	Thermocouple M9x1	all types	
13	1 701 2793	0C3645	Doppelkegelring 7mm	Pipe connection 7mm	all types	
14	1 701 2794	0C3646	Überwurfmutter M11x1	Sleeve nut M11x1	all types	
15	82.7277	0G6457	Zündbrenneranschluss	Pilot burner connection	all types	
16	82.7283	0G7793	Gewindering	Threaded ring	all types	
17	1 701 2757	0G2960	Klemmring D4	Clamping Ring D4	all types	
18	1 701 2759	0G2958	Anschraubnippel M10	Nipple M10	all types	
19	82.7296.02		Gasleitung Zündbrenner kurz	Gas pipe pilot burner short	all types	
	82.7296.03		Gasleitung Zündbrenner lang	Gas pipe pilot burner long	all 1-side	
20	913656	0G8076	Factory Kit Gas Wok	Factory Kit Gas Wok	12kW	7431...
21	82.4672_0	0G7989	Support Kpl. Gas Wok	Support Cpl. Gas Wok	12kW	7431...
22	82.4673_A	0G7988	Brennerdeckel für Wok	Flame spreader for Wok	12kW	7431...
23	72.7801.39_5	0A2570	Düse für Fg-Herde / 90 STAMP.260	Injector Town Gas	12kW	7431...

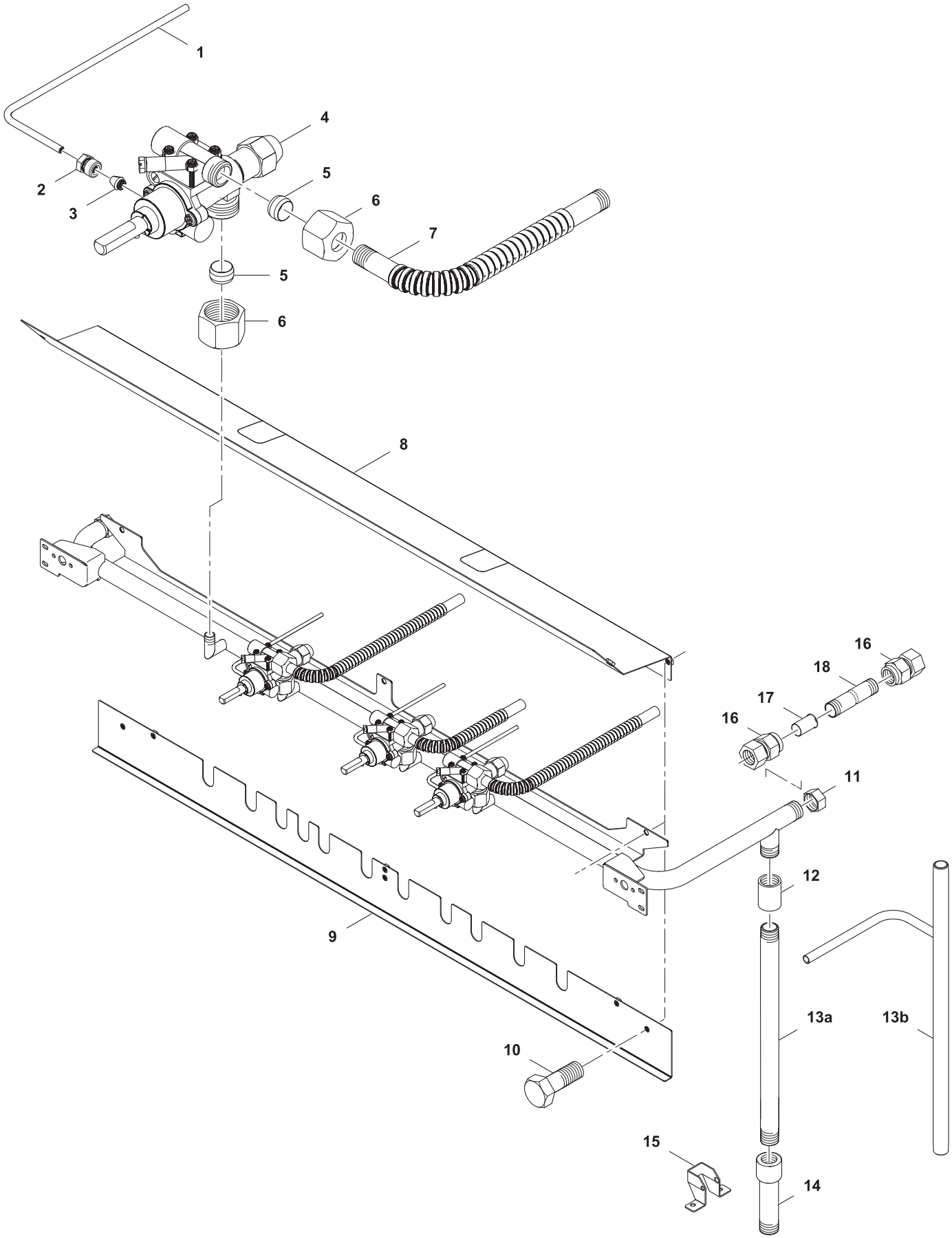

Doc. № 599A2AH00 / 82.8041.03

✱ Components on demand
✱ Teile auf Anfrage

3	Alias	Code	Bezeichnung	Description	Ref.	Valid from Serial N°
1	82.7296.02		Gasleitung Zündbrenner kurz	Gas pipe pilot burner short	all types	
	82.7296.03		Gasleitung Zündbrenner lang	Gas pipe pilot burner long	all 1-side	
2	1 701 2759	0G2958	Anschraubnippel M10	Nipple M10	all types	
3	1 701 2757	0G2960	Klemmring D4	Fixation D4	all types	
4	82.7223	0G6462	Gashahn Pintossi 22S	Gas valve Pintossi 22S	all types	
5	712 345053.01	0G3333	Doppelkegelring	Pipe connection	all types	
6	712 345052.03	0KX142	Überwurfmutter	Sleeve nut	all types	
7	82.7374.01	0G7530	Gasleitung flexibel D12 kurz	Gas pipe flexible D12 short	all types	
	82.7374.02	0G7531	Gasleitung flexibel D12 lang	Gas pipe flexible D12 long	all 1-side	
8	82.4585.01		Schutzblech oben 400	Protection sheet top 400	all W=400	
	82.4585.02		Schutzblech oben 500	Protection sheet top 500	all W=500	
	82.4585.03		Schutzblech oben 800	Protection sheet top 800	all W=800	
	82.4585.04		Schutzblech oben 1000	Protection sheet top 1000	all W=1000	
	82.4585.05		Schutzblech oben 1200	Protection sheet top 1200	all W=1200	
	82.4585.06		Schutzblech oben 1500	Protection sheet top 1500	all W=1500	
9	82.4648.01		Schutzblech unten 400	Protection sheet bottom 400	all W=400	
	82.4648.02		Schutzblech unten 500	Protection sheet bottom 500	all W=500	
	82.4648.03		Schutzblech unten 800	Protection sheet bottom 800	all W=800	
	82.4648.04		Schutzblech unten 1000	Protection sheet bottom 1000	all W=1000	
	82.4648.05		Schutzblech unten 1200	Protection sheet bottom 1200	all W=1200	
	82.4648.06		Schutzblech unten 1500	Protection sheet bottom 1500	all W=1500	
10	1 701 2579	0G4020	Sechskantschraube M5x16	Hex bolt M5x16	all types	
11	712 344853.09	0KX151	Gewindekappe G1/2"	Cap G1/2"	all types	
12	712 344852.24	0G6841	Gewindemuffe G1/2" x 34	Threaded socket G1/2" x 34	all types	
13a	82.7154		Doppelnippel L500 1/2"	Double nipple L500 1/2"	all types	
13b	82.4624		Gasrampe Gasherd & Ofen 800	Gasline Open Burner & Oven 800	6, 11	
	82.1164		Gasrampe Gasherd & Ofen 1000	Gasline Open Burner & Oven 1000	7, 8, 9, 10, 12, 13, 14, 15,	
14	1 102 2397	0G3621	Rohrverlängerung G1/2"	Pipe extension G1/2"	all types	
15	82.4676.01		Halteblech Gasrohr	Gas pipe support	all types	
16	1 101 2164	0G5565	Verschraubung	Conncetion	all 2-sides	
17	1 101 3709	0G5566	Hülse	Pipe inlet	all 2-sides	
18	82.0688.01		Rohr CU 220/L	Pipe CU 220/L	800 2-sides	
	82.0688.03		Rohr CU 220/L	Pipe CU 220/L	900 2-sides	

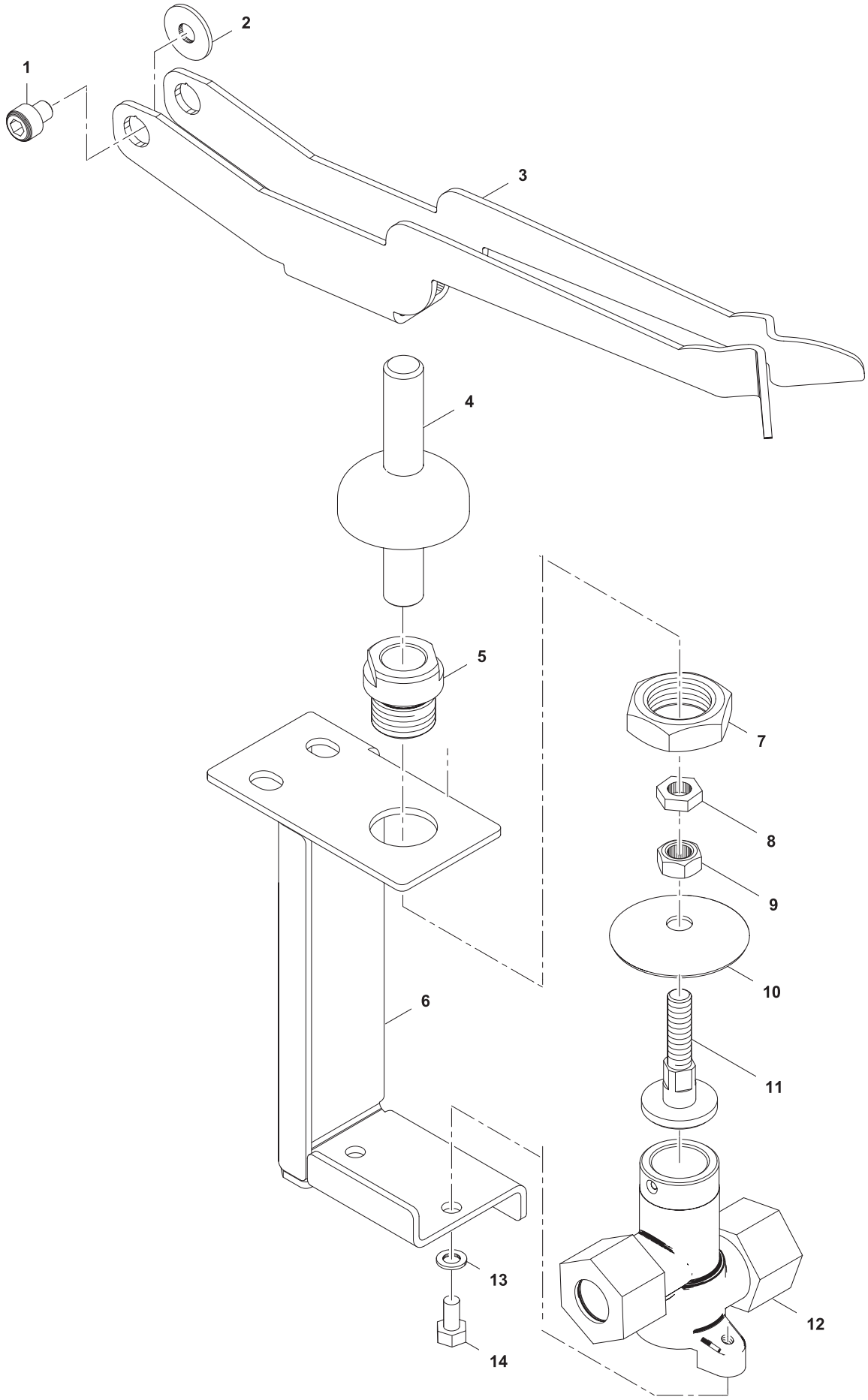

Doc. № 599A2AH00 / 82.8041.03

✱ Components on demand
✱ Teile auf Anfrage

4	Alias	Code	Bezeichnung	Description	Ref.	Valid from Serial N°
1	1 101 8199	0G7257	Schraube Zyl. I-6kt M5x6	Allen screw M5x6	Eco flame	
2	12.1980	0G4391	U-Scheibe Ø5,3 x Ø15 x 1,2	Washer Ø5,3 x Ø15 x 1,2	Eco flame	
3	82.4554.01	0G7723	Hebel Eco Flam 10kW	Eco flam lever 10kW	Eco flame 10kW	
	82.4554.02		Hebel Eco Flam 7kW	Eco flam lever 7kW	Eco flame 7kW	
4	62.6235	0G5175	Welle	Shaft	Eco flame	
5	72.5069	0G3448	Durchführung	Connection	Eco flame	
6	62.6078	✱	Halterung	Support	Eco flame	
7	1 701 3054	0G3447	Mutter 6kt M16 x 0.5D	Nut 6kt M16 x 0.5D	Eco flame	
8	1 701 3014	0G5618	Mutter 6kt M6 x 0.5D	Nut 6kt M6 x 0.5D	Eco flame	
9	1 701 3016	0G5739	Mutter 6kt M6 x 0.8D	Nut 6kt M6 x 0.8D	Eco flame	
10	62.6236	0G5173	Abdeckkappe	Cap	Eco flame	
11	62.6234	0G6822	Zapfen	Spigot	Eco flame	
12	72.2005.01	0KI385	Top Flam	Top Flam	Eco flame	
13	1 701 5002	0KL273	Federring M4	Spring washer M4	Eco flame	
14	1 701 2503	0G5490	Schraube 6kt M4 x 8	Screw 6kt M4 x 8	Eco flame	

✱ Components on demand
✱ Teile auf Anfrage

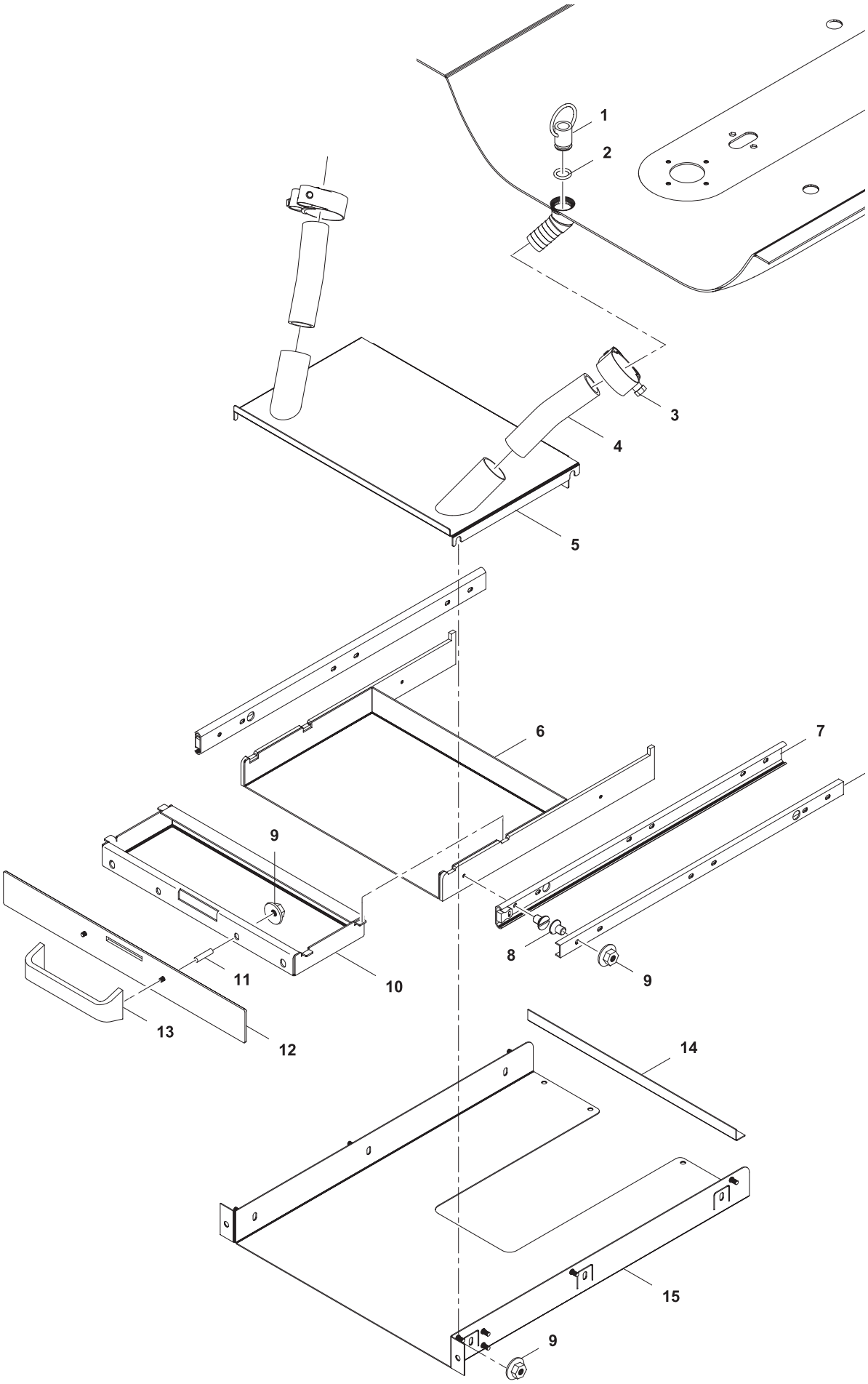

Doc. № 599A2AH00 / 82.8041.03

✱ Components on demand
✱ Teile auf Anfrage

5	Alias	Code	Bezeichnung	Description	Ref.	Valid from Serial N°
			Valid until 7391...			
1	82.7231	0G7103	Wasserauslauf	Wateroutlet	all Eco flame	
2	82.7238	0C2183	O-Ring	O-ring	all Eco flame	
3	1 701 2814	0L2728	Schlauchklemme 25-40mm	Hose clamp 25-40mm	all Eco flame	
4	1 115 1417	0K5830	Schlauch	Hose	all Eco flame	
5	82.4280.03		Schubladenoberteil	Drawer top	g h m n r t z 1 4 5	
	82.4280.11		Schubladenoberteil	Drawer top	i k s 2 3	
6	82.4284.01		Schubladenkasten	Drawer box	all Eco flame	
7	82.7201	0G6687	Führung	Rail	all Eco flame	
8	1 701 1145	0G6758	Senkschraube M4x6	Countersunk Screw M4x6	all Eco flame	
9	712 044120.04	0G4918	Kepsmutter M4	Keps nut M4	all Eco flame	
10	82.4281.01		Schubladeneinsatz	Drawer	all Eco flame	
11	1 701 5532	0G7217	Gewindestift M4x12	Bolt M4x12	all Eco flame	
12	82.2279	0G7032	Frontblech Schublade	Front panel drawer	all Eco flame	
	82.2941		Frontblech Schublade	Front panel drawer	all Eco flame	7011...
13	82.2209	0G7033	Griff	Handle	all Eco flame	
14	82.4373	0G7035	Verstärkung	Support	all Eco flame	
	82.2944		Verstärkung	Support	all Eco flame	7011...
15	82.4279	0G7034	Schubladenunterteil	Drawer bottom	all Eco flame	
	82.2942		Schubladenunterteil	Drawer bottom	all Eco flame	7011...

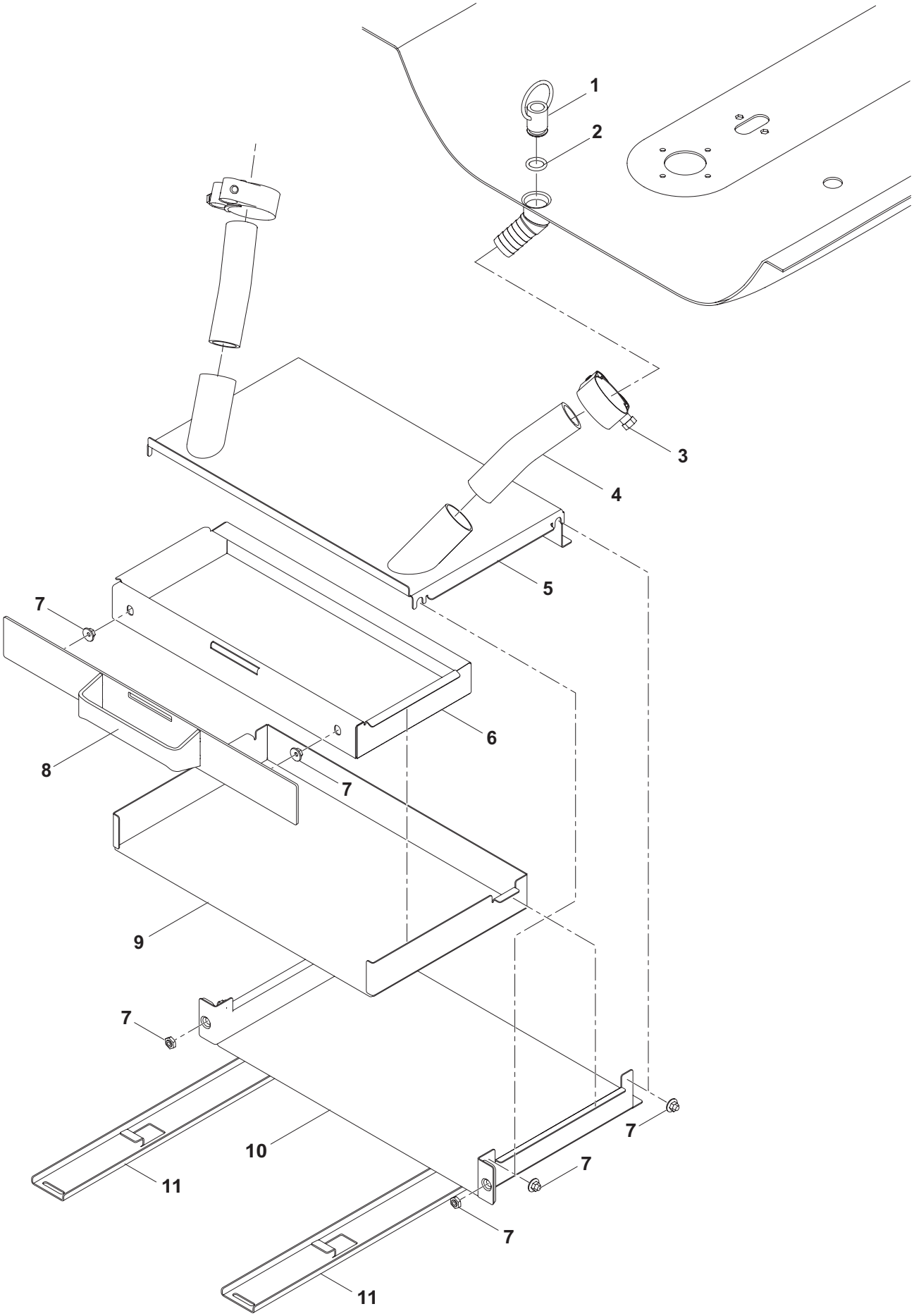

Doc. № 599A2AH00 / 82.8041.03

✱ Components on demand
✱ Teile auf Anfrage

5	Alias	Code	Bezeichnung	Description	Ref.	Valid from Serial N°
			Valid from 7401...			
1	82.7231	0G7103	Wasserauslauf	Wateroutlet	all Eco flame	
2	82.7238	0C2183	O-Ring	O-ring	all Eco flame	
3	1 701 2814	0L2728	Schlauchklemme 25-40mm	Hose clamp 25-40mm	all Eco flame	
4	1 115 1417	0K5830	Schlauch	Hose	all Eco flame	
5	82.2977.03	0G8240	Schubladenoberteil	Drawer top	2 zones	
	82.2977.11	0G8298	Schubladenoberteil	Drawer top	4 zones	
6	82.2987	0G8254	Schubladenkasten	Drawer box		
7	712 044120.04	0G4918	Keps-Mutter M4	Keps nut M4		
8	82.2972	0G8251	Frontblech komplet	Front panel complete		
9	82.2990	0G8255	Schubladenauszug	Drawer		
10	82.3077	0G8256	Schubladenschacht	Drawer support		
11	82.6732.06	0G8247	Aufhängung Schublade	Drawer guide	D800	
	82.6732.07	0G8248	Aufhängung Schublade	Drawer guide	D850	
	82.6732.08	0G8249	Aufhängung Schublade	Drawer guide	D900	

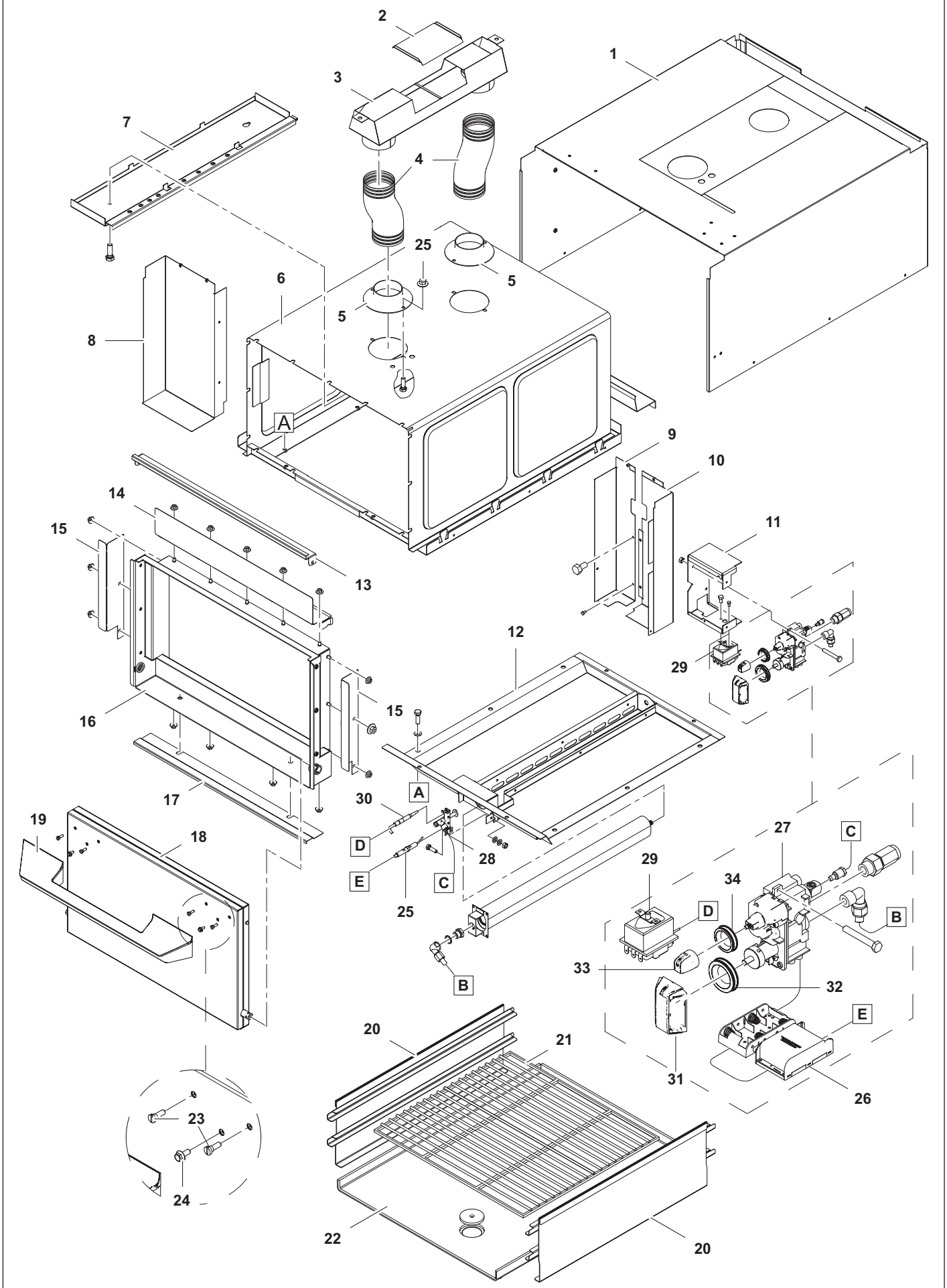

Doc. № 599A2AH00 / 82.8041.03

✱ Components on demand
✱ Teile auf Anfrage

6	Alias	Code	Bezeichnung	Description	Ref.	Valid from Serial N°
1	82.4639	✱	Cover Ofen	Cover oven	6 7 8 9 10 11 12 13 14 15	
2	82.4550	✱	Kaminboden	Chimney plate	6 7 8 9 10 11 12 13 14 15	
3	82.4547	✱	Abgaskanal	Flue	6 7 8 9 10 11 12 13 14 15	
4	82.2702		Abgasschlauch	Exhaust fume pipe	6 7 8 9 10 11 12 13 14 15	
5	82.4547		Rohrstutzen	Pipe socket	6 7 8 9 10 11 12 13 14 15	
6	62.6201	✱	Mantel Gasbackofen	Mantle Gas oven	6 7 8 9 10 11 12 13 14 15	
7	82.4591.01	✱	Abdeckung Abgaskanal	Cover Flue	UL	
	82.4591.02	✱	Abdeckung Abgaskanal	Cover Flue	6 7 8 9 10 11 12 13 14 15	
8	82.4647.02		Luftkanal links	Air channel left	7 8 9 10 12 13 14 15	
	82.2776		Ventilationsbox links	Ventilation box left	6 11	
9	82.4596		Luftkanal rechts Teil 1	Air channel right part 1	7 8 9 10 12 13 14 15	
	82.2777		Ventilationsbox rechts	Ventilation box right	6 11	
10	82.4597		Luftkanal recht Teil 2	Luftkanal rechts part 2	7 8 9 10 12 13 14 15	
11	82.4266.01		Halter Mertik	Support Mertik	6 11	
	82.4266.02		Halter Mertik	Support Mertik	7 8 9 10 12 13 14 15	
12	62.6211	✱	Brennerwanne	Burner tub	6 7 8 9 10 11 12 13 14 15	
13	83.3048	✱	Abdeckblech Frontrahmen	Covering plate frontal frame	6 7 8 9 10 11 12 13 14 15	
14	82.2309	✱	Klemmblech oben	Clamping plate	6 7 8 9 10 11 12 13 14 15	
15	72.9822.02	✱	Klemmblech seitlich	Clamping plate sideways	6 7 8 9 10 11 12 13 14 15	
16	83.3044	✱	Frontrahmen Backofen	Frontal frame oven	6 7 8 9 10 11 12 13 14 15	
17	83.3047	✱	Abdeckblech Frontrahmen unten	Covering plate frontal frame bottom	6 7 8 9 10 11 12 13 14 15	
18	83.3450	0G6666	Backofentür	Oven door	6 7 8 9 10 11 12 13 14 15	
19	82.6500	0G7224	Türgriff	Door handle	6 7 8 9 10 11 12 13 14 15	
20	62.6216	0G5670	Rostführung	Grill rail	6 7 8 9 10 11 12 13 14 15	
21	1 110 1300	0K6412	Grillrost 2/1GN	Grill 2/1GN	6 7 8 9 10 11 12 13 14 15	
22	62.5618		Einlegeplatte	Bottom plate	6 7 8 9 10 11 12 13 14 15	
	83.1336	0G8296	Einlegeplatte 1-S UL	Bottom plate 1-S UL	for USA	
	83.9293	0G8297	Einlegeplatte 2-S UL	Bottom plate 2-S UL	for USA	
23	82.7352	093923	Schlitzschraube M5x12	Slotted screw M5x12	6 7 8 9 10 11 12 13 14 15	
24	82.7567		Sicherungsschraube M5x16	Locking screw M5x16	6 7 8 9 10 11 12 13 14 15	
25	752 040111	056754	Zuendkerze Sit	Ignition Sit	6 7 8 9 10 11 12 13 14 15	
26	82.7561	0G7885	Mertik Gas Kit	Mertik Gas Kit	6 7 8 9 10 11 12 13 14 15	
27	82.2437	0G7856	Gasventil Mertik Led Fry Top	Gas Valve Mertik Led Fry Top	6 7 8 9 10 11 12 13 14 15	
28	752 040110	0C0494	Zuendbrenner	Pilot Burner	6 7 8 9 10 11 12 13 14 15	
29	82.9053	004269	Safety Thermostat 360C-25K	Safety Thermostat 360C-25K	6 7 8 9 10 11 12 13 14 15	
	82.9166	0G8295	Safety Thermostat 360C-20K VDE	Safety Thermostat 360C-20K VDE	for USA	
30	72.7793	0C3162	Thermoelement	Thermocouple	6 7 8 9 10 11 12 13 14 15	
31	82.6637.04	0G7696	Drehgriff	Knob	6 7 8 9 10 11 12 13 14 15	
32	82.7010	0G6326	Dichtung Drehgriff Mertik	Knob seals Mertik	6 7 8 9 10 11 12 13 14 15	
33	82.7003	0G6345	Drehgriff Mertik	Knob Mertik	6 7 8 9 10 11 12 13 14 15	
34	82.7010	0G6327	Dichtung Drehgriff Mertik	Knob seals Mertik	6 7 8 9 10 11 12 13 14 15	
		0G8460	Mertik Funktionsled	Mertik control led		

✱ Components on demand
✱ Teile auf Anfrage

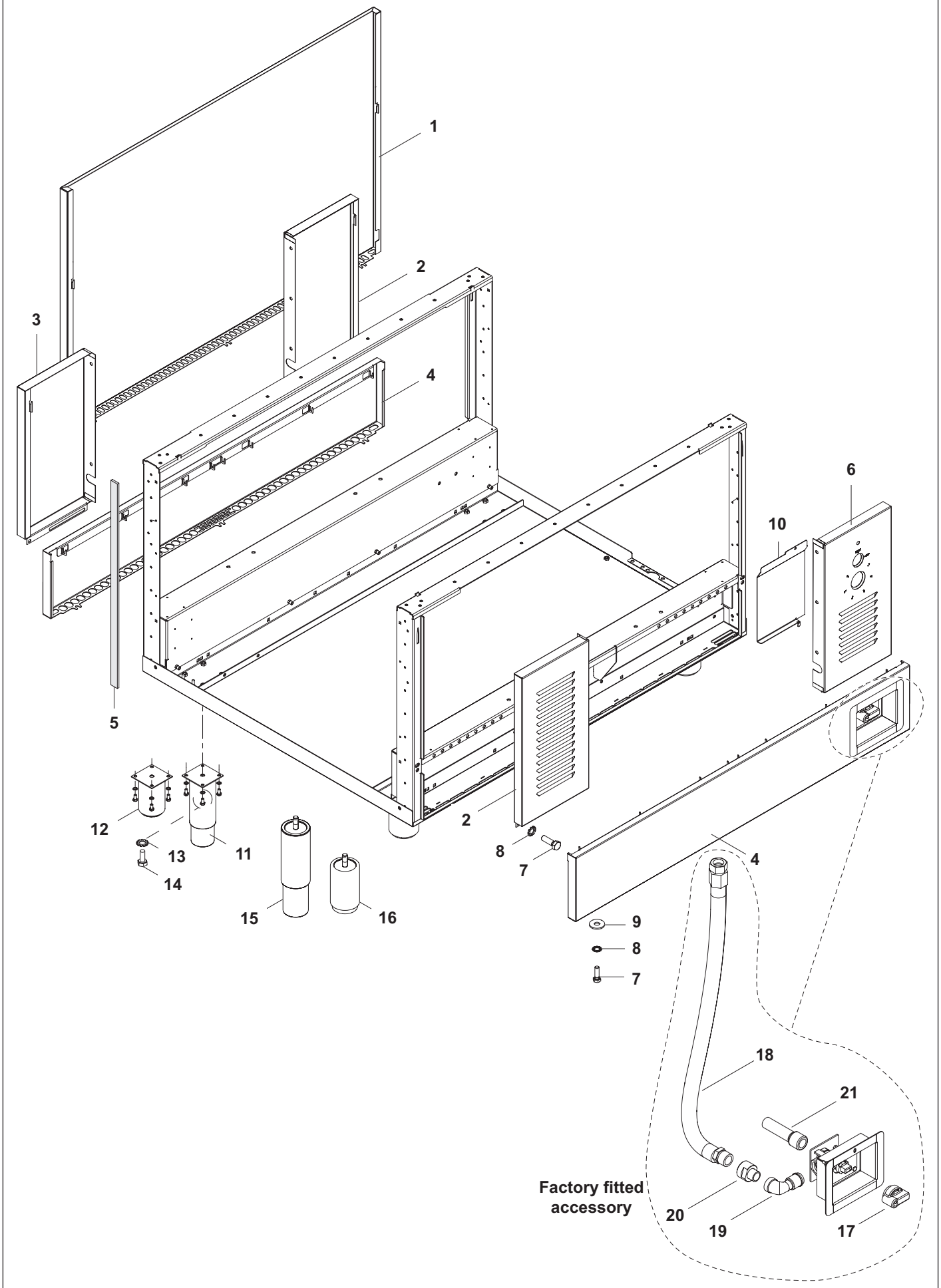

Doc. № 599A2AH00 / 82.8041.03

✱ Components on demand
✱ Teile auf Anfrage

7	Alias	Code	Bezeichnung	Description	Ref.	Valid from Serial N°
1	82.1102.09	✱	Rückwand 1000x700H	Rear panel 1000x700H	9 14	
	82.1102.29	✱	Rückwand 1000x800H	Rear panel 1000x800H	10 15	
2	82.7453.07		Blende links 201mm	Panel left 201mm	7 8 9 10 12 13 14 15	
	82.7465		Blende links 51mm links	Panel left 51mm	6 11	
3	82.7453.06		Blende rechts 201mm	Panel right 201mm	7 8 12 13	
4	82.1140.08	0G7288	Anschlussdeckel H66 / 800mm	Bottom front panel H66 / 800mm	6 11	
	82.1140.10	0G7901	Anschlussdeckel H66 / 1000mm	Bottom front panel H66 / 1000mm	7 9 12 14	
	82.1140.30	0G7792	Anschlussdeckel H166 / 1000mm	Bottom front panel H166 / 1000m	8 10 13 15	
5	82.7467	0C7307	Seitliche Dichtung	Sealing sideways	all types	
6	82.1149.01		Reglerblende Ofen 151mm (°C)	Control panel oven 151mm (°C)	6 11	
	82.1149.02		Reglerblende Ofen 201mm (°C)	Control panel oven 201mm (°C)	7 8 9 10 12 13 14 15	
7	1 701 3545	0KI298	U-Scheibe Ø6.4xØ18x1.6	Washer Ø6.4xØ18x1.6	all types	
8	1 701 7002	0G2923	Fächerscheibe M5	Fan washer M5	all types	
9	1 701 2579	0G4020	Schraube 6kt M5x16	Hex screw M5x16	all types	
10	82.4625.01	✱	Wassersschutzblech 800	Water protection plate 800	6 11	
	82.4625.02	✱	Wasserschutzblech 1000	Water protection plate 1000	7 8 9 10 12 13 14 15	
11	86.2385	0G6140	Fuss 2" 100mm	Foot 2" 100mm	8 10 13 15	
12	86.0001	0G5391	Fuss 2" 200mm	Fott 2" 200mm	6 7 9 11 12 14	
13	1 701 5051	0G6753	Fächerscheibe M6	Fan washer M6	all types	
14	1 701 2600	0KT919	Schraube 6kt M6x12	Hex screw M6x12	all types	
15	82.0350.01		Fuss M10 200mm	Foot M10 200mm	6 7 9 11 12 14	
16	82.0350.02		Fuss M10 100mm	Foot M10 100mm	8 10 13 15	
17	1 117 1252	0G2374	Gashahn 1/2"	Gas valve 1/2"	H800	
18	1 117 1286	0G6454	Gasschlauch	Gas hose	H800	
19	1 101 2162	0G6161	Einschraubwinkel 1/2"	Angle pipe fitting 1/2"	H800	
20	1 116 1233	0G8474	Muffennippel Reduziert 3/4" - 1/2"	Muff nipple reduced 3/4" - 1/2"	H800	
21	1 102 2397	0G3621	Verlängerung GF 526 1/2'-100	Extension GF 1/2"-100	H800	

✱ Components on demand
✱ Teile auf Anfrage

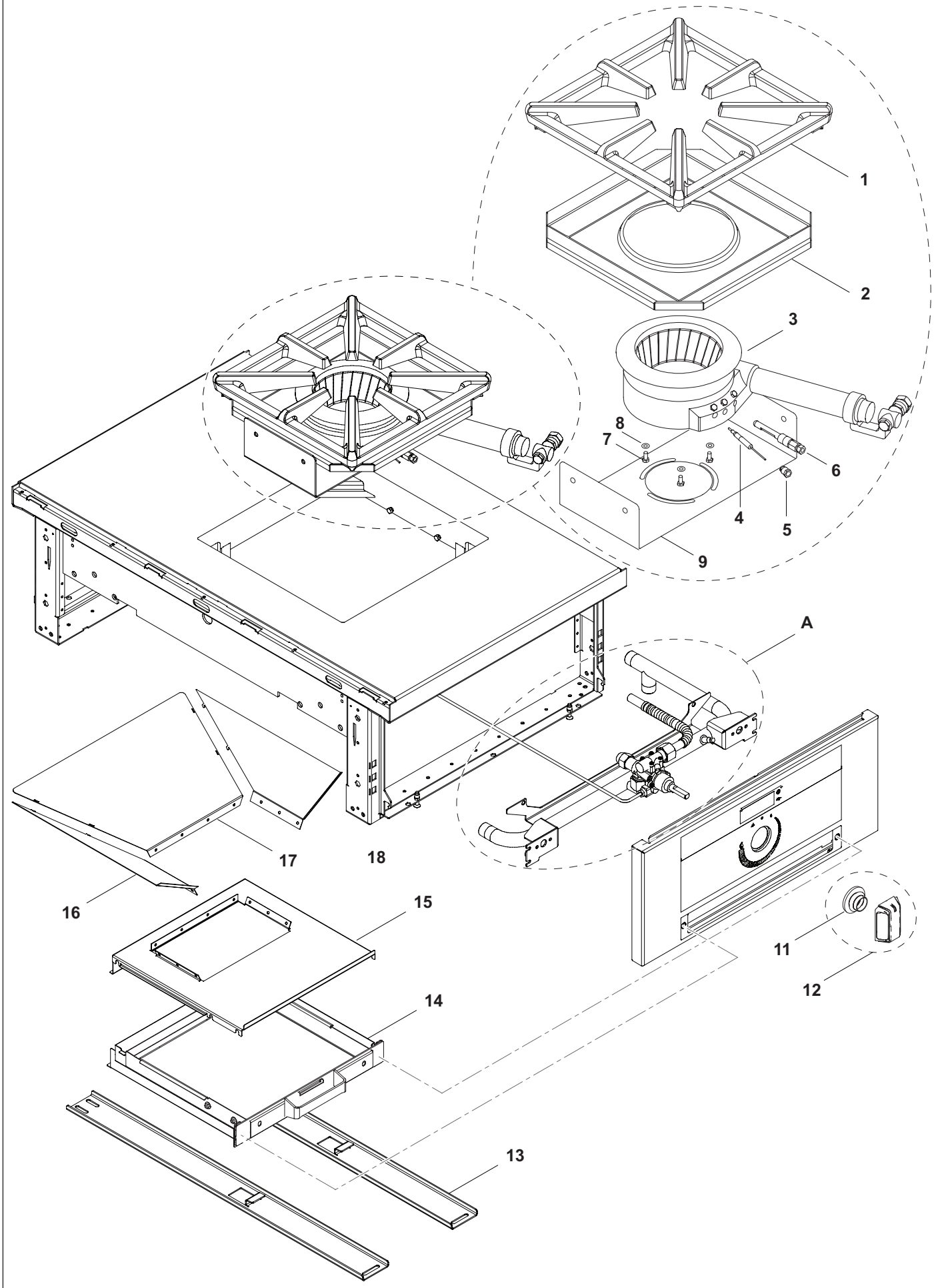

Doc. № 599A2AH00 / 82.8041.03

✱ Components on demand
✱ Teile auf Anfrage

8	Alias	Code	Bezeichnung	Description	Ref.	Valid from Serial N°
1	82.4718	0G8534	Gussupport	Cast support		
2	82.4717	✱	Schmutztropfblech	Dirt drip tray		
3	82.4719	0G8535	Brenner kpl.	Burner complete		
4	82.7325	0G6354	Thermocouple M9x1	Thermocouple M9x1		
5	1 106 1236	0C0121	Thermoelementschraube	Thermocouple screw		
6	82.4715	0G8536	Pilot Burner Volcan	Volcan Pilot burner		
7	1 701 2507	✱	Schraube 6kt M 5 x 10	Screw 6kt M 5 x 10		
8	1 701 3535	✱	U-Scheibe Ø5.3 x Ø10 x 1	Washer Ø5.3 x Ø10 x 1		
9	82.4709	✱	Brennertraverse 9kW 1Z	Burner crossbeam 9kW 1Z		
10	82.1027.142	0G8531	Bedienblende kompl. Single Burner 500	Control panel cpl. Single Burner 500		
11	82.7009	0G6247	Dichtung Drehgriff	Sealing for hande		
12	82.6637.05	0G7697	Drehgriff Kpl.	Handle complete kit		
13	82.6732.03	0G8257	Aufhängung Schublade	Drawer guide		
14	82.2981	0G8533	Schublade kpl. montiert	Complete mounted drawer		
15	82.4714	0G8532	Schubladenabdeckung	Drawer cover		
16	82.4723.01	✱	Schubladetrichter links	Drawer funnel left		
17	82.4722	✱	Schubladetrichter hinten	Drawer funnel back		
18	82.4723.02	✱	Schubladetrichter recht	Drawer funnel right		
A	Refer to "Gas line" chapter					

Electrolux

thermaline 80 / 85 / 90 Nozzle list / Düsentabelle

Appliance:	Nominal heat input :	Factory Model:	Range:	Doc N°
Open Burner	**10 kW** (8,5 kW with Town Gas)	**MxGxAxxxP/V/Wx**	**800 / 850 / 900**	**82.8041.04**

		GAS TYPE	COUNTRY	NOMINAL PRESS.	GAS TYPE Testgas	CATAGORY	Pressure Regulator ±1%	Nozzle main burner (Abb. 2)				Small adjusting nozzle (Abb. 3)			Nozzle ignition burner (Abb. 4)			Aeration adj. PILOT BURNER X (mm) (Abb. 5)	Aeration adj. MAIN BURNER D (mm) (Abb. 1)	Gas Consum.	Gas consumption Lt/min 956.5 mbar Baro / 20°C Sursee Allmendstrasse		
								Type	mm	Alias N°	Spare Part N°	mm	Alias N°	Spare Part N°	N°	Alias N°	Spare Part N°				Min.	Nominal-value	Max.
Town Gas	1	G 110	DK, SE	8	G110	1a	-	1)	4.70	72.7801.37	0G6602	Adjust	2 turns	-	75	82.7390	053669	3.0	10.0	2.58 m3/h	35.62 *9.22*	37.50 ** 9.70*	39.37 *10.68*
	2	G 120	SE		G120	1b	-	1)	4.20	72.7801.42	0C0703	Adjust	2 turns	-	75	82.7390	053669	3.0	9.0	2.02 m3/h	31.82 *8.24*	33.49 ** 8.67*	35.17 *9.54*
Natural Gas	3	Natural Gas H	HU	25	G20	2H	-	1)	2.20	72.7801.09	0A2083	1.05	712 345064.42	002992	41	72.7754	0KT740	0.0	0.0	1.06 m3/h	17.05	17.94	18.84
	4				G25.1	2S	-	1)	2.50	72.7801.18	059382	1.05	712 345064.42	002992	41	72.7754	0KT740	0.0	10.0	1.23 m3/h	19.73	20.77	21.81
	5		AT, CH, DK, EE, ES, FI, GB, GR, IE, IT, LV, NO, PT, SE, SI, SK, BG, CZ, HR, LT, RO, TR, CZ	20	G20	2H	-	1)	2.35	72.7801.17	0A5356	1.05	712 345064.42	002992	41	72.7754	0KT740	0.0	0.0	1.06 m3/h	17.05	17.94	18.84
	6	Natural Gas E	DE, LU, PL	20	G20	2E	-	1)	2.35	72.7801.17	0A5356	1.05	712 345064.42	002992	41	72.7754	0KT740	0.0	0.0	1.06 m3/h	17.05	17.94	18.84
	7	Natural Gas H/L Pressure Couple	BE, FR	20/25	G20	2E+	-	1)	2.35	72.7801.17	0A5356	1.05	712 345064.42	002992	41	72.7754	0KT740	0.0	0.0	1.06 m3/h	17.05	17.94	18.84
	8				G25																		
	9	Natural Gas L	NL	25	G25	2L	-	1)	2.45	72.7801.11	058980	1.05	712 345064.42	002992	41	72.7754	0KT740	0.0	7.0	1.23 m3/h	19.73	20.77	21.81
	10	Natural Gas LL	DE	20	G25	2LL	-	1)	2.55	72.7801.41	059529	1.05	712 345064.42	002992	41	72.7754	0KT740	0.0	8.0	1.23 m3/h	19.83	20.87	21.91
Liquid Gas	11	Propan	CH, DE, FR, HU, NL	50	G31	3P	-	2)	1.50	82.7388.08	0G6606	0.65	712 345064.18	0K5872	25	72.7755	054593	3.0	8.0	0.79 Kg/h	6.40	6.74	7.07
	12	Butan/ Propan	PL	37	G30/31	3B/P	-	2)	1.50	82.7388.08	0G6606	0.70	712 345064.38	0G6594	25	72.7755	054593	3.0	0.0	0.78 Kg/h	4.91	5.17	5.43
	13		CZ, CY, DK, EE, FI, HU, LV, LT, MT, NL, NO, SE, SI, SK, BG, HR, IS, RO, TR	30			-	2)	1.55	82.7388.09	0G6533	0.75	712 345064.22	0KK127	25	72.7755	054593	3.0	0.0	0.78 Kg/h	4.95	5.21	5.47
	14		AT, CH, DE	50			-	2)	1.35	82.7388.06	0G6604	0.65	712 345064.18	0K5872	25	72.7755	054593	3.0	8.0	0.78 Kg/h	4.85	5.11	5.36
	15	Butangas Propan Pressure Couple	BE, CH, ES, FR, GB, GR, IE, IT, PT, LT, SI, CZ, EE, LV, SK	28-30 / 37	G30/31	3+	-	2)	1.55	82.7388.09	0G6533	0.75	712 345064.22	0KK127	25	72.7755	054593	3.0	0.0	0.78 Kg/h	4.95	5.21	5.47

Abb. 1

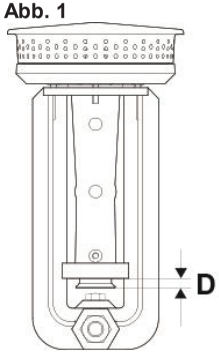

Abb. 2

Type 1)

72.7801.xx

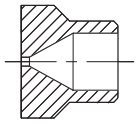

Type 2)

82.7388.xx

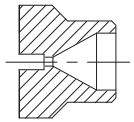

Abb. 3

** Value Small adjusting*

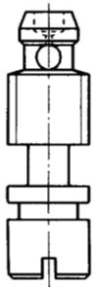

Abb. 4

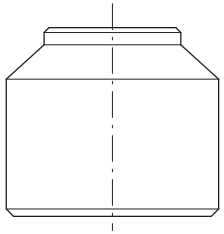

Abb. 5

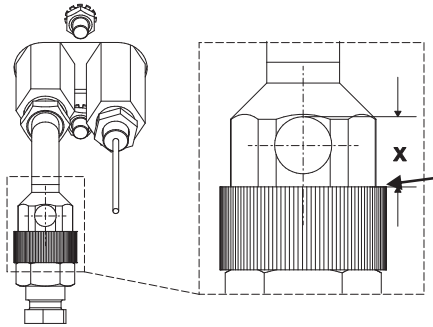

Seal with a drop of Loctite 243

Electrolux

thermaline 80 / 85 / 90 Nozzle list / Düsentabelle

Appliance:	Nominal heat input :	Factory Model:	Range:	Doc N°
Open Burner	**5 kW** (5 kW with Town Gas)	**MxGxAxxxP/V/Wx**	**800 / 850 / 900**	**82.8041.04**

		GAS TYPE	COUNTRY	NOMINAL PRESS.	GAS TYPE Testgas	CATAGORY	Pressure Regulator ±1%	Nozzle main burner (Abb. 2)				Small adjusting nozzle (Abb. 3)			Nozzle ignition burner (Abb. 4)			Aeration adj. PILOT BURNER X (mm) (Abb. 5)	Aeration adj. MAIN BURNER D (mm) (Abb. 1)	Gas Consum.	Gas consumption Lt/min 956.5 mbar Baro / 20°C Sursee Allmendstrasse		
								Type	mm	Alias N°	Spare Part N°	mm	Alias N°	Spare Part N°	N°	Alias N°	Spare Part N°				Min.	Nominal -value	Max.
Town Gas	1	G 110	DK, SE	8	G110	1a	-	1)	3,25	72.7801.44	002916	Adjust	2 turns	-	75	82.7390	053669	3.0	8.0	1.29 m3/h	20.95 *5.45*	22.06 ** 5.73*	23.16 *6.31*
Town Gas	2	G 120	SE		G120	1b	-	1)	3,00	72.7801.45	0A2090	Adjust	2 turns	-	75	82.7390	053669	3.0	8.0	1.01 m3/h	18.72 *4.87*	19.70 ** 5.12*	20.69 5.63
Natural Gas	3	Natural Gas H	HU	25	G20	2H	-	1)	1,55	72.7801.04	0A2103	0,80	712 345064.40	056743	41	72.7754	0KT740	0.0	7.0	0.53 m3/h	8.52	8.97	9.42
Natural Gas	4				G25.1	2S	-	1)	1,75	72.7801.34	059315	0,80	712 345064.40	056743	41	72.7754	0KT740	0.0	8.0	0.61 m3/h	9.86	10.38	10.90
Natural Gas	5		AT, CH, DK, EE, ES, FI, GB, GR, IE, IT, LV, NO, PT, SE, SI, SK, BG, CZ, HR, LT, RO, TR, CZ	20	G20	2H	-	1)	1,65	72.7801.19	0A2141	0,80	712.345064.40	056743	41	72.7754	0KT740	0.0	7.0	0.53 m3/h	8.52	8.97	9.42
Natural Gas	6	Natural Gas E	DE, LU, PL	20	G20	2E	-	1)	1,65	72.7801.19	0A2141	0,80	712.345064.40	056743	41	72.7754	0KT740	0.0	7.0	0.53 m3/h	8.52	8.97	9.42
Natural Gas	7	Natural Gas H/L Pressure Couple	BE, FR	20/25	G20	2E+	-	1)	1,65	72.7801.19	0A2141	0,80	712 345064.40	056743	41	72.7754	0KT740	0.0	7.0	0.53 m3/h	8.52	8.97	9.42
Natural Gas	8				G25																		
Natural Gas	9	Natural Gas L	NL	25	G25	2L	-	1)	1,75	72.7801.44	002916	0,75	712 345064.22	0KK127	41	72.7754	0KT740	0.0	8.0	0.61 m3/h	9.86	10.38	10.90
Natural Gas	10	Natural Gas LL	DE	20	G25	2LL	-	1)	1,85	72.7801.45	0A2090	0,80	712 345064.40	056743	41	72.7754	0KT740	0.0	8.0	0.61 m3/h	9.91	10.44	10.96
Liquid Gas	11	Propan	CH, DE, FR, HU, NL	50	G31	3P	-	2)	1,05	82.7388.01	0G6603	0,45	712.345064.23	0KD856	25	72.7755	054593	3.0	6.0	0.39 kg/h	3.20	3.37	3.54
Liquid Gas	12	Butan/ Propan	PL	37	G30/31	3B/P	-	2)	1,05	82.7388.01	0G6603	0,45	712 345064.23	0KD856	25	72.7755	054593	3.0	0.0	0.39 kg/h	2.46	2.59	2.71
Liquid Gas	13		CZ, CY, DK, EE, FI, HU, LV, LT, MT, NL, NO, SE, SI, SK, BG, HR, IS, RO, TR	30			-	2)	1,10	82.7388.02	0G6518	0,50	712 345064.25	0T2199	25	72.7755	054593	3.0	0.0	0.39 kg/h	2.48	2.61	2.74
Liquid Gas	14		AT, CH, DE	50			-	2)	1,00	82.7388.10	0G6607	0,45	712 345064.23	0KD856	25	72.7755	054593	3.0	6.0	0.39 kg/h	2.43	2.55	2.68
Liquid Gas	15	Butangas Propan Pressure Couple	BE, CH, ES, FR, GB, GR, IE, IT, PT, LT, SI, CZ, EE, LV, SK	28-30 / 37	G30/31	3+	-	2)	1,10	82.7388.02	0G6518	0,50	712 345064.25	0T2199	25	72.7755	054593	3.0	0.0	0.39 kg/h	2.48	2.61	2.74

Abb. 1

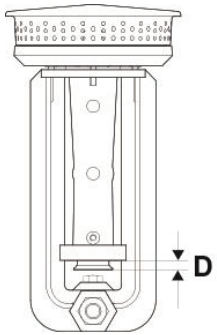

Abb. 2

Type 1)

72.7801.xx

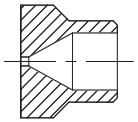

Type 2)

82.7388.xx

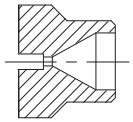

Abb. 3

** Value Small adjusting*

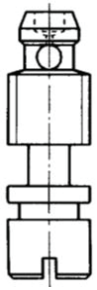

Abb. 4

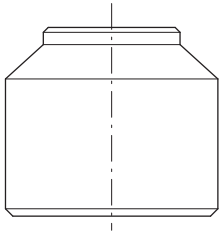

Abb. 5

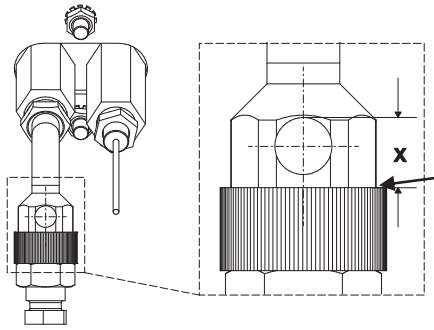

Seal with a drop of Loctite 243

Electrolux

thermaline 80 / 85 / 90 Nozzle list / Düsentabelle

Appliance:	Nominal heat input :	Factory Model:	Range:	Doc N°
Open Burner	**7 kW** (6,5 kW with Town Gas)	**MxGxAxxxP/V/Wx**	**800 / 850 / 900**	**82.8041.04**

		GAS TYPE	COUNTRY	NOMINAL PRESS.	GAS TYPE Testgas	CATAGORY	Pressure Regulator ±1%	Nozzle main burner (Abb. 2)				Small adjusting nozzle (Abb. 3)			Nozzle ignition burner (Abb. 4)			Aeration adj. PILOT BURNER X (mm) (Abb. 5)	Aeration adj. MAIN BURNER D (mm) (Abb. 1)	Gas Consum.	Gas consumption Lt/min 956.5 mbar Baro / 20°C Sursee Allmendstrasse		
								Type	mm	Alias N°	Spare Part N°	mm	Alias N°	Spare Part N°	N°	Alias N°	Spare Part N°				Min.	Nominal -value	Max.
Town Gas	1	G 110	DK, SE	8	G110	1a	-	1)	4.20	72.7801.42	0C0703	Adjust	2 turns	-	75	82.7390	053669	3.0	8.0	1.80 m3/h	27.24 *6.29*	28.67 ** 6.62*	30.11 *7.28*
	2	G 120	SE		G120	1b	-	1)	3.60	72.7801.36	-	Adjust	2 turns	-	75	82.7390	053669	3.0	8.0	1.40 m3/h	24.33 *5.62*	25.61 ** 5.91*	26.89 *6.50*
Natural Gas	3	Natural Gas H	HU	25	G20	2H	-	1)	1.85	72.7801.24	0A2077	0.85	712 345064.26	0G4163	41	72.7754	0KT740	0.0	0.0	0.74 m3/h	11.93	12.56	13.19
	4				G25.1	2S	-	1)	2.10	72.7801.31	0A2105	0.85	712 345064.26	0G4163	41	72.7754	0KT740	0.0	10.0	0.86 m3/h	13.81	14.54	15.26
	5		AT, CH, DK, EE, ES, FI, GB, GR, IE, IT, LV, NO, PT, SE, SI, SK, BG, CZ, HR, LT, RO, TR, CZ	20	G20	2H	-	1)	1.95	72.7801.43	0A2301	0.85	712 345064.26	0G4163	41	72.7754	0KT740	0.0	0.0	0.74 m3/h	11.93	12.56	13.19
	6	Natural Gas E	DE, LU, PL	20	G20	2E	-	1)	1.95	72.7801.43	0A2301	0.85	712.345064.26	0G4163	41	72.7754	0KT740	0.0	0.0	0.74 m3/h	11.93	12.56	13.19
	7	Natural Gas H/L Pressure Couple	BE, FR	20/25	G20	2E+	-	1)	1.95	72.7801.43	0A2301	0.85	712.345064.26	0G4163	41	72.7754	0KT740	0.0	0.0	0.74 m3/h	11.93	12.56	13.19
	8				G25																		
	9	Natural Gas L	NL	25	G25	2L	-	1)	2.10	72.7801.31	0A2105	0.85	712 345064.26	0G4163	41	72.7754	0KT740	0.0	8.0	0.86 m3/h	13.81	14.54	15.26
	10	Natural Gas LL	DE	20	G25	2LL	-	1)	2.20	72.7801.31	0A2105	0.85	712 345064.26	0G4163	41	72.7754	0KT740	0.0	8.0	0.86 m3/h	13.88	14.61	15.34
Liquid Gas	11	Propan	CH, DE, FR, HU, NL	50	G31	3P	-	2)	1.25	82.7388.04	0G6456	0.55	712.345064.17	0K5871	25	72.7755	054593	3.0	9.0	0.55 Kg/h	4.48	4.72	4.95
	12	Butan/ Propan	PL	37	G30/31	3B/P	-	2)	1.25	82.7388.04	0G6456	0.55	712 345064.17	0K5871	25	72.7755	054593	3.0	0.0	0.54 Kg/h	3.44	3.62	3.80
	13		CZ, CY, DK, EE, FI, HU, LV, LT, MT, NL, NO, SE, SI, SK, BG, HR, IS, RO, TR	30			-	2)	1.30	82.7388.05	0G6532	0.60	712 345064.28	0KD905	25	72.7755	054593	3.0	0.0	0.54 Kg/h	3.47	3.65	3.83
	14		AT, CH, DE	50			-	2)	1.15	82.7388.03	0G6465	0.50	712 345064.25	0T2199	25	72.7755	054593	3.0	8.0	0.54 Kg/h	3.40	3.57	3.75
	15	Butangas Propan Pressure Couple	BE, CH, ES, FR, GB, GR, IE, IT, PT, LT, SI, CZ, EE, LV, SK	28-30 / 37	G30/31	3+	-	2)	1.30	82.7388.05	0G6532	0.60	712 345064.28	0KD905	25	72.7755	054593	3.0	0.0	0.54 Kg/h	3.47	3.65	3.83

Abb. 1

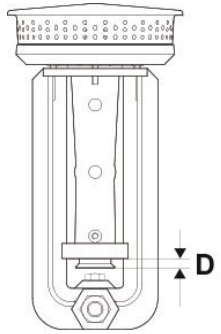

Abb. 2

Type 1)

72.7801.xx

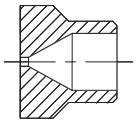

Type 2)

82.7388.xx

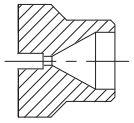

Abb. 3

** Value Small adjusting*

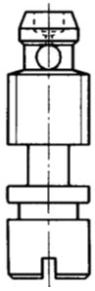

Abb. 4

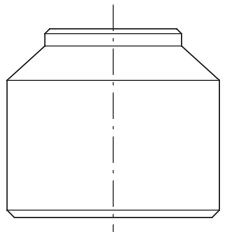

Abb. 5

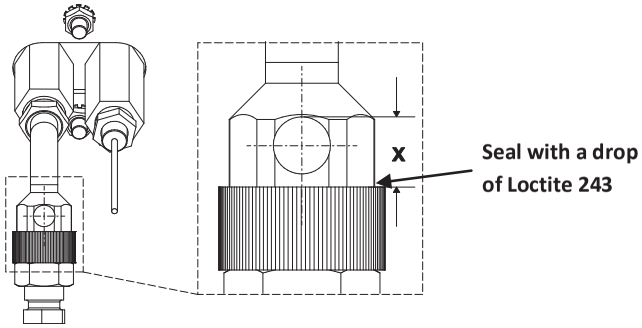

Electrolux

thermaline 80 / 85 / 90 Nozzle list / Düsentabelle

Appliance:	Nominal heat input :	Factory Model:	Range:	Doc N°
Gas Wok	**12 kW**	**MxWxAxxxPx**	**800 / 850 / 900**	**82.8041.04**

		GAS TYPE	COUNTRY	NOMINAL PRESS.	GAS TYPE Test gas	CATAGORY	Pressure Regulator ±1%	Nozzle main burner (Abb. 2)				Small adjusting nozzle (Abb. 3)			Nozzle ignition burner (Abb. 4)			Aeration adj. PILOT BURNER X (mm) (Abb. 4)	Aeration adj. MAIN BURNER D (mm) (Abb. 1)	Gas Consum.	Gas consumption Lt/min 956.5 mbar Baro / 20°C Sursee Allmendstrasse		
								Type	mm	Alias N°	Spare Part N°	mm	Alias N°	Spare Part N°	N°	Alias N°	Spare Part N°				Min.	Nominal -value	Max.
Town Gas	1	G 110	DK, SE	8	G110	1a	-	-	-	-	-	-	-	-	-	-	-	-	-	-	-	-	-
Town Gas	2	G 120	SE		G120	1b	-	-	-	-	-	-	-	-	-	-	-	-	-	-	-	-	-
Natural Gas	3	Natural Gas H	HU	25	G20	2H	-	-	-	-	-	-	-	-	-	-	-	-	-	-	-	-	-
Natural Gas	4				G25.1	2S	-	-	-	-	-	-	-	-	-	-	-	-	-	-	-	-	-
Natural Gas	5		AT, CH, DK, EE, ES, FI, GB, GR, IE, IT, LV, NO, PT, SE, SI, SK, BG, CZ, HR, LT, RO, TR, CZ	20	G20	2H	-	1)	2,60	72.7801.39	**0A2570**	1,05	712 345064.42	**002992**	41	72.7754	**0KT740**	0.0	10.0	1.27	20.46	21.53	22.61
Natural Gas	6	Natural Gas E	DE, LU, PL	20	G20	2E	-	-	-	-	-	-	-	-	-	-	-	-	-	-	-	-	-
Natural Gas	7	Natural Gas H/L Pressure Couple	BE, FR	20/25	G20	2E+	-	1)	2,60	72.7801.39	**0A2570**	1,05	712 345064.42	**002992**	41	72.7754	**0KT740**	0.0	10.0	1.27	20.46	21.53	22.61
Natural Gas	8				G25																		
Natural Gas	9	Natural Gas L	NL	25	G25	2L	-	-	-	-	-	-	-	-	-	-	-	-	-	-	-	-	-
Natural Gas	10	Natural Gas LL	DE	20	G25	2LL	-	-	-	-	-	-	-	-	-	-	-	-	-	-	-	-	-
Liquid Gas	11	Propan	CH, DE, FR, HU, NL	50	G31	3P	-	-	-	-	-	-	-	-	-	-	-	-	-	-	-	-	-
Liquid Gas	12	Butan/ Propan	PL	37	G30/31	3B/P	-	-	-	-	-	-	-	-	-	-	-	-	-	-	-	-	-
Liquid Gas	13		CZ, CY, DK, EE, FI, HU, LV, LT, MT, NL, NO, SE, SI, SK, BG, HR, IS, RO, TR	30			-	2)	1,70	82.7388.11	**059336**	1,20	712 345064.21	**0K5847**	25	72.7755	**054593**	3.0	4.0	0.95	5.94	6.25	6.57
Liquid Gas	14		AT, CH, DE	50			-	-	-	-	-	-	-	-	-	-	-	-	-	-	-	-	-
Liquid Gas	15	Butangas Propan Pressure Couple	BE, CH, ES, FR, GB, GR, IE, IT, PT, LT, SI, CZ, EE, LV, SK	28-30 / 37	G30/31	3+	-	2)	1,70	82.7388.11	**059336**	1,20	712 345064.21	**0K5847**	25	72.7755	**054593**	3.0	4.0	0.95	5.94	6.25	6.57

Abb. 1

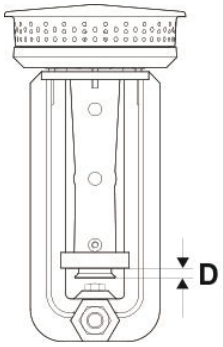

Abb. 2

Type 1)

72.7801.xx

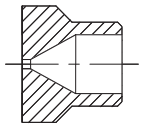

Type 2)

82.7388.xx

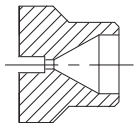

Abb. 3

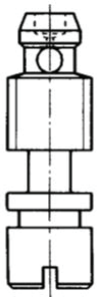

Abb. 4

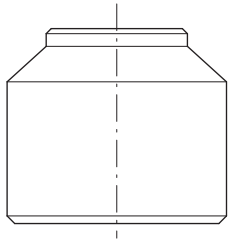

Abb. 5

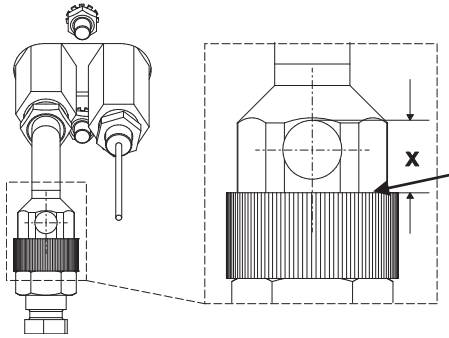

Seal with a drop of Loctite 243

Electrolux

thermaline 80 / 85 / 90 Nozzle list / Düsentabelle

Appliance:	Nominal heat input :	Factory Model:	Range:	Doc N°
Single Burner	**9 kW**	**MxGxAxxxPx**	**800 / 850 / 900**	**82.8355.04**

		GAS TYPE	COUNTRY	NOMINAL PRESS.	GAS TYPE Test gas	CATAGORY	Pressure Regulator ±1%	Nozzle main burner (Abb. 2)				Small adjusting nozzle (Abb. 3)			Nozzle ignition burner (Abb. 4)			Aeration adj. PILOT BURNER X (mm) (Abb. 4)	Aeration adj. MAIN BURNER D (mm) (Abb. 1)	Gas Consum.	Gas consumption Lt/min 956.5 mbar Baro / 20°C Sursee Allmendstrasse		
								Type	mm	Alias N°	Spare Part N°	mm	Alias N°	Spare Part N°	N°	Alias N°	Spare Part N°				Min.	Nominal -value	Max.
Town Gas	1	G 110	DK, SE	8	G110	1a	-	B	4.50	71.4160.450	-	Adjust	3 turns	-	60	To create	To create	-	9	2.32	37.72	39.70	43.67
Town Gas	2	G 120	SE		G120	1b	-	B	4.30	71.4160.430	-	Adjust	3 turns	-	60	To create	To create	-	9	2.07	33.69	35.46	39.01
Natural Gas	3	Natural Gas H	HU	25	G20	2H	-	B	2.10	71.4160.210	-	1.10	712 345064.39	-	35	82.4724	0M2943	-	20	0.95	15.27	16.07	16.87
Natural Gas	4				G25.1	2S	-	B	2.50	71.4160.250	OT2210	1.10	712 345064.39	-	35	82.4724	0M2943	-	20	1.71	17.76	18.69	19.63
Natural Gas	5		AT, CH, DK, EE, ES, FI, GB, GR, IE, IT, LV, NO, PT, SE, SI, SK, BG, CZ, HR, LT, RO, TR, CZ	20	G20	2H	-	B	2.20	71.4160.220	0G3763	1.10	712 345064.39	0M0800	35	82.4724	0M2943	-	20	0.95	15.34	16.15	16.96
Natural Gas	6	Natural Gas E	DE, LU, PL	20	G20	2E	-	B	2.20	71.4160.220	0G3763	1.10	712 345064.39	-	35	82.4724	0M2943	-	20	0.95	15.34	16.15	16.96
Natural Gas	7	Natural Gas H/L Pressure Couple	BE, FR	20/25	G20	2E+	-	B	2.20	71.4160.220	0G3763	1.10	712 345064.39	0M0800	35	82.4724	0M2943	-	20	0.95	15.34	16.15	16.96
Natural Gas	8				G25																		
Natural Gas	9	Natural Gas L	NL	25	G25	2L	-	B	2.30	71.4161.230	OKX222	1.10	712 345064.39	-	35	82.4724	0M2943	-	20	1.71	17.76	18.69	19.63
Natural Gas	10	Natural Gas LL	DE	20	G25	2LL	-	B	2.60	71.4160.260	OG3048	1.10	712 345064.39	-	35	82.4724	0M2943	-	20	1.71	17.84	18.78	19.72
Liquid Gas	11	Propan	CH, DE, FR, HU, NL	50	G31	3P	-	-	-	-	-	-	-	-	-	-	-	-	-	-	-	-	-
Liquid Gas	12	Butan/ Propan	PL	37	G30/31	3B/P	-	A	1.35		-	0.55	-	-	22	-	-	-	20	0.71	4.42	4.65	4.89
Liquid Gas	13		CZ, CY, EE, FI, HU, LV, LT, MT, NL, NO, SE, SI, SK, BG, HR, IS, RO, TR	30			-	A	1.45	71.4160.145	-	0.70	712 345064.38	0G6594	22	To create	No code	-	20	0.71	4.46	4.69	4.93
Liquid Gas	14		AT, CH, DE	50			-	A	1.30	71.4160.130	-	0.55	-	-	22	-	-	-	9	-	4.37	4.60	4.83
Liquid Gas	15	Butangas Propan Pressure Couple	BE, CH, ES, FR, GB, GR, IE, IT, PT, LT, SI, CZ, EE, LV, SK, DK	28-30 / 37	G30/31	3+	-	A	1.45	71.4160.145	-	0.70	712 345064.38	0G6594	22	To create	No code	-	20	0.71	4.46	4.69	4.93

Abb. 1

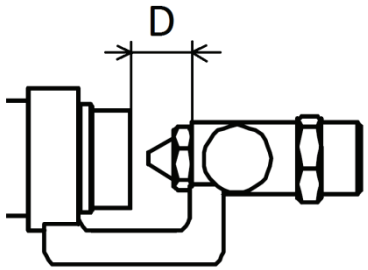

Abb. 2

71.4160

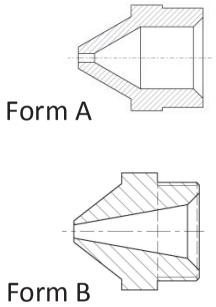

Abb. 3

712.34564.XX

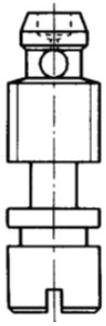

Abb. 4

82.4724

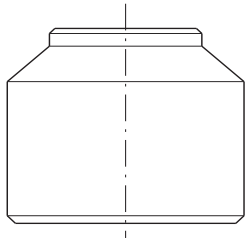

Electrolux

thermaline 80 / 85 / 90 — Nozzle list / Düsentabelle

Appliance:	Nominal heat input :	Factory Model	Range:	Doc N°
STATIC OVEN GAS	**7 kW**	**MXXXXXXCP/V/WX**	**800 / 850 / 900**	**82.8131.04**

		GAS TYPE	COUNTRY	NOMINAL PRESS.	GAS TYPE Test-gas	CATAGORY	Pressure Regulator ±1%	Nozzle C main burner (Abb. 2)				Small adjusting nozzle (Abb. 3)			Nozzle F ignition burner (Abb. 4)			Aeration adj. MAIN BURNER D (mm) (Abb. 1)	Spoiler sheet (Abb. 1)		Gas Consum.	Gas consumption Lt/min 956.5 mbar Baro / 20°C Sursee Allmendstrasse		
								Type	mm	Alias N°		mm	Alias N°	Spare Part N°	N°	Alias N°	Spare Part N°		Alias N°	Spare Part N°		Min.	Nominal-value	Max.
Town Gas	1	G 110	DK, SE	8	G110	1a	-	-	4.10	72.5080.05	0G6599		-	-	60	712 345056.04	0G4110	4.5	72.6824.01	-	1,81 m³/h	29.70	31.27	32.83
Town Gas	2	G 120	SE	8	G120	1b	-	-	3.80	72.5080.06	0G6600		-	-	60	712 345056.04	0G4110	4.5	72.6824.01	-	1,61 m³/h	26.43	27.82	29.21
Natural Gas	3	Natural Gas H	HU	25	G20	2H	-	-	1.90	72.5080.01	0G2776	1.30	62.2500.09	0G2771	40	712 345056.05	0G6594	4.5	72.6824.01	-	0,74 m³/h	11.93	12.56	13.19
Natural Gas	4	Natural Gas H	HU	25	G25.1	2S	-	-	2.15	72.5080.02	0G3421	1.30	62.2500.09	0G2771	40	712 345056.05	0G6594	4.5	72.6824.01	-	0,86 m³/h	13.81	14.54	15.26
Natural Gas	5	Natural Gas H	AT, CH, DK, EE, ES, FI, GB, GR, IE, IT, LV, NO, PT, SE, SI, SK, BG, CZ, HR, LT, RO, TR, CZ	20	G20	2H	-	-	2.00	72.5080.01	0G2776	1.30	62.2500.09	0G2771	40	712 345056.05	0G6594	4.5	72.6824.01	-	0,74 m³/h	11.93	12.56	13.19
Natural Gas	6	Natural Gas E	DE, LU, PL	20	G20	2E	-	-	2.00	72.5080.01	0G2776	1.30	62.2500.09	0G2771	40	712 345056.05	0G6594	4.5	72.6824.01	-	0,74 m³/h	11.93	12.56	13.19
Natural Gas	7	Natural Gas H/L Pressure Couple	BE, FR	20/25	G20	2E+	-	-	2.00	72.5080.01	0G2776	1.30	62.2500.09	0G2771	40	712 345056.05	0G6594	4.5	72.6824.01	-	0,74 m³/h	11.93	12.56	13.19
Natural Gas	8	Natural Gas H/L Pressure Couple	BE, FR	20/25		2E+																		
Natural Gas	9	Natural Gas L	NL	25	G25	2L	-	-	2.10	72.5080.02	0G3421	1.30	62.2500.09	0G2771	40	712 345056.05	0G6594	4.5	72.6824.01	-	0,86 m³/h	13.81	14.54	15.26
Natural Gas	10	Natural Gas LL	DE	20	G25	2LL	-	-	2.25	72.5080.15	-	1.30	62.2500.09	0G2771	40	712 345056.05	0G6594	4.5	72.6824.01	-	0,86 m³/h	13.88	14.61	15.34
Liquid Gas	11	Propan	CH, DE, FR, HU, NL	50	G31	3P	-	-	1.30	72.5080.03	0G2777	0.70	62.2500.12	0G4641	25	712 345056.06	0G2805	8.5	72.6824.02	0G2713	0,546 Kg/h	4.48	4.72	4.95
Liquid Gas	12	Butan/ Propan	PL	37	G30/31	3B/P	-	-	1.30	72.5080.03	0G2777	0.80	62.2500.02	0G4808	25	712 345056.06	0G2805	8.5	72.6824.02	0G2713	0,553 Kg/h	3.44	3.62	3.80
Liquid Gas	13	Butan/ Propan	CZ, CY, DK, EE, FI, HU, LV, LT, MT, NL, NO, SE, SI, SK, BG, HR, IS, RO, TR	30	G30/31	3B/P	-	-	1.40	72.5080.17	0G5767	0.80	62.2500.02	0G4808	25	712 345056.06	0G2805	8.5	72.6824.02	0G2713	0,553 Kg/h	3.47	3.65	3.83
Liquid Gas	14	Butan/ Propan	AT, CH, DE	50	G30/31	3B/P	-	-	1.20	72.5080.08	0G4636	0.70	62.2500.12	0G4641	25	712 345056.06	0G2805	8.5	72.6824.02	0G2713	0,553 Kg/h	3.40	3.57	3.75
Liquid Gas	15	Butangas Propan Pressure Couple	BE, CH, ES, FR, GB, GR, IE, IT, PT, LT, SI, CZ, EE, LV, SK	28-30 / 37	G30/31	3+	-	-	1.40	72.5080.17	0G5767	0.80	62.2500.02	0G4808	25	712 345056.06	0G2805	8.5	72.6824.02	0G2713	0,553 Kg/h	3.47	3.65	3.83

Abb. 1

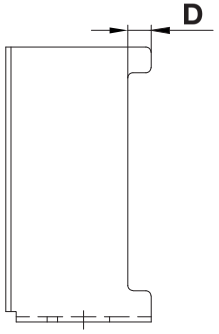

Abb. 2

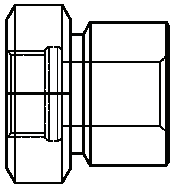

Abb.3

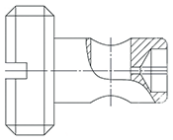
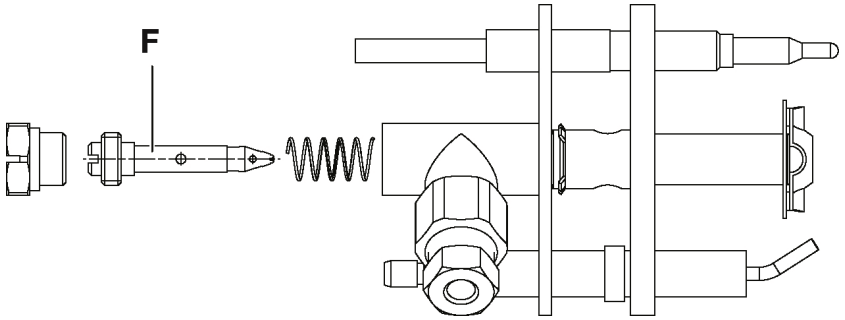
Abb.4