Electrolux

SPARE PARTS CATALOGUE

THERMALINE 80/85/90

DE EL. GROSSKOCHPLATTEN 2 ZONEN & 4 ZONEN
EN EL. SOLID TOPS 2 ZONES & 4 ZONES

Ref.	Description
a	2 Zones, 1-Side operated, H250, D800
b	4 Zones, 1-Side operated, H250, D800
c	2 Zones, 1-Side operated, H250, D900
d	4 Zones, 1-Side operated, H250, D900
e	2 Zones, 1-Side operated, H250, D850
f	4 Zones, 1-Side operated, H250, D850
g	2 Zones, 2-Side operated, H250, D800
h	4 Zones, 2-Side operated, H250, D800
i	2 Zones, 2-Side operated, H250, D900
j	4 Zones, 2-Side operated, H250, D900
k	2 Zones, 1-Side operated, H700, D800
l	4 Zones, 1-Side operated, H700, D800
m	2 Zones, 1-Side operated, H700, D900
n	4 Zones, 1-Side operated, H700, D900
o	2 Zones, 1-Side operated, H700, D850
p	4 Zones, 1-Side operated, H700, D850
q	2 Zones, 2-Side operated, H700, D800
r	4 Zones, 2-Side operated, H700, D800
s	2 Zones, 2-Side operated, H700, D900
t	4 Zones, 2-Side operated, H700, D900

Ref.	Description
u	2 Zones, 1-Side operated, H800, D800
v	4 Zones, 1-Side operated, H800, D800
w	2 Zones, 1-Side operated, H800, D900
x	4 Zones, 1-Side operated, H800, D900
y	2 Zones, 2-Side operated, H800, D800
z	4 Zones, 2-Side operated, H800, D800
1	2 Zones, 2-Side operated, H800, D900
2	4 Zones, 2-Side operated, H800, D900
3	2 Zones, 1-Side operated, H250, D900, Marine
4	4 Zones, 1-Side operated, H250, D900, Marine
5	2 Zones, 2-Side operated, H250, D900, Marine
6	4 Zones, 2-Side operated, H250, D900, Marine
7	2 Zones, 1-Side operated, H700, D900, Marine
8	4 Zones, 1-Side operated, H700, D900, Marine
9	2 Zones, 2-Side operated, H700, D900, Marine
10	4 Zones, 2-Side operated, H700, D900, Marine

Page	Index
4	Electrical components 2 zones
6	Mechanical module 2 zones
8	Electrical compartment 4 zones
12	Sparta box 4 zones
14	Mechanical module 4 zones
16	Drain and base *Standard H2
18	Rolling racks, drain and base *Marine H3
20	Aeration kit
22	Old grease drawer
24	New grease drawer
26	Terminal

Last Updates	Page	Ref.
12/2015	all	
01/2017	al	
04/2017	4/8/14/16	
11/2017	5/9	15/10
11/2017	7/13/15	5/4/19-20
11/2017	17	7, 9, 12, 13
01/2018	7	14, 15, 16
01/2018	5, 7, 8, 9, 10, 11, 13, 15	added spare parts for USA
02/2018	24, 25	new drawer
05/2018	17	21
08/2018	7, 15	1, 1

Valid from Ser. № 3101....

Doc. № 599A2AW00 / 82.8120.03

Brand: Electrolux

Appliances half module (2 Zones):

PNC	Factory Model	Ref.	Description
588000	MALAAAEOAO	a	EL.SOLID TOP, 2 ZONES, 1-SIDE, 500X800X250H
588001	MALAABEOAO	a	EL.SOLID TOP, 2 ZONES, 1-SIDE, C-BOARD, 500X800X250H
588002	MALAACEOAO	g	EL.SOLID TOP, 2 ZONES, 2-SIDES, 500X800X250H
588003	MALBAAEOAO	a	EL.SOLID TOP, 2 ZONES, ECO TOP, 1-SIDE, 500X800X250H
588004	MALBABEOAO	a	EL.SOLID TOP, 2 ZONES, ECO TOP, 1-SIDE, C-BOARD, 500X800X250H
588005	MALBACEOAO	g	EL.SOLID TOP, 2 ZONES, ECO TOP, 2-SIDES, 500X800X250H
588500	MBLABBEOAO	e	EL.SOLID TOP, 2 ZONES, 1-SIDE, C-BOARD, 500X850X250H
588501	MBLBBBEOAO	e	EL.SOLID TOP, 2 ZONES, ECO TOP, 1-SIDE, C-BOARD, 500X850X250H
589000	MCLAAAEOAO	c	EL.SOLID TOP, 2 ZONES, 1-SIDE, 500X900X250H
589001	MCLAABEOAO	c	EL.SOLID TOP, 2 ZONES, 1-SIDE, C-BOARD, 500X900X250H
589002	MCLAACEOAO	i	EL.SOLID TOP, 2 ZONES, 2-SIDES, 500X900X250H
589003	MCLBAAEOAO	c	EL.SOLID TOP, 2 ZONES, ECO TOP, 1-SIDE, 500X900X250H
589004	MCLBABEOAO	c	EL.SOLID TOP, 2 ZONES, ECO TOP, 1-SIDE, C-BOARD, 500X900X250H
589005	MCLBACEOAO	i	EL.SOLID TOP, 2 ZONES, ECO TOP, 2-SIDES, 500X900X250H
588338	MALAEAEDAO	k	EL.SOLID TOP UNIT, 2 ZONES, 1-SIDE, 500X800X700H
588339	MALAEBEDAO	k	EL.SOLID TOP UNIT, 2 ZONES, 1-SIDE, C-BOARD, 500X800X700H
588340	MALAECEDAO	q	EL.SOLID TOP UNIT, 2 ZONES, 2-SIDES, 500X800X700H
588341	MALBEAEDAO	k	EL.SOLID TOP UNIT, 2 ZONES, ECO TOP, 1-SIDE, 500X800X700H
588342	MALBEBEDAO	k	EL.SOLID TOP UNIT, 2 ZONES, ECO TOP, 1-SIDE, C-BOARD, 500X800X700H
588343	MALBECEDAO	q	EL.SOLID TOP UNIT, 2 ZONES, ECO TOP, 2-SIDES, 500X800X700H
588350	MALAFAEDAO	u	EL.SOLID TOP UNIT, 2 ZONES, 1-SIDE, 500X800X800H
588351	MALAFBEDAO	u	EL.SOLID TOP UNIT, 2 ZONES, 1-SIDE, C-BOARD, 500X800X800H
588352	MALAFCEDAO	y	EL.SOLID TOP UNIT, 2 ZONES, 2-SIDES, 500X800X800H
588353	MALBFAEDAO	u	EL.SOLID TOP UNIT, 2 ZONES, ECO TOP, 1-SIDE, 500X800X800H
588354	MALBFBEDAO	u	EL.SOLID TOP UNIT, 2 ZONES, ECO TOP, 1-SIDE, C-BOARD, 500X800X800H
588355	MALBFCEDAO	y	EL.SOLID TOP UNIT, 2 ZONES, ECO TOP, 2-SIDES, 500X800X800H
588680	MBLAGBEDAO	o	EL.SOLID TOP UNIT, 2 ZONES, 1-SIDE, C-BOARD, 500X850X700H
588681	MBLBGBEDAO	o	EL.SOLID TOP UNIT, 2 ZONES, ECO TOP, 1-SIDE, C-BOARD, 500X850X700H
589508	MCLAEAEDAO	m	EL.SOLID TOP UNIT, 2 ZONES, 1-SIDE, 500X900X700H
589509	MCLAEBEDAO	m	EL.SOLID TOP UNIT, 2 ZONES, 1-SIDE, C-BOARD, 500X900X700H
589510	MCLAECEDAO	s	EL.SOLID TOP UNIT, 2 ZONES, 2-SIDES, 500X900X700H
589511	MCLBEAEDAO	m	EL.SOLID TOP UNIT, 2 ZONES, ECO TOP, 1-SIDE, 500X900X700H
589512	MCLBEBEDAO	m	EL.SOLID TOP UNIT, 2 ZONES, ECO TOP, 1-SIDE, C-BOARD, 500X900X700H
589513	MCLBECEDAO	s	EL.SOLID TOP UNIT, 2 ZONES, ECO TOP, 2-SIDES, 500X900X700H
589520	MCLAFAEDAO	w	EL.SOLID TOP UNIT, 2 ZONES, 1-SIDE, 500X900X800H
589521	MCLAFBEDAO	w	EL.SOLID TOP UNIT, 2 ZONES, 1-SIDE, C-BOARD, 500X900X800H
589522	MCLAFCEDAO	1	EL.SOLID TOP UNIT, 2 ZONES, 2-SIDES, 500X900X800H
589523	MCLBFAEDAO	w	EL.SOLID TOP UNIT, 2 ZONES, ECO TOP, 1-SIDE, 500X900X800H
589524	MCLBFBEDAO	w	EL.SOLID TOP UNIT, 2 ZONES, ECO TOP, 1-SIDE, C-BOARD, 500X900X800H
589525	MCLBFCEDAO	1	EL.SOLID TOP UNIT, 2 ZONES, ECO TOP, 2-SIDES, 500X900X800H
589866	MCLAAAEODM	3	MARINE * SOLID TOP, 2 ZONES, 1-SIDE, 500X900X250H
589867	MCLAACEODM	5	MARINE * SOLID TOP, 2 ZONES, 2-SIDES, 500X900X250H
589868	MCLBAAEODM	3	MARINE * SOLID TOP, 2 ZONES, ECO TOP, 1-SIDE, 500X900X250H
589869	MCLBACEODM	5	MARINE * SOLID TOP, 2 ZONES, ECO TOP, 2-SIDES, 500X900X250H
589874	MCLVEAE1DM	7	MARINE * SOLID TOP UNIT, H3, 2 ZONES, 1-SIDE, 500X900X700H
589875	MCLVECE1DM	9	MARINE * SOLID TOP UNIT, H3, 2 ZONES, 2-SIDES, 500X900X700H
589876	MCLWEAE1DM	7	MARINE * SOLID TOP UNIT, H3, 2 ZONES, ECO TOP, 1-SIDE, 500X900X700H
589877	MCLWECE1DM	9	MARINE * SOLID TOP UNIT, H3, 2 ZONES, ECO TOP, 2-SIDES, 500X900X700H

✱ Components on demand
✱ Teile auf Anfrage

Appliances full module (4 Zones):

PNC	Factory Model	Ref.	Description
588006	MALCAAHOAO	b	EL.SOLID TOP, 4 ZONES, 1-SIDE, 800X800X250H
588007	MALCABHOAO	b	EL.SOLID TOP, 4 ZONES, 1-SIDE, C-BOARD, 800X800X250H
588008	MALCACHOAO	h	EL.SOLID TOP, 4 ZONES, 2-SIDES, 800X800X250H
588009	MALDAAHOAO	b	EL.SOLID TOP, 4 ZONES, ECO TOP, 1-SIDE, 800X800X250H
588010	MALDABHOAO	b	EL.SOLID TOP, 4 ZONES, ECO TOP, 1-SIDE, C-BOARD, 800X800X250H
588011	MALDACHOAO	h	EL.SOLID TOP, 4 ZONES, ECO TOP, 2-SIDES, 800X800X250H
588502	MBLCBBHOAO	f	EL.SOLID TOP, 4 ZONES, 1-SIDE, C-BOARD, 800X850X250H
588503	MBLDBBHOAO	f	EL.SOLID TOP, 4 ZONES, ECO TOP, 1-SIDE, C-BOARD, 800X850X250H
589006	MCLCAAJOAO	d	EL.SOLID TOP, 4 ZONES, 1-SIDE, 1000X900X250H
589007	MCLCABJOAO	d	EL.SOLID TOP, 4 ZONES, 1-SIDE, C-BOARD, 1000X900X250H
589008	MCLCACJOAO	j	EL.SOLID TOP, 4 ZONES, 2-SIDES, 1000X900X250H
589009	MCLDAAJOAO	d	EL.SOLID TOP, 4 ZONES, ECO TOP, 1-SIDE, 1000X900X250H
589010	MCLDABJOAO	d	EL.SOLID TOP, 4 ZONES, ECO TOP, 1-SIDE, C-BOARD, 1000X900X250H
589011	MCLDACJOAO	j	EL.SOLID TOP, 4 ZONES, ECO TOP, 2-SIDES, 1000X900X250H
588344	MALCEAHDAO	l	EL.SOLID TOP UNIT, 4 ZONES, 1-SIDE, 800X800X700H
588345	MALCEBHDAO	l	EL.SOLID TOP UNIT, 4 ZONES, 1-SIDE, C-BOARD, 800X800X700H
588346	MALCECHDAO	r	EL.SOLID TOP UNIT, 4 ZONES, 2-SIDES, 800X800X700H
588347	MALDEAHDAO	l	EL.SOLID TOP UNIT, 4 ZONES, ECO TOP, 1-SIDE, 800X800X700H
588348	MALDEBHDAO	l	EL.SOLID TOP UNIT, 4 ZONES, ECO TOP, 1-SIDE, C-BOARD, 800X800X700H
588349	MALDECHDAO	r	EL.SOLID TOP UNIT, 4 ZONES, ECO TOP, 2-SIDES, 800X800X700H
588356	MALCFAHDAO	v	EL.SOLID TOP UNIT, 4 ZONES, 1-SIDE, 800X800X800H
588357	MALCFBHDAO	v	EL.SOLID TOP UNIT, 4 ZONES, 1-SIDE, C-BOARD, 800X800X800H
588358	MALCFCHDAO	z	EL.SOLID TOP UNIT, 4 ZONES, 2-SIDES, 800X800X800H
588359	MALDFAHDAO	v	EL.SOLID TOP UNIT, 4 ZONES, ECO TOP, 1-SIDE, 800X800X800H
588360	MALDFBHDAO	v	EL.SOLID TOP UNIT, 4 ZONES, ECO TOP, 1-SIDE, C-BOARD, 800X800X800H
588361	MALDFCHDAO	z	EL.SOLID TOP UNIT, 4 ZONES, ECO TOP, 2-SIDES, 800X800X800H
588682	MBLCGBHDAO	p	EL.SOLID TOP UNIT, 4 ZONES, 1-SIDE, C-BOARD, 800X850X700H
588683	MBLDGBHDAO	p	EL.SOLID TOP UNIT, 4 ZONES, ECO TOP, 1-SIDE, C-BOARD, 800X850X700H
589514	MCLCEAJDAO	n	EL.SOLID TOP UNIT, 4 ZONES, 1-SIDE, 1000X900X700H
589515	MCLCEBJDAO	n	EL.SOLID TOP UNIT, 4 ZONES, 1-SIDE, C-BOARD, 1000X900X700H
589516	MCLCECJDAO	t	EL.SOLID TOP UNIT, 4 ZONES, 2-SIDES, 1000X900X700H
589517	MCLDEAJDAO	n	EL.SOLID TOP UNIT, 4 ZONES, ECO TOP, 1-SIDE, 1000X900X700H
589518	MCLDEBJDAO	n	EL.SOLID TOP UNIT, 4 ZONES, ECO TOP, 1-SIDE, C-BOARD, 1000X900X700H
589519	MCLDECJDAO	t	EL.SOLID TOP UNIT, 4 ZONES, ECO TOP, 2-SIDES, 1000X900X700H
589526	MCLCFAJDAO	x	EL.SOLID TOP UNIT, 4 ZONES, 1-SIDE, 1000X900X800H
589527	MCLCFBJDAO	x	EL.SOLID TOP UNIT, 4 ZONES, 1-SIDE, C-BOARD, 1000X900X800H
589528	MCLCFCJDAO	2	EL.SOLID TOP UNIT, 4 ZONES, 2-SIDES, 1000X900X800H
589529	MCLDFAJDAO	x	EL.SOLID TOP UNIT, 4 ZONES, ECO TOP, 1-SIDE, 1000X900X800H
589530	MCLDFBJDAO	x	EL.SOLID TOP UNIT, 4 ZONES, ECO TOP, 1-SIDE, C-BOARD, 1000X900X800H
589531	MCLDFCJDAO	2	EL.SOLID TOP UNIT, 4 ZONES, ECO TOP, 2-SIDES, 1000X900X800H
589870	MCLCAAJODM	4	MARINE * SOLID TOP, 4 ZONES, 1-SIDE, 1000X900X250H
589871	MCLCACJODM	6	MARINE * SOLID TOP, 4 ZONES, 2-SIDES, 1000X900X250H
589872	MCLDAAJODM	4	MARINE * SOLID TOP, 4 ZONES, ECO TOP, 1-SIDE, 1000X900X250H
589873	MCLDACJODM	6	MARINE * SOLID TOP, 4 ZONES, ECO TOP, 2-SIDES, 1000X900X250H
589878	MCLXEAJ1DM	8	MARINE * SOLID TOP UNIT, H3, 4 ZONES, 1-SIDE, 1000X900X700H
589879	MCLXECJ1DM	10	MARINE * SOLID TOP UNIT, H3 ,4 ZONES, 2-SIDES, 1000X900X700H
589880	MCLYEAJ1DM	8	MARINE * SOLID TOP UNIT, H3, 4 ZONES, ECO TOP, 1-SIDE, 1000X900X700H
589881	MCLYECJ1DM	10	MARINE * SOLID TOP UNIT, H3, 4 ZONES, ECO TOP, 2-SIDES, 1000X900X700H

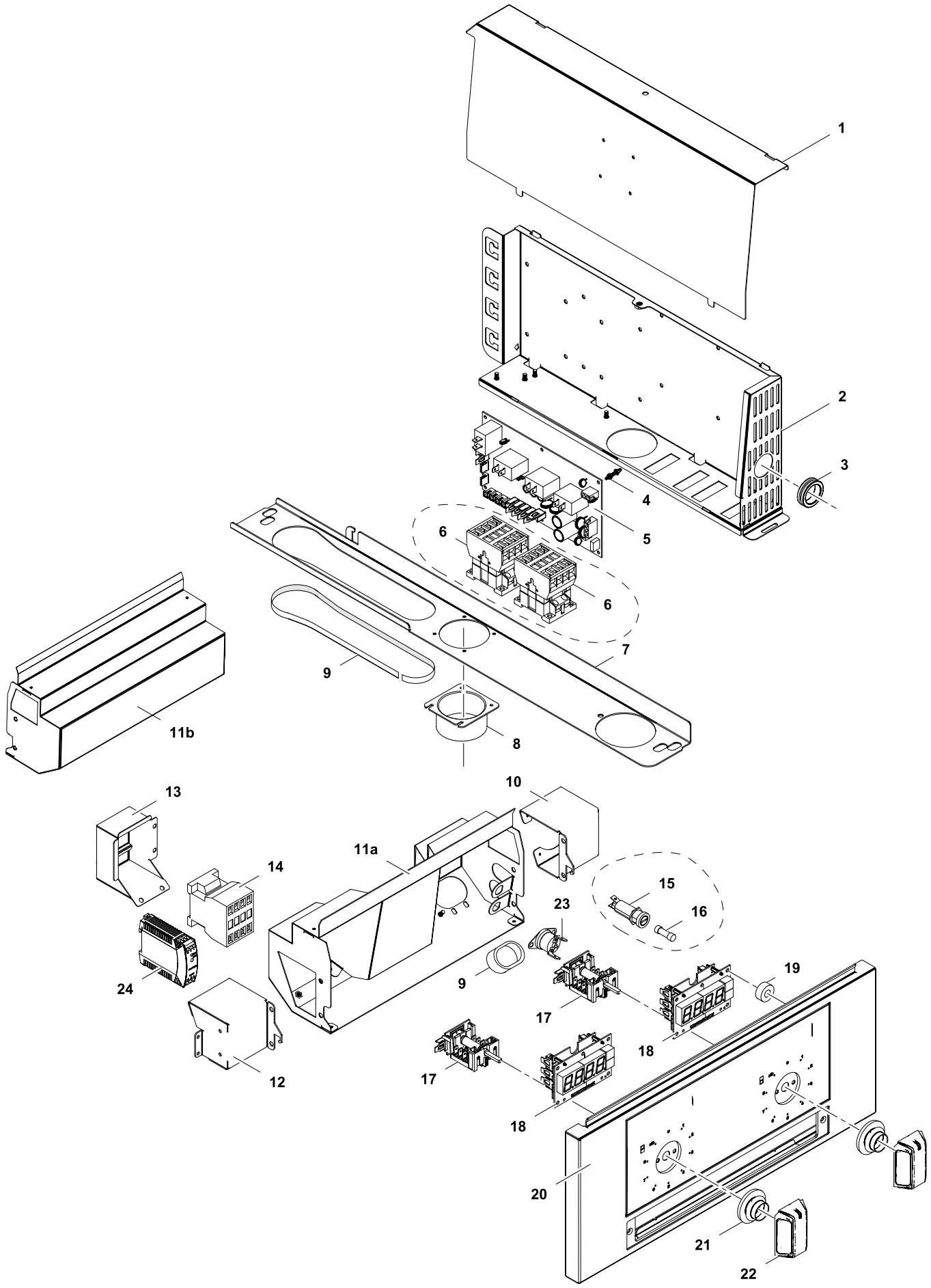

Doc. № 599A2AW00 / 82.8120.03

✱ Components on demand
✱ Teile auf Anfrage

1	Alias	Code	Bezeichnung	Description	Ref.	Valid from Serial N°
1	82.3042	✱	Deckel Elektrobox Sparta	Top cover Sparta box	all 2Zone	
2	82.3041	✱	Elektrobox Sparta	Sparta box	all 2Zone	
3	712 044961.17	0KT854	Kabeltülle Ø25/Ø31/Ø35x10	Cable: sleeve Ø25/Ø31/Ø35x10	all 2Zone	
4	75.5000.05	0C3750	Distanzhalter Kunststoff	Plastic spacer support	all 2Zone	
5	82.7014.KD	0G6221	Mainboard SPARTA	Mainboard SPARTA	all 2Zone	
6	1 115 1757	0G4645	Schütz K3-14x027 + K2-E230	Conductor K3-24x027 + K2-E230	2Zone Marine	
7	82.3040.01	✱	Schiene Spatabox D800	Guide track D800	2Zone /D800	
	82.3040.02	✱	Schiene Spatabox D850	Guide track D850	2Zone /D850	
	82.3040.03	✱	Schiene Spatabox D900	Guide track D900	2Zone /D900	
8	82.7550.01	0G7868	Rohrstutzen gerade	Pipe socket straight	all 2Zone	
9	1 201 2086	0G4872	Kantenschutz	Edge protection	all 2Zone	
10	82.3002	0G7450	Ventilationsbox rechts	Aeration box right	all 2Zone	
11a	82.3037	✱	Electrobox Solid Top	Electronical compartment	all 2Zone	
	82.3056	✱	Electrobox Solid Top (Marine)	Electronical compartment (Marine)	2Zone Marine	
11b	82.3038	✱	Electrobox Rückseite Solid Top 2-seitig	Electronical compartment 2-side	all 2Zone/2-side	
12	82.3001	✱	Ventilationsbox links	Aeration box left	all 2Zone	
13	82.3048	0G7230	Aufsteckblech	Conductor box	all 2Zone/1-side	
14	1 115 1752	006879	Schütz K3-18N10	Conductor K3-18N10	all 2Zone/1-side	
	82.9555	0L0430	Schütz K3-18A10 180	Conductor K3-18A10 180	for USA	
15	87.9204	0CB130	Sicherungshalter Schurter 6.3x32 500V	Fuse holder Schurter 6.3x32 500V	2Zone Marine	
16	82.9171	0TTR73	Sicherung 6.3x32 0.63A 500V	Fuse 6.3x32 0.63A 500V	2Zone Marine	
17	82.9013	0G6242	Schalter off - 9 Stufen + 10k Potent	Switch off - 9 level + 10k potentiometer	all 2Zone	
18	82.7015	0G6246	Eurotas Display	Eurotas Display	D800/D900	
	82.7015	0G7091	Eurotas Display	Eurotas Display	D800/D900	6101...
	72.5938.04	0KI362	Anzeigelampe grün	Indicator light, green	D850	
	72.5938.08	0KI364	Einsteckfassung grün/gelb Ø10mm	Lamp holder, green/yellow, Ø10mm	D850	
19	76.3011.01	0G3093	Distanzhalter 8mm	Spacer 8mm	all 2Zone	
20	82.1027.02	✱	Bedienblende 500 (Schublade)	Control panel 500 (drawer)	a b	
	82.1027.12	✱	Bedienbl. 500 (oh. Schubl.ade)	Control panel 500 (no drawer)	k m u v 3 7	
	82.1049.02	✱	Bedienbl. 500 (Schubl.) INOX	Contr. panel 500 (drawer) INOX	e	
	82.1049.06	✱	Bedienbl. 500 (oh. Schubl.) INOX	Contr. panel 500 (no draw.) INOX	o	
	82.1027.01	✱	Bedienbl. 2-seitig 500 Rückseite	Control panel 2-sides 500 back side	all 2-side	
	82.1027.17	✱	Bedienbl. 2-seitig 500 (oh. Schubl.ade)	Control panel 2-sides 500 (no drawer)	all 2-side/H700/800	
	82.1027.05	✱	Bedienbl. 2-seitig 500 (Schubl.ade)	Control panel 2-sides 500 (drawer)	all 2-side/H250	
21	82.7009	0G6247	Dichtung Drehgriff	Sealing for hande	all 2Zone	
22	82.9124.01	0G6369	Drehgriff mit Adapter 0°x6.0	Handle with adapter 0°x6.0	all 2Zone	
23	82.9062	0G6231	Temperatur Thermostat 50 (Klickson)	Temperature Thermostat 50 (Klickson)	all 2Zone	7161...
24	82.9030	0G6075	DC Stromversorgung 12V	DC Power Supply 12V	all 2Zone	7161...
	82.9001	0G6461	Kabel: Sparta - Display L2200	Cable: Sparta - Display L2200	a c g i k m q s u w y 1	
	82.9002	0G6897	Kabel: Display - Display L290	Cable: Display - Display L290	a c k m u v	
	82.9003	0G6899	Kabel: Potentiometer - Display L200	Cable: Potentiometer - Display L200	a c g i k m q s u w y 1	
	82.9009	0G6906	Kabel: Sparta - Ventilator L2000	Cable: Sparta - Ventilator L2000	a c e g i k m o q s u w y 1	
	82.9137	0G7197	Kabel: Ventilator - Ventilator	Cable: Ventilator - Ventilator	a c e g i k m o q s u w y 1	
	82.9077	0G7185	Kabel: X0 - RL - Heizung 3kW Solidtop	Cable: X0 - RL - Heating 3kW Solidtop	a c e g i k m o q s u w y 1	
	82.9083	0G7193	Kabel: Sparta - N - Schalter - P	Cable: Sparta - N - Switch - P	a c k m u v	
	82.9224.01		Kabel: Schalter - Contactor KS	Cable: Switch - Contactor KS	a c k m u v e o	
	82.9224.02	0G7381	Kabel: Schalter - Contactor KS	Cable: Switch - Contactor KS	g i q s y 1	
	82.9044.02	0G6181	Kabel: Sparta - Potentiometer	Cable: Sparta - Potentiometer	2Z/D850	
	82.9081	0G7191	Kabel: Sparta - N - Schalter P	Cable: Sparta - N - Switch - P	2Z/D850	
	82.9086	0G7279	Kabel: Sparta - N - Schalter P 2-seitig	Cable: Sparta - N - Switch - P 2-sides	g i q s y 1	
	82.9213	0G7007	Kabelbaum Solid Top 2Z, 1-Side Marine	Cabling Solid top 2Z, 1-Side Marine	2Z/1-Side Marine	
	82.9214	0G7008	Kabelbaum Solid Top 2Z, 2-Side Marine	Cabling Solid top 2Z, 2-Side Marine	2Z/2-Side Marine	
	82.9284.01		Kabel: Solidtop - Stromversorgung 12V	Cable: Solidtop - Power Supply 12V	all 2Zone / 1-side	7161...
	82.9284.02		Kabel: Solidtop - Stromversorgung 12V	Cable: Solidtop - Power Supply 12V	all 2Zone / 2-side	7161...

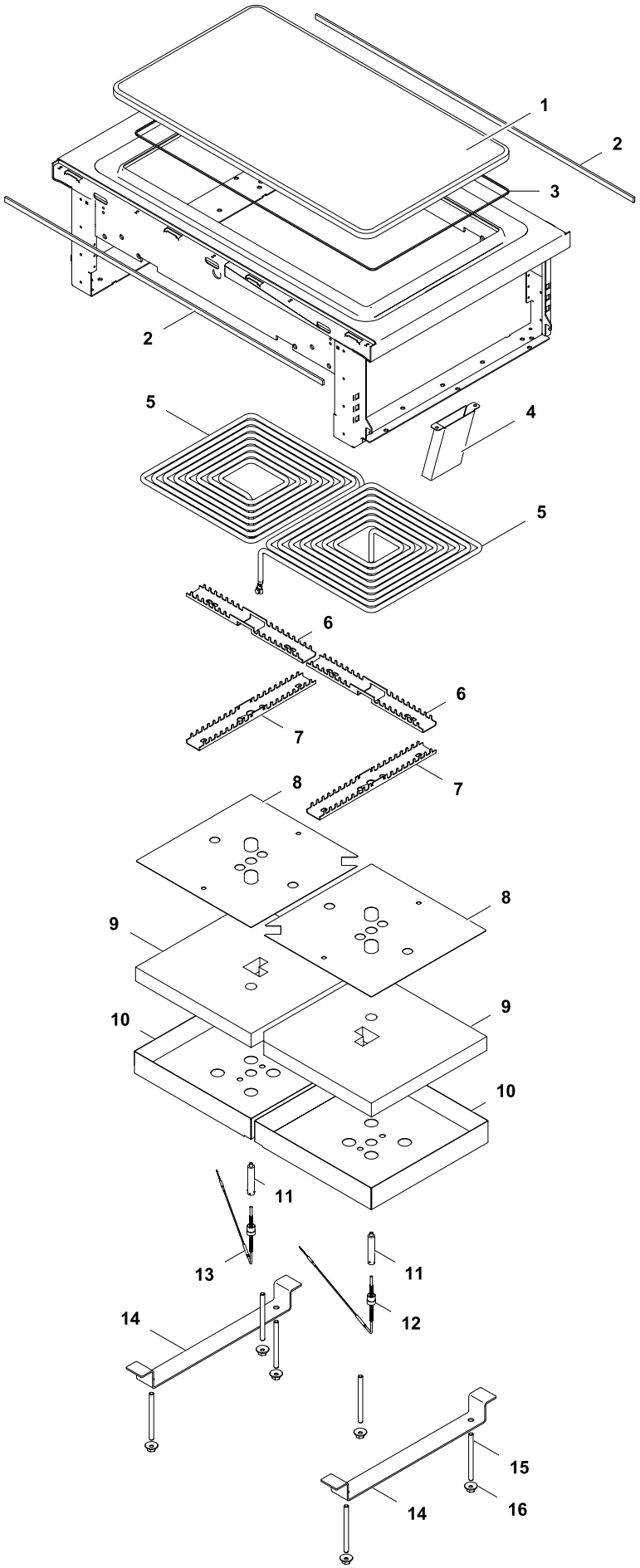

Doc. № 599A2AW00 / 82.8120.03

✱ Components on demand
✱ Teile auf Anfrage

2	Alias	Code	Bezeichnung	Description	Ref.	Valid from Serial N°
1	82.7323.02	0G7289	Kochplatte ECO Top 500x900 14mm	Cooking plate ECO top 500x900 14mm	ECO top 2Z/D900	
	82.7323.03	0G7290	Kochplatte Solid Top 500x900 14mm	Cooking plate Solid top 500x900 14mm	Solid top 2Z/D900	
	82.7321.02	0G7291	Kochplatte ECO Top 500x800/850 14mm	Cooking plate ECO top 500x800/850 14mm	ECO top 2Z/D800/850	until 8341...
	82.7321.03	0G7292	Kochplatte Solid Top 500x800/850 14mm	Cooking plate Solid top 500x800/850 14mm	Solid top 2Z/D800/850	
	82.3122.05	0G8158	Kochplatte ECO Top 500x900 20mm UL	Cooking plate ECO top 500x900 20mm UL	ECO top 2Z/D900 for USA	8351...
	82.3122.06	0G8159	Kochplatte Solid Top 500x900 20mm UL	Cooking plate Solid top 500x900 20mm UL	Solid top 2Z/D900 for USA	8351...
	82.3121.02	0G8149	Kochplatte ECO Top 500x800/850 20mm	Cooking plate ECO top 500x800/850 20mm	ECO top 2Z/D800/850	8351...
	82.3121.05	0G8152	Kochplatte ECO Top 500x800/850 20mm UL	Cooking plate ECO top 500x800/850 20mm UL	ECO top 2Z/D800/850 for USA	8351...
	82.3121.06	0G8153	Kochplatte Solid Top 500x800/850 20mm UL	Cooking plate Solid top 500x800/850 20mm UL	Solid top 2Z/D800/850 for USA	8351...
	82.7600.02	0G8172	Kochplatte CPL ECO Top 500x800/850 20mm	Cooking plate CPL ECO top 500x800/850 20mm	ECO top 2Z/D800/850	8351...
2	82.7464	0C2496	Dichtband (klebend)	Sealing strip	all 2Zone	
3	82.7551	0G7755	Dichtband Platte	Sealing strip plate	all 2Zone	
4	82.2684	0G7222	Ablauf Solid Top	Drain Solid Top	all 2Zone/H250	
5	82.7257.02	0G6251	Heizelement 3kW 230V	Heating element 3kW 230V	2Zone Standard	
	82.7257.07	0G6952	Heizelement 3kW 440V (Marine)	Heating element 3kW 440V (marine)	2Zone Marine	
	82.7257.01	0G8078	Heizelement 3kW 400V (Marine)	Heating element 3kW 400V (marine)	2Zone Marine	
	82.7257.03	0G8133	Heizelement 2.8kW 208V	Heating element 2.8kW 208V	for USA	
6	82.2232	0G7203	Heizungshalter längs	Heating element support lengthwise	all 2Zone	
7	82.2231	0G7205	Heizungshalter quer	Heating element support crosswise	all 2Zone	
8	82.2233	0G7207	Strahlungsblech	Radiation sheet	all 2Zone	
9	82.7307.01	0G7209	Isolation Heizelement 3kW	Insulation heating element 3kW	all 2Zone	
10	82.2234	0G7211	Verschalung	Cover sheet	all 2Zone	
11	75.9013.04	0KE127	Fühlerschutz	Sensor protection	all 2Zone	
12	87.9046	0G5934	TC Bodenfühler links (grün)	TC bottom sensor left (green)	all 2Zone	
13	87.9045	0G5935	TC Bodenfühler rechts (blau)	TC bottom sensor right (blue)	all 2Zone	
14	82.1121	0G7293	Befestigungsbügel	Support	all 2Zone	until 7511...
15	72.0343.01	0KD994	Gewindestift M8x100	Set screw M8X100	all 2Zone	until 7511...
16	712 044120.08	0G7215	Keps Mutter M8	Keps nut M8	all 2Zone	until 7511...

3	Elektrobox 4 Zonen	Electrical compartment 4 zones

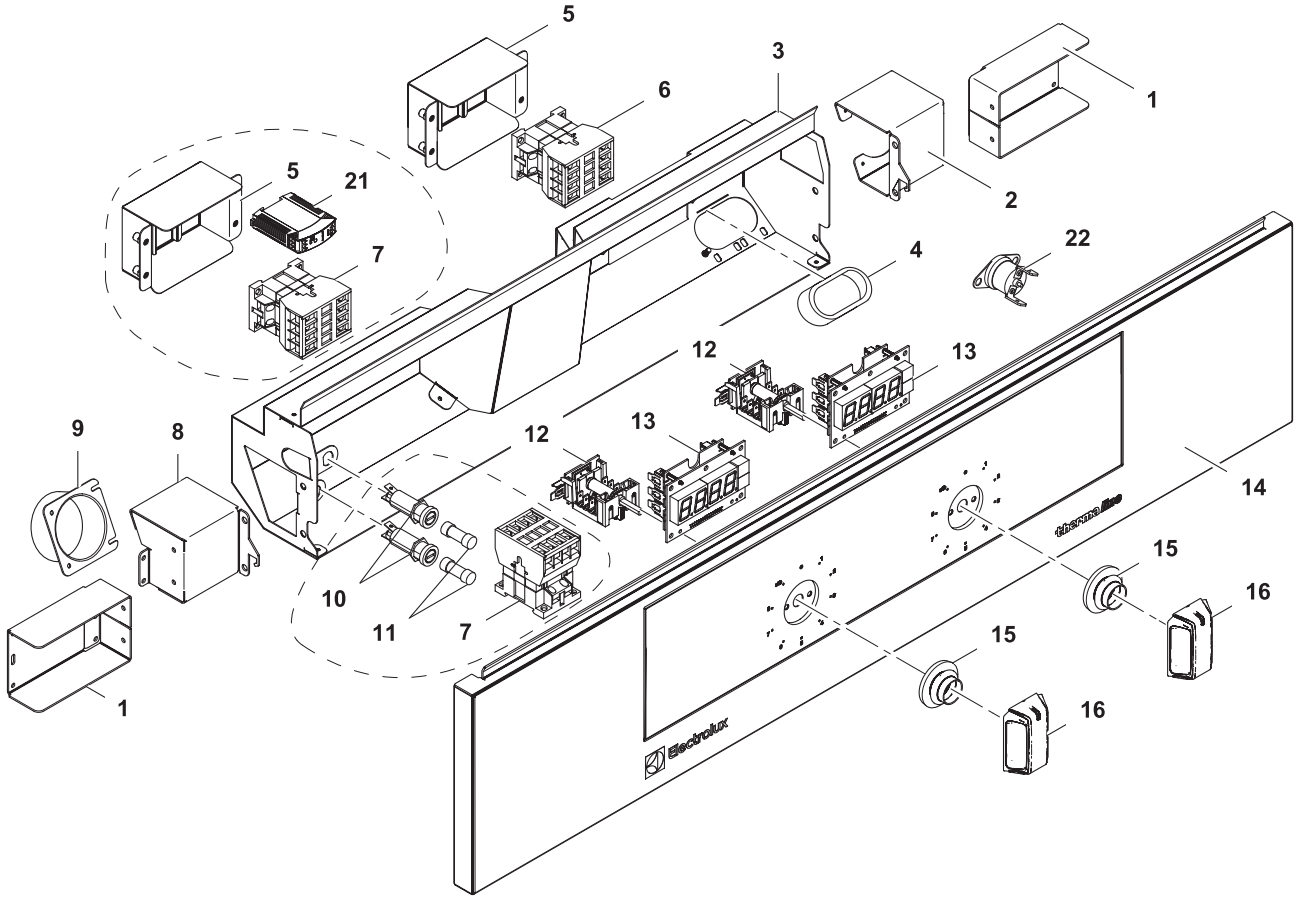

3	Alias	Code	Bezeichnung	Description	Ref.	Valid from Serial N°
1	82.3004.01	0G7448	Halterung Ventilationsbox L=100	Ventilation box support	all types	
2	82.3002	0G7450	Standardventilationsbox rechts	Ventilation box right	all types	
3	82.3034	✱	Elektrobox 4 Zonen	Electrical compartment 4 zones	all types	
	83.9208	0G8193	Elektrobox UL	Electrical compartment UL	all types for USA	
4	1 201 2086	0G4872	Kantenschutz	Edge protection	all types	
5	82.3045	0G7012	Aufsteckblech	Conductor box	all types	
6	82.9228	0C2247	Schütz K2-30A00-40	Conductor K2-30A00-40	all types	
	82.9262	0C5051	Schütz K3-32A00 180 USA	Conductor K3-32A00 180 USA	all types for USA	
7	1 115 1757	0G4645	Schütz K3-14x027	Conductor K3-14x027	all types	
	82.9262	0C5051	Schütz K3-32A00 180 USA	Conductor K3-32A00 180 USA	all types for USA	
8	82.3001	✱	Standardventilationsbox links	Ventilation box left	all types	
9	82.7550.01	0G7868	Rohrstutzen gerade	Pipe socket gerade	all types	
10	87.9204	0CB130	Sicherungshalter Schurter 6.3x32 500V	Fuse holder Schurter 6.3x32 500V	Marine	
11	82.9171	0TTR73	Sicherung 6.3x32 0.63A 500V	Fuse 6.3x32 0.63A 500V	Marine	
12	82.9013	0G6242	Schalter off - 9 Stufen + 10k Potent	Switch off - 9 level + 10k potentiometer	all types	
13	82.7015	0G6246	Eurotas Display	Eurotas Display	D800/900	
	82.7015	0G7091	Eurotas Display	Eurotas Display	D800/D900	6101...
	72.5938.04	0KI362	Anzeigelampe grün	Indicator light, green	D850	
	72.5938.08	0KI364	Einsteckfassung grün/gelb Ø10mm	Lamp holder, green/yellow, Ø10mm	D850	
	72.5938.10	0G8192	Glimmlampe grün UL	Indicator light green UL	D850 for USA	

Doc. № 599A2AW00 / 82.8120.03

✱ Components on demand
✱ Teile auf Anfrage

3	Alias	Code	Bezeichnung	Description	Ref.	Valid from Serial N°
14	82.1027.03	✱	Bedienblende 800 2S (Schublade)	Control panel 800 2S (drawer)		
	82.1027.09	✱	Bedienblende 800 2S	Control panel 800 2S		
	82.1027.04	✱	Bedienblende 800 1S (Schublade)	Control panel 800 1S (drawer)		
	82.1027.15	✱	Bedienblende 800 1S	Control panel 800 1S		
	82.1049.04	✱	Bedienb. 800 1S INOX (Schublade)	Control panel 800 1S INOX (drawer)		
	82.1049.07	✱	Bedienblende 800 1S INOX	Control panel 800 1S INOX		
	82.1027.11	✱	Bedienblende 1000 2S (Schublade)	Control panel 1000 2S (drawer)		
	82.1027.06	✱	Bedienblende 1000 2S	Control panel 1000 2S		
	82.1027.07	✱	Bedienblende 1000 1S (Schublade)	Control panel 1000 1S (drawer)		
	82.1027.16	✱	Bedienblende 1000 1S	Control panel 1000 1S		
	83.5130.01	0G8195	Bedienb. 1000 1S INOX (Schublade)	Control panel 1000 1S INOX (drawer)	for USA	
15	82.7009	0G6247	Dichtung Drehgriff	Sealing for hande		
16	82.9124.01	0G6369	Drehgriff mit Adapter 0°x6.0	Handle with adapter 0°x6.0		
17	82.1027.09	✱	Bedienblende 800 2S	Control panel 800 2S		
	82.1027.06	✱	Bedienblende 1000 2S	Control panel 1000 2S		
	82.1000.05	✱	Blende 800	Panel 800		
	82.1000.07	0G7445	Blende 1000	Panel 1000		
18	76.3011.01	0G3093	Distanzhalter 8mm	Spacer 8mm	D800/900	
19	712 044120.04	0G4918	Keps-Mutter M4	Keps nut M4	all types	
20	82.3036	✱	Elektrobox Rückseite	Electrical compartment backside	all 2-Sides	7161...
21	82.9030	0G6075	DC Stromversorgung 12V	DC Power Supply 12V	all 2-Sides	7161...
22	82.9062	0G6231	Temperatur Thermostat 50 (Klickson)	Temperature Thermostat 50 (Klickson)	all 2-Sides	
	82.9001	0G6461	Kabel: Sparta - Display L2200	Cable: Sparta - Display L2200	D800/D900 Standard	
	82.9002	0G6897	Kabel: Display - Display L290	Cable: Display - Display L290	D800/D900 Standard	
	82.9003	0G6899	Kabel: Potentiometer - Display L200	Cable: Potentiometer - Display L200	D800/D900 Standard	
	82.9009	0G6906	Kabel: Sparta - Ventilator L2000	Cable: Sparta - Ventilator L2000	all Standard	
	82.9107	0G7184	Kabel: Sparta - Sparta Kommunikation	Cable: Sparta - Sparta communication	all Standard	
	82.9077	0G7185	Kabel: X0 - RL - Heizungen 12 /3kW	Cable: X0 - RL - heating el. 12 /3kW	D800/850	
	82.9078	0G7186	Kabel: X0 - RL - Heizungen 34 /3kW	Cable: X0 - RL - heating el. 34 /3kW	D800/850	
	82.9079	0G7187	Kabel: X0 - RL - Heizungen 12 /4kW	Cable: X0 - RL - heating el. 12 /4kW	D900	
	28.9080	0G7188	Kabel: X0 - RL - Heizungen 34 /4kW	Cable: X0 - RL - heating el. 34 /4kW	D900	
	82.9125	0G7189	Kabel: Sparta - N - Schalter - P 12	Cable: Sparta - N - switch - P 12	D800	
	82.9126	0G7190	Kabel: Sparta - N - Schalter - P 34	Cable: Sparta - N - switch - P 34	D800	
	82.9081	0G7191	Kabel: Sparta - N - Schalter - P 12 XD	Cable: Sparta - N - switch - P 12 XD	D850	
	82.9082	0G7192	Kabel: Sparta - N - Schalter - P 34 XD	Cable: Sparta - N - switch - P 34 XD	D850	
	82.9083	0G7193	Kabel: Sparta - N - Schalter - P 12	Cable: Sparta - N - switch - P 12	D900	
	82.9084	0G7194	Kabel: Sparta - N - Schalter - P 34	Cable: Sparta - N - switch - P 34	D900	
	82.9022.03	0G7195	Kabel: Schalter S2/3 - Schalter S4 kurz	Cable: switch S2/3 - switch S4 short	all Standard	
	82.9224.03	0G7383	Kabel Schalter - Schütz KS	Cable switch - Sconductor KS	all Standard	
	82.9044.02	0G6181	Kabel: Sparta - Potentiometer L200	Cable: Sparta - potentiometer L200	D850	
	82.9137	0G7197	Kabel: Ventilator - Ventilator	Cable: Ventilator - Ventilator	all Standard 2-Sides	
	82.9198	0G6946	Kabelbaum Solid Top 4Z/1S Marine	Wiring harness Solid Top 4Z/1S Marine	Marine 1-Side	
	82.9215	0G6947	Kabelbaum Solid Top 4Z/2S Marine	Wiring harness Top 4Z/2S Marine	Marine 2-Sides	7161...
	82.9284.02		Kabel: Solidtop - Stromversorgung 12V	Cable: Solidtop - Power Supply 12V	all 2-Sides	
	82.9253	0G8183	Kabel: UL X0-RL - Heizung 4Z 4kW	Cable: UL X0-RL - Heating 4Z 4kW	D900 for USA	
	82.9254	0G8184	Kabel: UL Sparta -L- Schalter - P12	Cable: UL Sparta -L- switch - P12	D900 for USA	
	82.9255	0G8185	Kabel: UL Sparta -L- Schalter - P34	Cable: UL Sparta -L- switch - P34	D900 for USA	
	82.9548	0G8186	Kabel: UL Sparta -L- Schalter - P12 XD	Cable: UL Sparta -L- switch - P12 XD	D850 for USA	
	82.9549	0G8187	Kabel: UL Sparta -L- Schalter - P34 XD	Cable: UL Sparta -L- switch - P34 XD	D850 for USA	
	82.9530	0G8188	Kabel: UL Display - Display L290	Cable: UL Display - Display L290	D800/900 for USA	
	82.9531	0G8189	Kabel: UL Potentiometer-Display L200	Cable: UL Potentiometer-Display L200	D800/900 for USA	
	82.9528	0G8135	Kabel: UL Sparta - Ventilator L2000	Cable: UL Sparta - Ventilator L2000	for all USA	
	82.9546.02	0G8258	Kabel: UL Sparta - Poti L2000	Cable: UL Sparta - poti L2000	D850 for USA	
	82.9533	0G8190	Kabel: UL Ventilator - Ventilator	Cable: UL Ventilator - Ventilator	for all USA	
	82.9559	0G8191	Kabel: UL Trafo Ventilator L2000	Cable: UL Trafo Ventilator L2000	for all USA	

✱ Components on demand
✱ Teile auf Anfrage

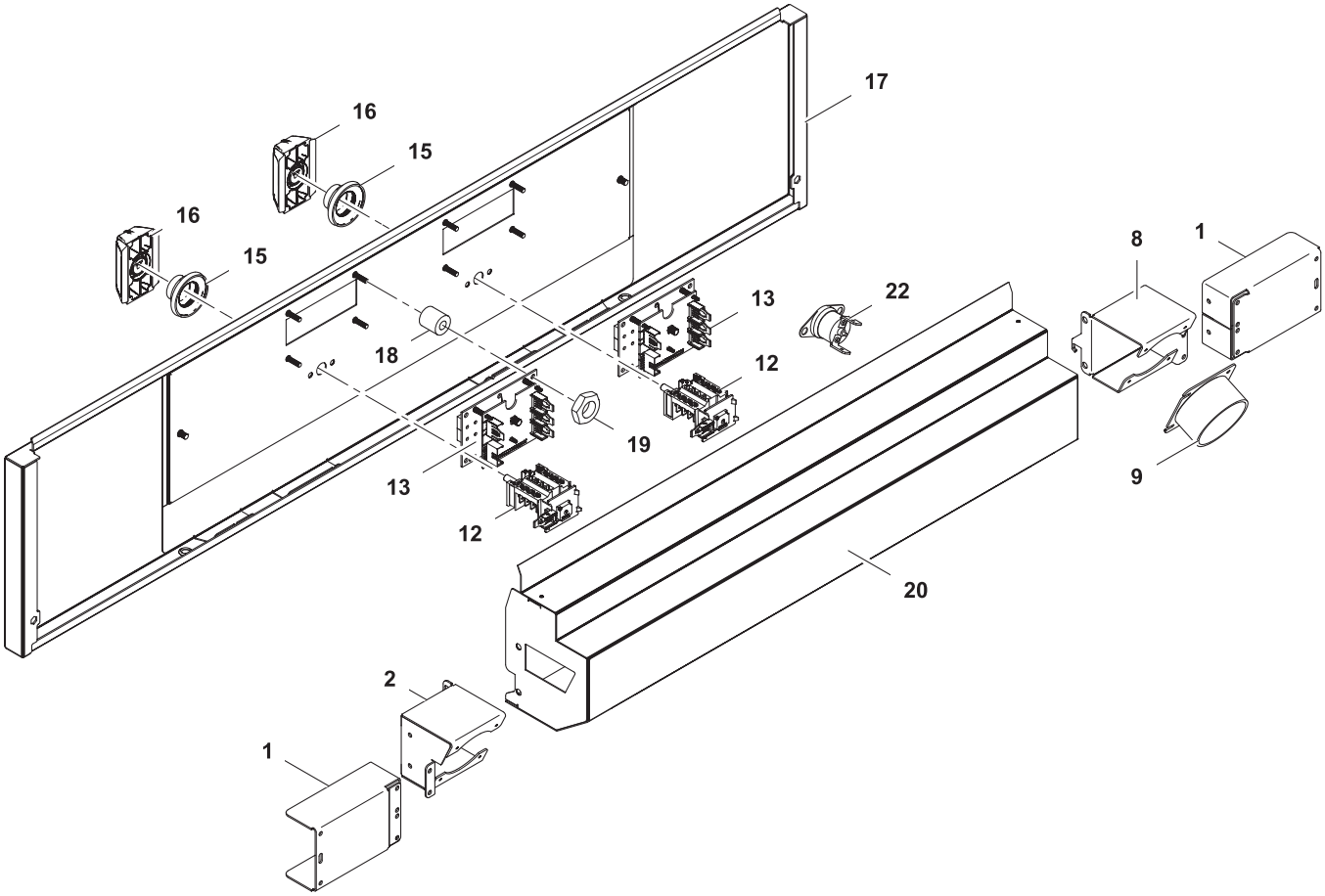

Doc. № 599A2AW00 / 82.8120.03

✱ Components on demand
✱ Teile auf Anfrage

3	Alias	Code	Bezeichnung	Description	Ref.	Valid from Serial N°
1	82.3004.01	0G7448	Halterung Ventilationsbox L=100	Ventilation box support	all types	
2	82.3002	0G7450	Standardventilationsbox rechts	Ventilation box right	all types	
8	82.3001	✱	Standardventilationsbox links	Ventilation box left	all types	
9	82.7550.01	0G7868	Rohrstutzen gerade	Pipe socket gerade	all types	
12	82.9013	0G6242	Schalter off - 9 Stufen + 10k Potent.	Switch off - 9 level + 10k potentiometer	all types	
13	82.7015	0G6246	Eurotas Display	Eurotas Display	D800/900	
	82.7015	0G7091	Eurotas Display	Eurotas Display	D800/D900	6101...
	72.5938.04	0KI362	Anzeigelampe grün	Indicator light, green	D850	
	72.5938.08	0KI364	Einsteckfassung grün/gelb Ø10mm	Lamp holder, green/yellow, Ø10mm	D850	
	72.5938.10	0G8192	Glimmlampe grün UL	Indicator light green UL	D850 for USA	
15	82.7009	0G6247	Dichtung Drehgriff	Sealing for hande		
16	82.9124.01	0G6369	Drehgriff mit Adapter 0°x6.0	Handle with adapter 0°x6.0		
17	82.1027.09	✱	Bedienblende 800 2S	Control panel 800 2S		
	82.1027.06	✱	Bedienblende 1000 2S	Control panel 1000 2S		
	82.1000.05	✱	Blende 800	Panel 800		
	82.1000.07	0G7445	Blende 1000	Panel 1000		
18	76.3011.01	0G3093	Distanzhalter 8mm	Spacer 8mm	D800/900	
19	712 044120.04	0G4918	Keps-Mutter M4	Keps nut M4	all types	
20	82.3036	✱	Elektrobox Rückseite	Electrical compartment backside	all 2-Sides	
22	82.9062	0G6231	Temperatur Thermostat 50 (Klickson)	Temperature Thermostat 50 (Klickson)	all 2-Sides	7161...
	82.9001	0G6461	Kabel: Sparta - Display L2200	Cable: Sparta - Display L2200	D800/D900 Standard	
	82.9002	0G6897	Kabel: Display - Display L290	Cable: Display - Display L290	D800/D900 Standard	
	82.9003	0G6899	Kabel: Potentiometer - Display L200	Cable: Potentiometer - Display L200	D800/D900 Standard	
	82.9009	0G6906	Kabel: Sparta - Ventilator L2000	Cable: Sparta - Ventilator L2000	all Standard	
	82.9107	0G7184	Kabel: Sparta - Sparta Kommunikation	Cable: Sparta - Sparta communication	all Standard	
	82.9077	0G7185	Kabel: X0 - RL - Heizungen 12 /3kW	Cable: X0 - RL - heating el. 12 /3kW	D800/850	
	82.9078	0G7186	Kabel: X0 - RL - Heizungen 34 /3kW	Cable: X0 - RL - heating el. 34 /3kW	D800/850	
	82.9079	0G7187	Kabel: X0 - RL - Heizungen 12 /4kW	Cable: X0 - RL - heating el. 12 /4kW	D900	
	28.9080	0G7188	Kabel: X0 - RL - Heizungen 34 /4kW	Cable: X0 - RL - heating el. 34 /4kW	D900	
	82.9125	0G7189	Kabel: Sparta - N - Schalter - P 12	Cable: Sparta - N - switch - P 12	D800	
	82.9126	0G7190	Kabel: Sparta - N - Schalter - P 34	Cable: Sparta - N - switch - P 34	D800	
	82.9081	0G7191	Kabel: Sparta - N - Schalter - P 12 XD	Cable: Sparta - N - switch - P 12 XD	D850	
	82.9082	0G7192	Kabel: Sparta - N - Schalter - P 34 XD	Cable: Sparta - N - switch - P 34 XD	D850	
	82.9083	0G7193	Kabel: Sparta - N - Schalter - P 12	Cable: Sparta - N - switch - P 12	D900	
	82.9084	0G7194	Kabel: Sparta - N - Schalter - P 34	Cable: Sparta - N - switch - P 34	D900	
	82.9022.03	0G7195	Kabel: Schalter S2/3 - Schalter S4 kurz	Cable: switch S2/3 - switch S4 short	all Standard	
	82.9224.03	0G7383	Kabel Schalter - Schütz KS	Cable switch - Sconductor KS	all Standard	
	82.9044.02	0G6181	Kabel: Sparta - Potentiometer L200	Cable: Sparta - potentiometer L200	D850	
	82.9137	0G7197	Kabel: Ventilator - Ventilator	Cable: Ventilator - Ventilator	all Standard 2-Sides	
	82.9198	0G6946	Kabelbaum Solid Top 4Z/1S Marine	Wiring harness Solid Top 4Z/1S Marine	Marine 1-Side	
	82.9215	0G6947	Kabelbaum Solid Top 4Z/2S Marine	Wiring harness Top 4Z/2S Marine	Marine 2-Sides	
	82.9284.02		Kabel: Solidtop - Stromversorgung 12V	Cable: Solidtop - Power Supply 12V	all 2-Sides	7161...
	82.9253	0G8183	Kabel: UL X0-RL - Heizung 4Z 4kW	Cable: UL X0-RL - Heating 4Z 4kW	4Zones for USA	
	82.9254	0G8184	Kabel: UL Sparta -L- Schalter - P12	Cable: UL Sparta -L- switch - P12	D900 for USA	
	82.9255	0G8185	Kabel: UL Sparta -L- Schalter - P34	Cable: UL Sparta -L- switch - P34	D900 for USA	
	82.9548	0G8186	Kabel: UL Sparta -L- Schalter - P12 XD	Cable: UL Sparta -L- switch - P12 XD	D850 for USA	
	82.9549	0G8187	Kabel: UL Sparta -L- Schalter - P34 XD	Cable: UL Sparta -L- switch - P34 XD	D850 for USA	
	82.9530	0G8188	Kabel: UL Display - Display L290	Cable: UL Display - Display L290	D800/900 for USA	
	82.9531	0G8189	Kabel: UL Potentiometer-Display L200	Cable: UL Potentiometer-Display L200	D800/900 for USA	
	82.9528	0G8135	Kabel: UL Sparta - Ventilator L2000	Cable: UL Sparta - Ventilator L2000	for USA	
	82.9546.02	0G8258	Kabel: UL Sparta - Poti L2000	Cable: UL Sparta - poti L2000	D850 for USA	
	82.9533	0G8190	Kabel: UL Ventilator - Ventilator	Cable: UL Ventilator - Ventilator	for USA	
	82.9559	0G8191	Kabel: UL Trafo - Ventilator L2000	Cable: UL Trafo - Ventilator L2000	for USA	

✱ Components on demand
✱ Teile auf Anfrage

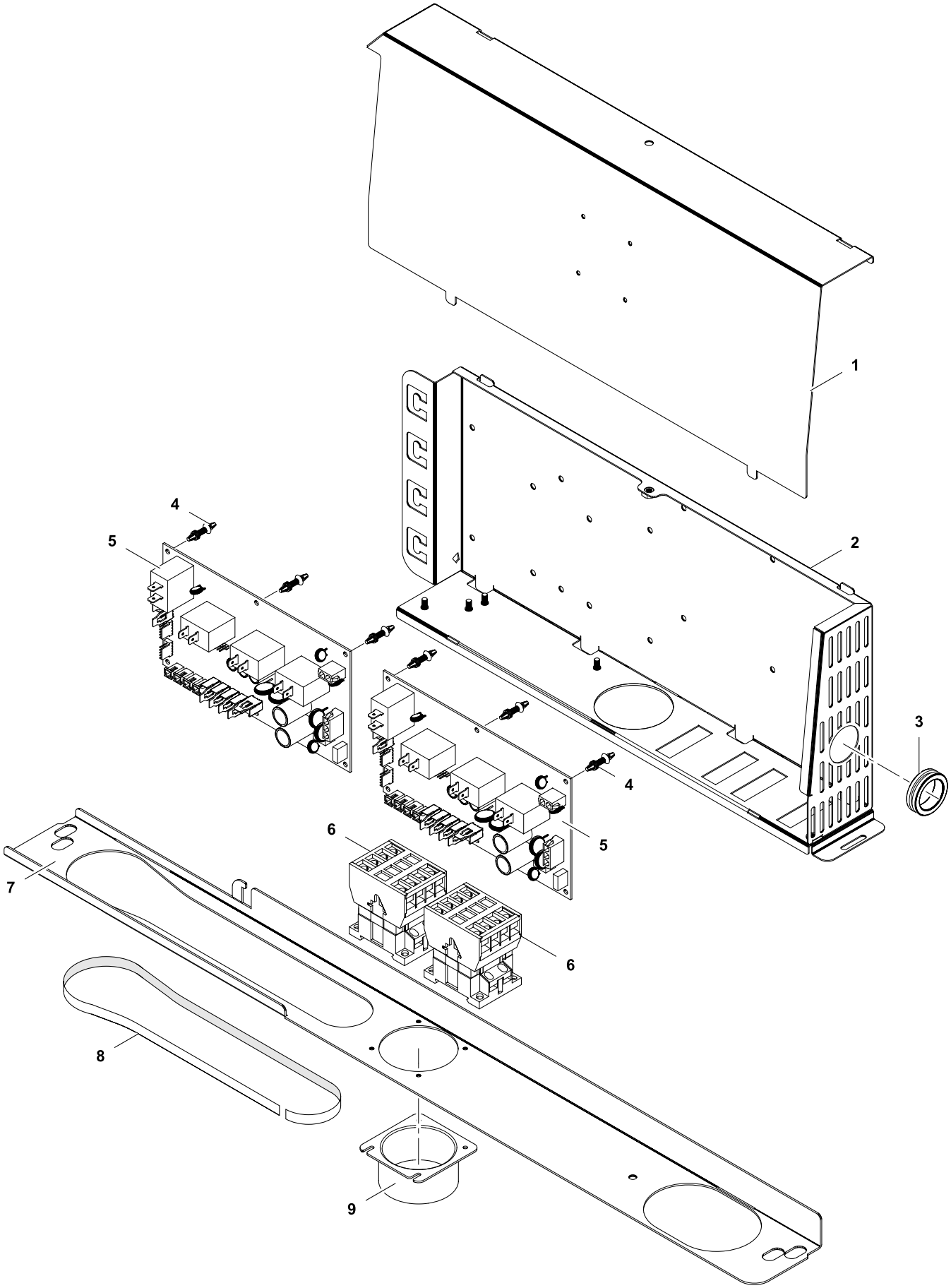

Doc. № 599A2AW00 / 82.8120.03

✱ Components on demand
✱ Teile auf Anfrage

4	Alias	Code	Bezeichnung	Description	Ref.	Valid from Serial N°
1	82.3042	✱	Deckel Elektrobox Sparta	Top cover Sparta box	all 4Zone	
2	82.3041	✱	Elektrobox Sparta	Sparta box	all 4Zone	
	83.9516	0G8136	Elektrobox Sparta UL	Sparta box UL	for USA	
3	712 044961.17	0KT854	Kabeltülle Ø25/Ø31/Ø35x10	Cable: sleeve Ø25/Ø31/Ø35x10	all 4Zone	
4	75.5000.05	0C3750	Distanzhalter Kunststoff	Plastic spacer support	all 4Zone	
5	82.7014.KD	0G6221	Mainboard SPARTA	Mainboard SPARTA	all 4Zone	
6	1 115 1757	0G4645	Schütz K3-14x027 + K2-E230	Conductor K3-24x027 + K2-E230	4Zone/D900	
	82.9555	0L0430	Schütz K3-18A10 180	Conductor K3-18A10 180	for USA	
7	82.3040.01	✱	Schiene Spatabox D800	Guide track D800	all 4Zone	
	82.3040.02	✱	Schiene Spatabox D850	Guide track D850	all 4Zone	
	82.3040.03	✱	Schiene Spatabox D900	Guide track D900	all 4Zone	
8	1 201 2086	0G4872	Kantenschutz	Edge protection	all 4Zone	
9	82.7550.01	0G7868	Rohrstutzen gerade	Pipe socket gerade	all 4Zone	

✱ Components on demand
✱ Teile auf Anfrage

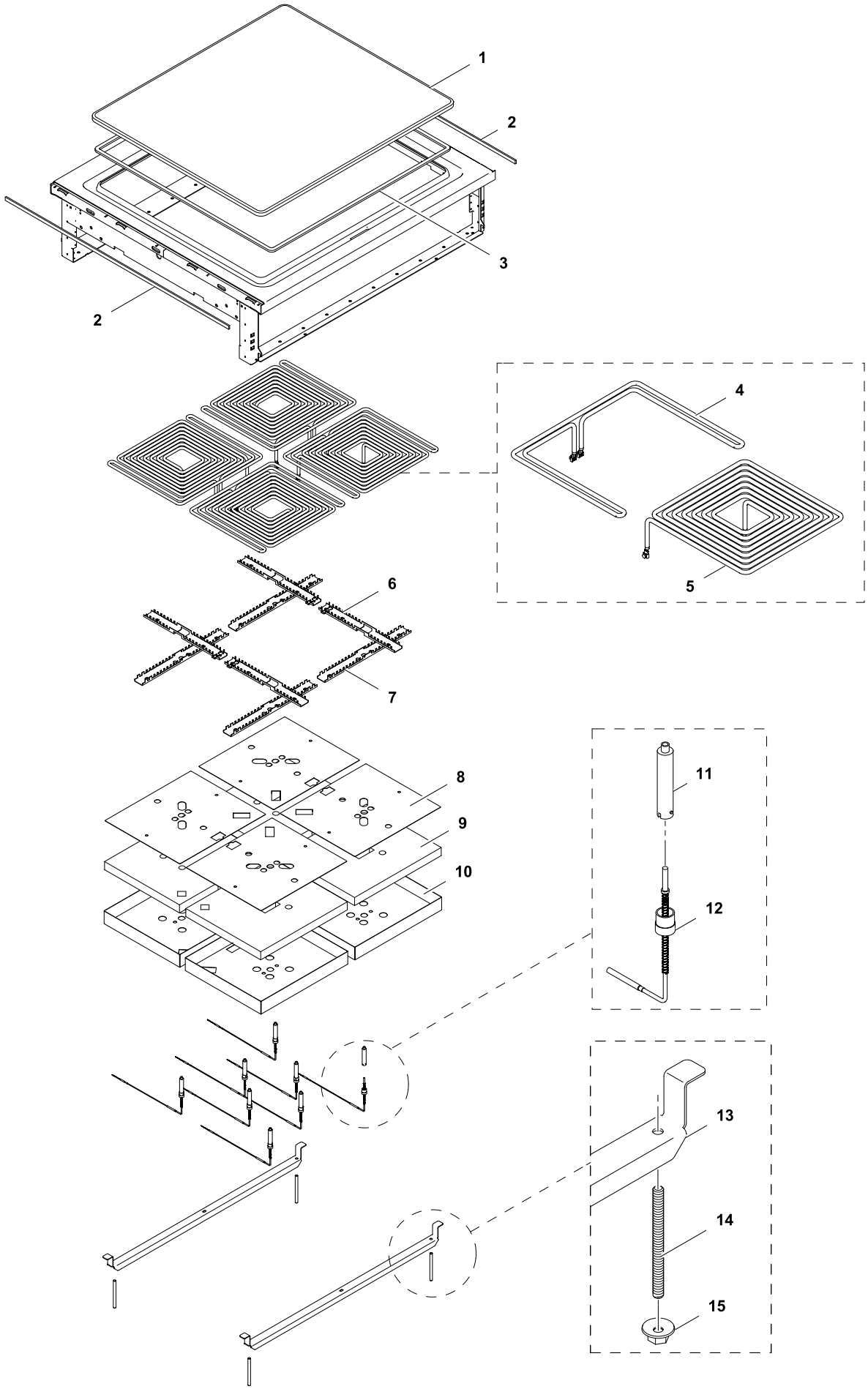

Doc. № 599A2AW00 / 82.8120.03

✱ Components on demand
✱ Teile auf Anfrage

5	Alias	Code	Bezeichnung	Description	Ref.	Valid from Serial N°
1	82.7322.02	0G7200	Kochplatte ECO Top 800x800/850 14mm	Cooking plate ECO top 800x800/850 14mm	ECO top 4Z/D800/850	until 8341...
	82.7322.03	0G7201	Kochplatte Solid Top 800x800/850 14mm	Cooking plate Solid top 800x800/850 14mm	Solid top 4Z/D800/850	until 8341...
	82.7324.02	0G7202	Kochplatte ECO Top 1000x900 14mm	Cooking plate ECO top 1000x900 14mm	ECO top 4Z/D900	until 8341...
	82.7324.03	0G6930	Kochplatte Solid Top 1000x900 14mm	Cooking plate Solid top 1000x900 14mm	Solid top 4Z/D900	until 8341...
	82.3123.02	0G8161	Kochplatte ECO Top 800x800/850 20mm	Cooking plate ECO top 800x800/850 20mm	ECO top 4Z/D800/850	8351...
	82.3123.03	0G8162	Kochplatte Solid Top 800x800/850 20mm	Cooking plate Solid top 800x800/850 20mm	Solid top 4Z/D800/850	8351...
	82.3123.05	0G8131	Kochplatte ECO Top 800x800/850 20mm UL	Cooking plate ECO top 800x800/850 20mm UL	ECO top 4Z/D800/850 for USA	8351...
	82.3123.06	0G8164	Kochplatte Solid Top 800x800/850 20mm UL	Cooking plate Solid top 800x800/850 20mm UL	Solid top 4Z/D800/850 for USA	8351...
	82.3124.02	0G8166	Kochplatte ECO Top 1000x900 20mm	Cooking plate ECO top 1000x900 20mm	ECO top 4Z/D900	8351...
	82.3124.03	0G8167	Kochplatte Solid Top 1000x900 20mm	Cooking plate Solid top 1000x900 20mm	Solid top 4Z/D900	8351...
	82.3124.05	0G8169	Kochplatte ECO Top 1000x900 20mm UL	Cooking plate ECO top 1000x900 20mm UL	ECO top 4Z/D900 for USA	8351...
	82.3124.06	0G8170	Kochplatte Solid Top 1000x900 20mm UL	Cooking plate Solid top 1000x900 20mm UL	Solid top 4Z/D900 for USA	8351...
	82.7589.02	0G8178	Kochplatte KPL ECO Top 800x800/850 20mm	Cooking plate CPL ECO top 800x800/850 20mm	ECO top 4Z/D800/850	8351...
	82.7589.03	0G8179	Kochplatte KPL Solid Top 800x800/850 20mm	Cooking plate CPL Solid top 800x800/850 20mm	Solid top 4Z/D800/850	8351...
	82.7584.02	0G8052	Kochplatte KPL ECO Top 1000X900 20mm	Cooking plate CPL ECO top 1000X900 20mm	ECO top 4Z/D900	8351...
	82.7584.03	0G8051	Kochplatte KPL Solid Top 1000x900 20mm	Cooking plate CPL Solid Top 1000x900 20mm	Solid top 4Z/D900	8351...
2	82.7464	0C2496	Dichtband (klebend)	Sealing strip	all 4 Zone	
3	82.7551	0G7755	Dichtband Platte	Sealing strip plate	all 4 Zone	
4	82.7166.02	0G6252	Heizelement 1kW 230V	Heating element 1kW 230V	Standard 4Z/D900	
	82.7166.07	0G6951	Heizelement 1kW 440V (Marine)	Heating element 1kW 440V (marine)	Marine 4Z/D900	
	82.7166.01	0G8077	Heizelement 1kW 400V (Marine)	Heating element 1kW 400V (marine)	Marine 4Z/D900	
	82.7166.03	0G8263	Heizelement 1kW 208V UL	Heating element 1kW 208V UL	for USA	
5	82.7257.02	0G6251	Heizelement 3kW 230V	Heating element 3kW 230V	Standard 4Z/D900	
	82.7257.07	0G6952	Heizelement 3kW 440V (Marine)	Heating element 3kW 440V (marine)	Marine 4Z/D900	
	82.7257.01	0G8078	Heizelement 3kW 400V (Marine)	Heating element 3kW 400V (marine)	Marine 4Z/D900	
	82.7257.03	0G8133	Heizelement 2.8kW 208V UL	Heating element 2.5kW 208V UL	for USA	
6	82.2232	0G7203	Heizungshalter längs 800	Heating element support lengthwise	4Zone, D800/850	
	82.2188	0G7204	Heizungshalter längs 1000	Heating element support lengthwise	4Zone, D900	
7	82.2231	0G7205	Heizungshalter quer 800	Heating element support crosswise	4Zone, D800/850	
	82.2187	0G7206	Heizungshalter quer 1000	Heating element support crosswise	4Zone, D900	
8	82.2233	0G7207	Strahlungsblech 800	Radiation sheet 800	4Zone, D800/850	
	82.2189	0G7208	Strahlungsblech 1000	Radiation sheet 1000	4Zone, D900	
9	82.7307.01	0G7209	Isolation Heizelement 3kW	Insulation heating element 3kW	4Zone, D800/850	
	82.7307.02	0G7210	Isolation Heizelement 4kW	Insulation heating element 4kW	4Zone, D900	
10	82.2234	0G7211	Verschalung 800	Cover sheet 800	4Zone, D800/850	
	82.2190	0G7212	Verschalung 1000	Cover sheet 1000	4Zone, D900	
11	75.9013.04	0KE127	Fühlerschutz	Sensor protection	all 4 Zone	
12	87.9045	0G5935	TC Bodenfühler rechts (blau)	TC bottom sensor right (blue)	all 4 Zone	
13	82.1127.01	0G7213	Befestigungsbügel 800	Support	4Zone, D800/850	
	82.1127.02	0G7214	Befestigungsbügel 1000	Support	4Zone, D900	
14	72.0343.01	0KD994	Gewindestift M8x100	Set screw M8X100	all 4 Zone	
15	712 044120.08	0G7215	Keps Mutter M8	Keps nut M8	all 4 Zone	

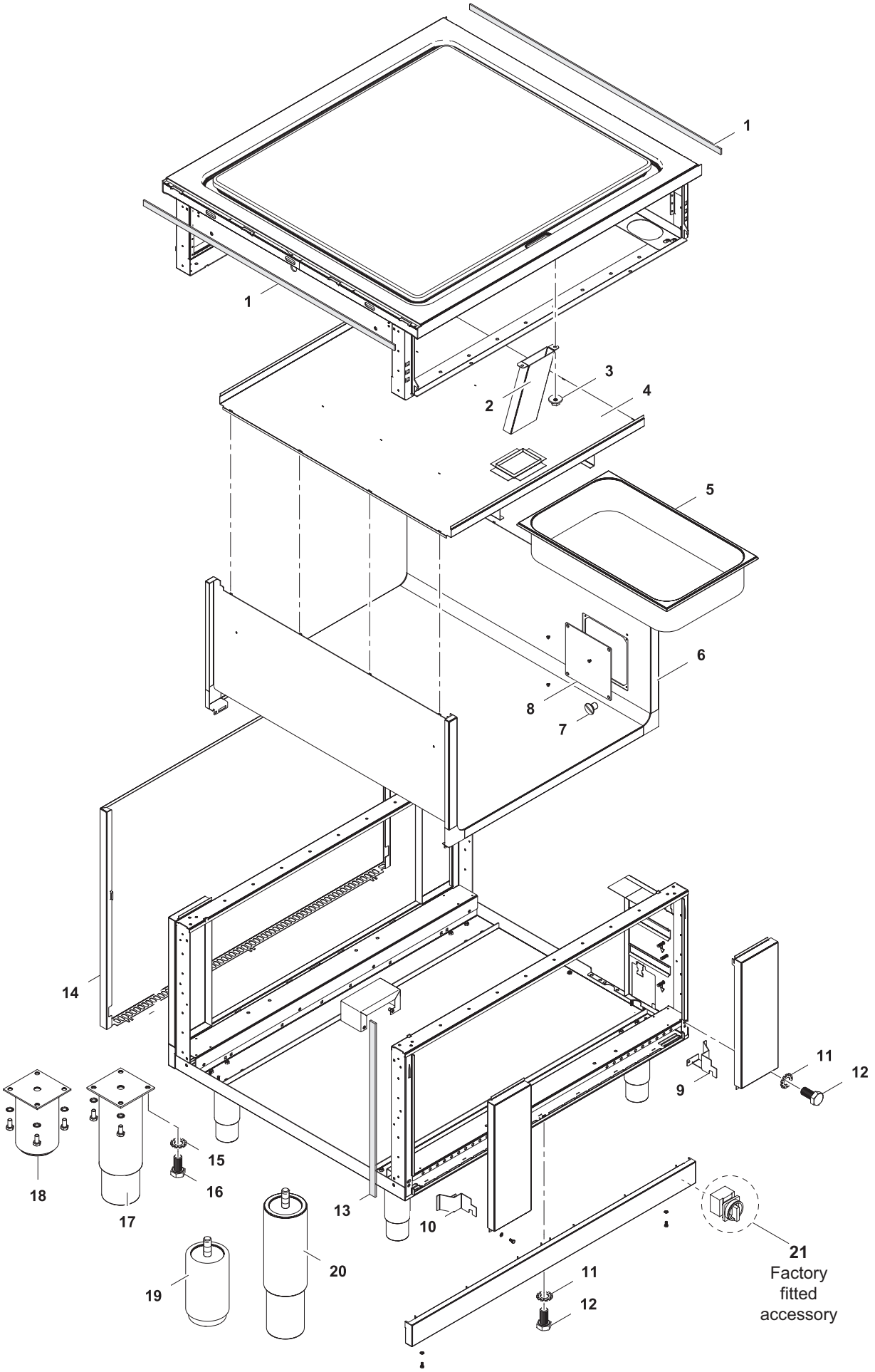

Doc. № 599A2AW00 / 82.8120.03

✱ Components on demand
✱ Teile auf Anfrage

6	Alias	Code	Bezeichnung	Description	Ref.	Valid from Serial N°
1	82.7464	0C2496	Dichtband (klebend)	Sealing strip	all types	
2	82.0651	0G7294	Ablauf in Korpus	Drain in copus	H700/800	
3	712 044120.04	0G4918	Kep-Mutter M4	Keps nut M4	H700/800	
4	82.0101.13	✱	Korpusdeckel H2 W500/D800/900/850	Cover for corpus H2 W500/D800/900/850	k m o u w	
	82.0101.14	✱	Korpusdeckel H2 W800/D800/850	Cover for corpus H2 W800/D800/850	l p v	
	82.0101.19	✱	Korpusdeckel H2 W1000/D900	Cover for corpus H2 W1000/D900	n x	
	82.0156.01	✱	Korpusdeckel 2S H2 W500/D800	Cover for corpus 2S H2 W500/D800	q y	
	82.0156.03	✱	Korpusdeckel 2S H2 W500/D900	Cover for corpus 2S H2 W500/D900	s 1	
	82.0156.04	✱	Korpusdeckel 2S H2 W800/D800	Cover for corpus 2S H2 W800/D800	r z	
	82.0156.09	✱	Korpusdeckel 2S H2 W1000/D900	Cover for corpus 2S H2 W1000/D900	t 2	
5	1 110 1355	0S1733	Schale 1/1 GN H100	Container GN 1/1 H100	4Zone, H700/800	
	82.7333	0G7382	Schale 1/3GN H100	Container GN 1/3 H100	2Zone, H700/800	
6	82.0220.01	0G7048	Korpus komplett W500 1S H2 D800/900	Corpus complete W500 1S H2 D800/900	k m u w	
	82.0230.01	✱	Korpus komplett W500 2S H2 D800	Corpus complete W500 2S H2 D800	q y	
	82.0230.03	✱	Korpus komplett W500 2S H2 D900	Corpus complete W500 2S H2 D900	s 1	
	82.2436.04	✱	Korpus komplett W500 1S NHC D850	Corpus complete W500 1S NHC D850	o	
	82.0220.11	0G7046	Korpus komplett W800 1S H2 D800	Corpus complete W800 1S H2 D800	l v	
	82.2436.09	0G7047	Korpus komplett W800 1S NHC D850	Corpus complete W800 1S NHC D850	p	
	82.0230.21	✱	Korpus komplett W800 2S H2 D800	Corpus complete W800 2S H2 D800	r z	
	82.0220.21	✱	Korpus komplett W1000 1S H2 D900	Corpus complete W1000 1S H2 D900	n x	
	82.0230.43	✱	Korpus komplett W1000 2S H2 D900	Corpus complete W1000 2S H2 D900	t 2	
7	1 701 1145	0G6758	Senkkopfschraube M4x6	Countersunk screw M4x6	H700/800	
8	82.0223.01	0G6757	Deckel Servicefenster	Cover plate	H700/800	
9	82.0113.02	0G7385	Leitblech H700 rechts	Aeration sheet right H700	H700	
	82.0113.12	0G7388	Leitblech H800 rechts	Aeration sheet right H800	H800	
10	82.0113.01	0G7386	Leitblech H700 links	Aeration sheet left H700	H700	
	82.0113.11	0G7387	Leitblech H800 links	Aeration sheet left H800	H800	
11	1 701 7002	0G2923	Fächerscheibe M5	Fan washer M5	H700/800	
12	1 701 2579	0G4020	Sechskantschraube M5x16	Hex bolt M5x16	H700/800	
13	82.7467	0C7307	Dichtung 5mm	Sealing sides 5mm	H700/800	5101....
14	82.1102.04	✱	Rückwand 1S 500x700	Back panel 1S 500x700	2Zone/H700	
	82.1102.24	✱	Rückwand 1S 500x800	Back panel 1S 500x800	2Zone/H800	
	82.1102.07	0G7286	Rückwand 1S 800x700	Back panel 1S 800x700	l p r	
	82.1102.27	✱	Rückwand 1S 800x800	Back panel 1S 800x800	v z	
	82.1102.09	✱	Rückwand 1S 1000x700	Back panel 1S 1000x700	n t	
	82.1102.29	✱	Rückwand 1S 1000x800	Back panel 1S 1000x800	x 2	
15	1 701 5051	0G6753	Fächerscheibe M6	Fan washer M6	H700/800	
16	1 701 2600	0KT919	Sechskantschraube M6x12	Hex bolt M6x12	H700/800	
17	86.0001	0G5391	Stellfuß 2" 145-252mm rund	Adjustable feet 2" 145-252mm, round	H700	
18	86.2385	0G6140	Stellfuß 2" 100mm	Adjustable feet 2" 100mm	H800	
19	82.0350.02	0G7957	Fuss M10 100mm	Foot M10 100mm	H800	7141...
20	82.0350.01	0G7958	Fuss M10 200mm	Foot M10 200mm	H700	7141...
21	76.9164.01	0G2137	Hauptschalter 25A	Main switch 25A	2 zones, H800	8041...
21	76.9164.02	0K4979	Hauptschalter 63A	Main switch 63A	4 zones, H800	8041...

✱ Components on demand
✱ Teile auf Anfrage

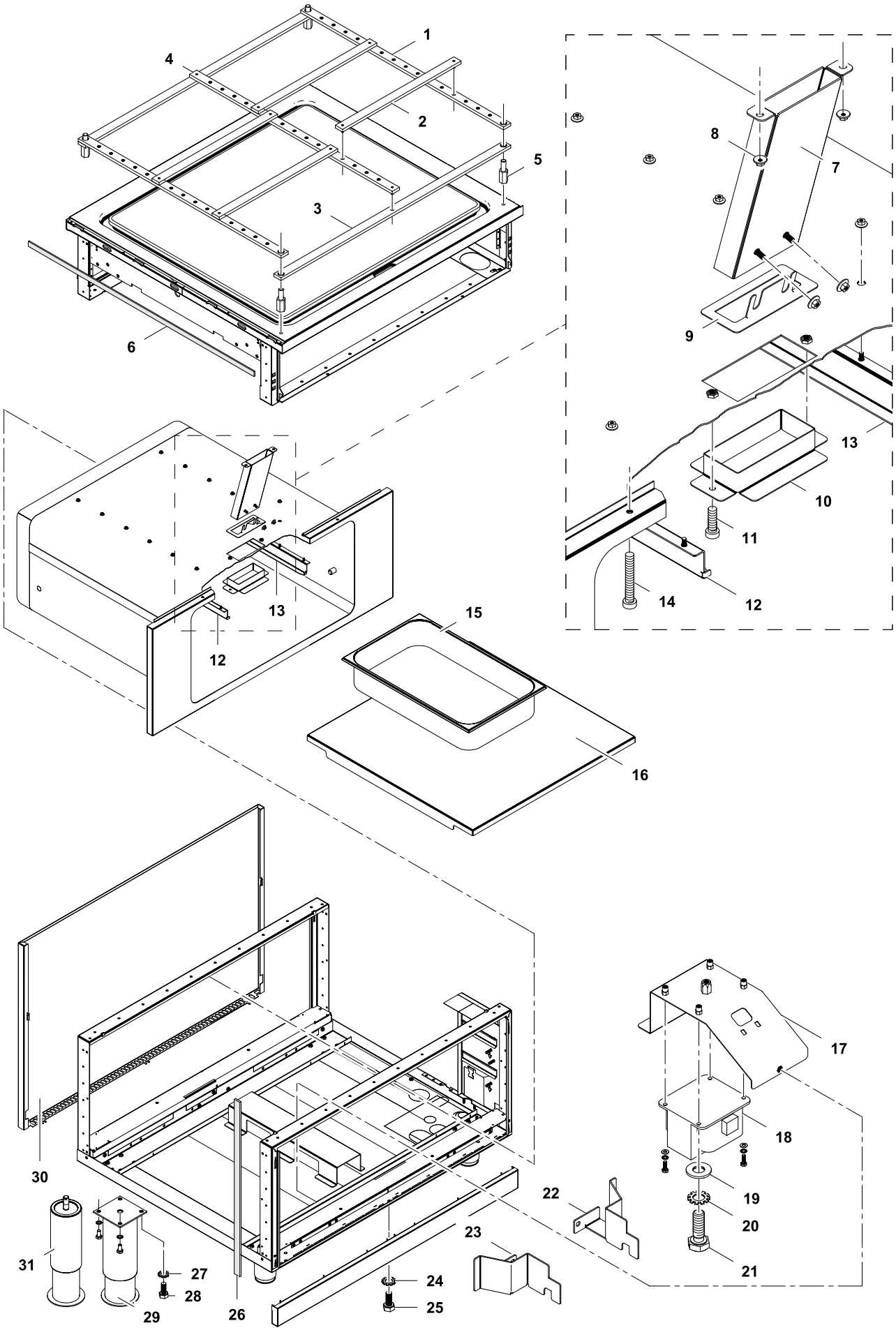

Doc. № 599A2AW00 / 82.8120.03

✱ Components on demand
✱ Teile auf Anfrage

7	Alias	Code	Bezeichnung	Description	Ref.	Valid from Serial N°
	83.3769	0G7016	Schlingerstnage komplet 500	Set roling racks 500	2Zones Marine	
	83.3745	0G7017	Schlingerstnage komplet 1000	Set roling racks 1000	4Zones Marine	
1	83.3741	0G7218	Schiene-1000 15xØ8	Rolling rack-1000 15xØ8	4Zones Marine	
	83.3768	0G7295	Schiene-500 15xØ8	Rolling rack-500 15xØ8	2Zones Marine	
2	83.3744	0G7219	Schiene-1000 2xØ6	Rolling rack-1000 2xØ6	4Zones Marine	
	83.3767	0G7296	Schiene-500 2xØ6	Rolling rack-500 2xØ6	2Zones Marine	
3	83.3743	0G7220	Schiene-1000 2xØ17	Rolling rack-1000 2xØ17	4Zones Marine	
	83.3766	0G7297	Schiene-500 2xØ17	Rolling rack-500 2xØ17	2Zones Marine	
4	83.3742	0G7221	Schiene-1000 15xØ8 mittig	Rolling rack-1000 15xØ8 mittig	4Zones Marine	
5	82.7495	0G7362	Abstandsbolzen 22x80/M8	Spacer bolt 22x80/M8	all types Marine	
6	82.7464	0C2496	Dichtband (klebend)	Sealing strip	all types Marine	
7	82.0705	0G7010	Ablauf in Korpus	Drain in copus	H700 Marine	
8	712 044120.04	0G4918	Kep-Mutter M4	Keps nut M4	H700 Marine	
9	82.0704	0G7011	Spritzschutzdeckel	Splash protection	H700 Marine	
10	82.0706	0G7009	Stutzen zu Ablauf	Drain flange	H700 Marine	
11	1 701 1069	0G6959	Flachkopfschraube M5x12	Flat head screw M5x12	H700 Marine	
12	82.0265.01	0G7272	Halter GN-Schale links (Marine)	GN container suport left	H700 Marine	
13	82.0265.03	0G7273	Halter GN-Schale rechts (Marine)	GN container suport right	H700 Marine	
14	1 701 1150	0G7041	Flachkopfschraube M5x45	Flat head screw M5x45	H700 Marine	
15	1 110 1355	0S1733	Schale 1/1 GN H100	Container GN 1/1 H100	4Zone/H700 Marine	
	82.7333	0G7382	Schale 1/3GN H100	Container GN 1/3 H100	2Zone/H700 Marine	
16	83.3718.01	0G6890	Tablar 400 für H3 Korpus	Shelf for 400 H3 corpus	2Zone/H700 Marine	
	83.3718.03	0G6920	Tablar 900 für H3 Korpus	Shelf for 900 H3 corpus	4Zone/H700Marine	
17	82.3029	0G7057	Halteblech	Metal support	all types Marine	
18	82.9209	006710	Autotransformer 0-240-400-440V - 150VA	Autotransformer 0-240-400-440V - 150VA	all types Marine	
19	1 701 3502	0G3595	Unterlegscheibe M4	Washer M4	all types Marine	
20	1 701 7060		Fächerscheibe M4	Fan washer M4	all types Marine	
21	1 701 2629	0G5854	Sechskantschraube M4x12	Hex bolt M4x12	all types Marine	
22	82.0113.02	0G7385	Leitblech H700 rechts	Aeration sheet right H700	H700 Marine	
23	82.0113.01	0G7386	Leitblech H700 links	Aeration sheet left H700	H700 Marine	
24	1 701 7002	0G2923	Fächerscheibe M5	Fan washer M5	H700 Marine	
25	1 701 2579	0G4020	Sechskantschraube M5x16	Hex bolt M5x16	H700 Marine	
26	82.7467	0C7307	Dichtung 5mm	Sealing sides 5mm	H700 Marine	
27	1 701 5051	0G6753	Fächerscheibe M6	Fan washer M6	H700 Marine	
28	1 701 2600	0KT919	Sechskantschraube M6x12	Hex bolt M6x12	H700 Marine	
29	83.3728	0G6886	Stellfuß 2" Marine 145-252mm	Adjustable feet 2" Marine 145-252mm	H700 Marine	
30	82.1020.05	0G7280	Rückwand 500x700	Back panel 500x700	2Zones/H700 Marine	
	82.1020.10	0G7281	Rückwand 1000x700	Back panel 1000x700	4Zones/H700 Marine	
31	82.0350.03		Fuss M10 200mm Marine	Foot M10 200mm Marine	H700 Marine	7141...

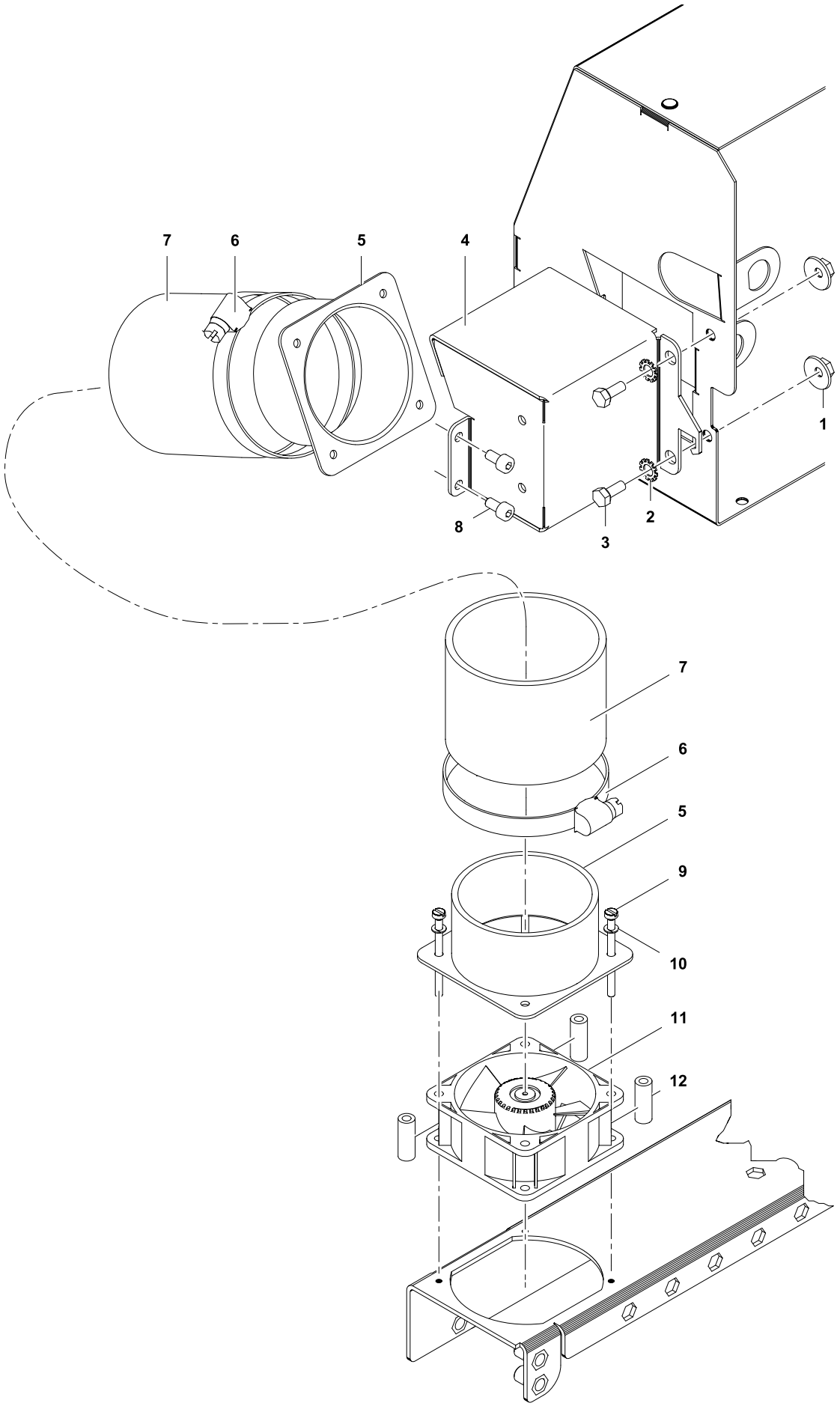

✱ Components on demand
✱ Teile auf Anfrage

8	Alias	Code	Bezeichnung	Description	Ref.	Valid from Serial N°
1	712 044120.05	0G3998	Kepsmutter M5	Hex nut M5	all types	
2	1 701 7002	0G2923	Fächerscheibe M5	Fan washer M5	all types	
3	1 701 2579	0G4020	Sechskantschraube M5x16	Hex bolt M5x16	all types	
4	82.3001	✱	Standardventilationsbox links	Ventilation box left	all types	
5	82.7550.01	0G7868	Rohrstutzen gerade	Pipe socket straight	all types	
6	1 201 2209	0G7664	Schlauchschelle 50-70mm	Hose clamp 50-70mm	all types	
7	83.9010	0G6701	Alu-Flexschlauch Ø60/66	Flexible aluminium hose Ø60/66	all types	
8	1 101 8170	0G3250	Innensechskantschraube M4x8	Allen bolt M4x8	all types	
9	1 701 1083	0G5755	Zylinderschraube M3x30	Socket cap screw M3x30	all types	
10	1 701 3540	0K1478	Unterlegscheibe M3	Washer M3	all types	
11	82.7382	0G6338	Ventilator 60x60x25 622HH (1W)	Cooling fan 60x60x25 622HH (1W)	all types	
	82.7159	0G6274	Ventilator 60x60x25 622HH (3.5W)	Cooling fan 60x60x25 622HH (3.5W)	all types	
12	82.0133	0G6755	Verstärkungsrohr Ventilator	Cooling fan support	all types	

✱ Components on demand
✱ Teile auf Anfrage

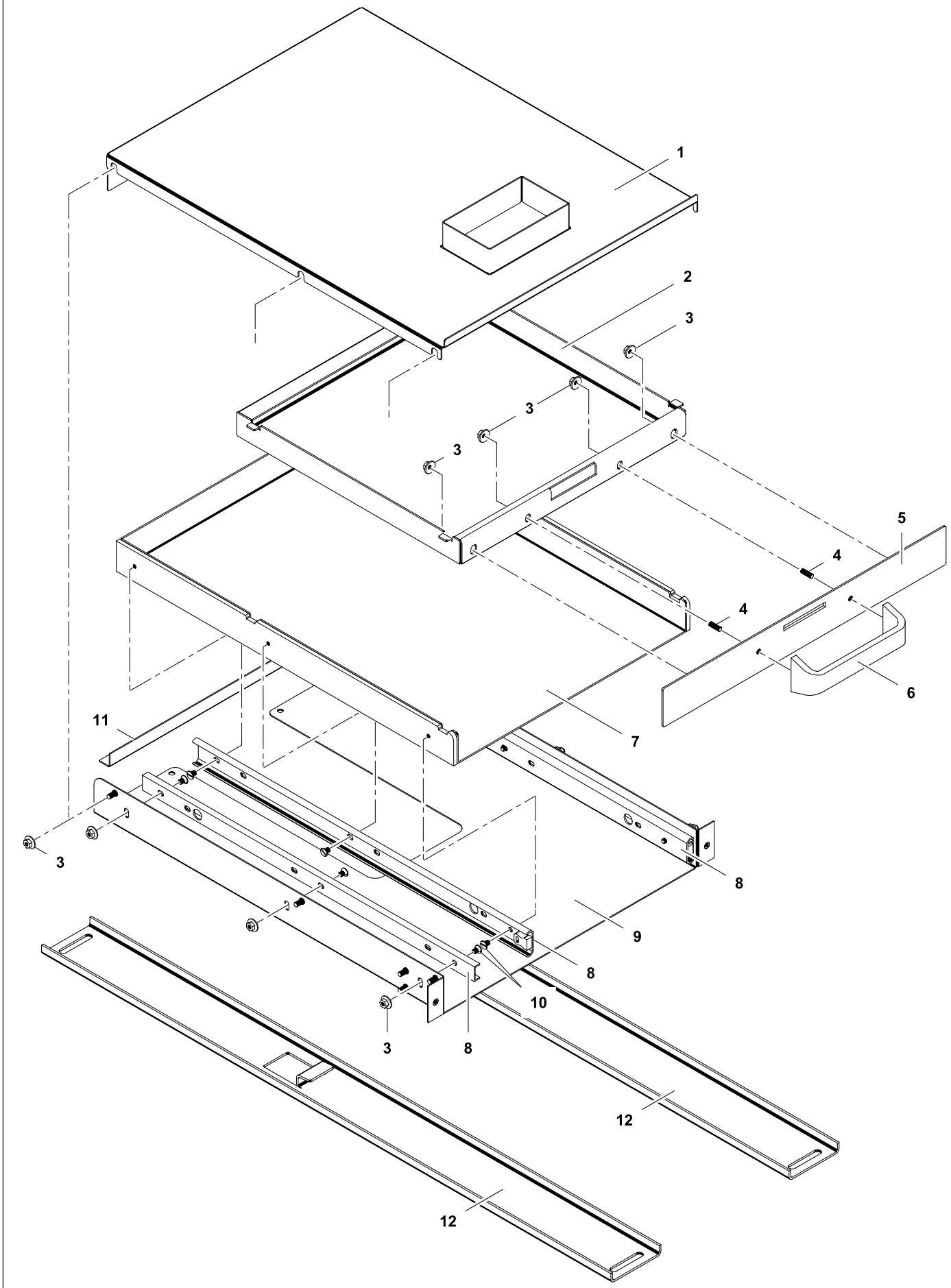

Doc. № 599A2AW00 / 82.8120.03

✱ Components on demand
✱ Teile auf Anfrage

9	Alias	Code	Bezeichnung	Description	Ref.	Valid from Serial N°
			Valid until 7391...			
1	82.4280.07	0G7216	Schubladenabdeckung	Drawer cover	all H250	
2	82.4281.02	0G7031	Schubladeneinsatz	Drawer insert	all H250	
3	712 044120.04	0G4918	Keps-Mutter M4	Keps nut M4	all H250	
4	1 701 5532	0G7217	Gewindestift M4x12	Set screw M4x12	all H250	
5	82.2279	0G7032	Frontblech Schublade	Front panel drawer	all H250	
	82.2941		Frontblech Schublade	Front panel drawer	all H250	7011...
6	82.2209	0G7033	Griff	Handle	all H250	
7	82.4284.02	0G7030	Schubladenauszug	Drawer	all H250	
8	82.7201	0G6687	Führungsschiene	Rail	all H250	
9	82.4279	0G7034	Schubladenschacht	Drawer support	all H250	
	82.2942		Schubladenschacht	Drawer support	all H250	7011...
10	1 701 1145	0G6758	Senkkopfschraube M4x6	Countersunk screw M4x6	all H250	
11	82.4373	0G7035	Verstärkung	Reinforcement	all H250	
	82.2944		Verstärkung	Reinforcement	all H250	7011...
12	82.6504.03	✱	Aufhängung Schublade D800	Drawer guide D800	all D800/H250	
	82.6504.04	✱	Aufhängung Schublade D850	Drawer guide D850	all D850/H250	
	82.6504.05	✱	Aufhängung Schublade D900	Drawer guide D900	all D900/H250	

✱ Components on demand
✱ Teile auf Anfrage

9	Fettauffangschale von 7401...	Grease drawer from 7401...

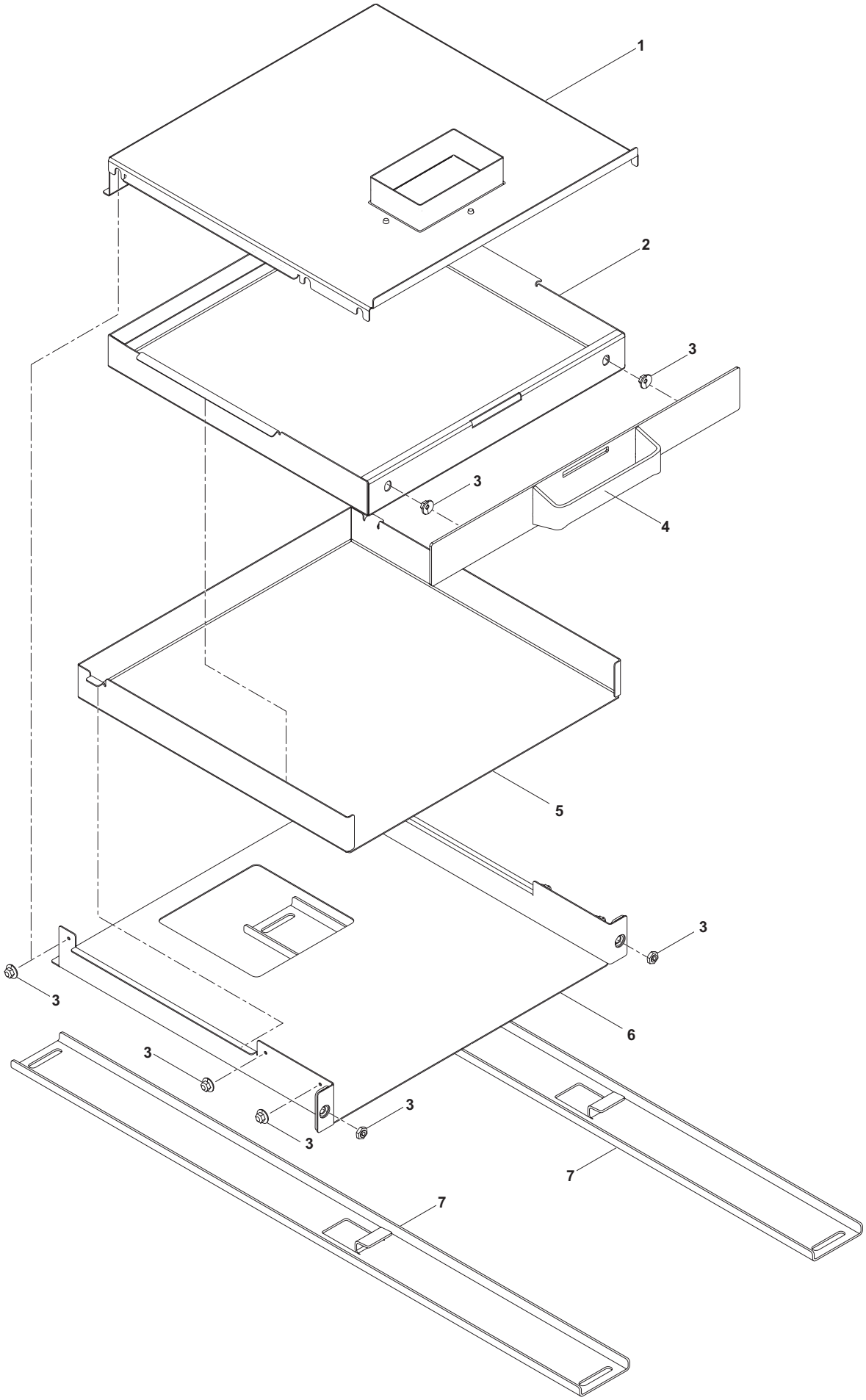

Doc. № 599A2AW00 / 82.8120.03

✱ Components on demand
✱ Teile auf Anfrage

9	Alias	Code	Bezeichnung	Description	Ref.	Valid from Serial N°
			Valid from 7401...			
1	82.2977.07	0G8234	Schubladenabdeckung	Drawer cover	D800/D900	
	82.2977.21	0G8235	Schubladenabdeckung	Drawer cover	D850	
2	82.2973	0G8250	Schubladeneinsatz	Drawer insert		
3	712 044120.04	0G4918	Keps-Mutter M4	Keps nut M4		
4	82.2972	0G8251	Frontblech komplet	Front panel complete		
5	82.2978	0G8252	Schubladenauszug	Drawer		
6	82.2980	0G8253	Schubladenschacht	Drawer support		
7	82.6732.03	0G8257	Aufhängung Schublade	Drawer guide	D800	
	82.6732.04	0G8245	Aufhängung Schublade	Drawer guide	D850	
	82.6732.05	0G8246	Aufhängung Schublade	Drawer guide	D900	

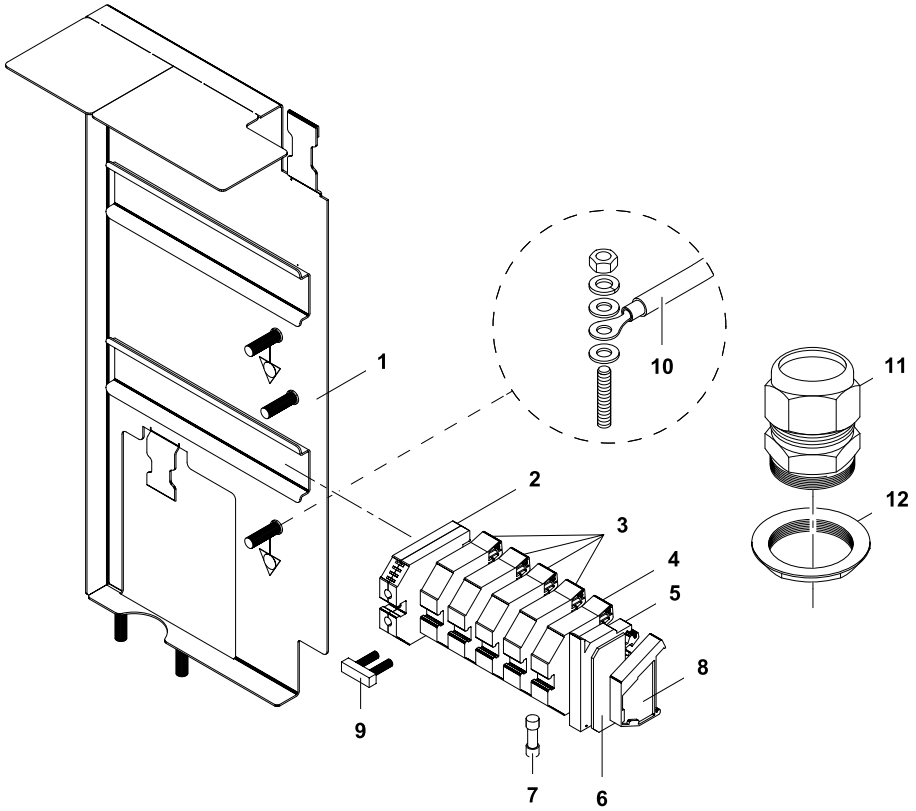

10	Alias	Code	Bezeichnung	Description	Ref.	Valid from Serial N°
1	82.3030.02	0G6423	Klemmenträger	Terminal support	all types	
	82.3051	0G7430	Klemmenträger	Terminal support	all types	5431...
2	75.2011.03	0KX291	Schutzleiterklemme 16mm²	Ground conductor terminal 16mm²	all types	
3	75.2010.40	0KI280	Reihenklemme 16mm² grau	Terminal block 16mm² grey	all types/not in Marine	
4	75.2010.41	0G3488	Nullleiterklemme 16mm² blau	Neutral wire terminal 16mm² blue	all types	
5	75.2012.01	0K5155	Sicherungsklemme	Fuse holder terminal	all types	
6	75.2012.02	0T2599	Abschlusswand	Cover for fuse holder terminal	all types	
7	712 344362.01	0G5814	Sicherung 5x20 1 00A	Fuse 5x20 1 00AF	all types	
8	75.2013	0KX290	Arretierstück	Fixation	all types	
9	75.2010.44	0KT731	Querverbinder	Cross connection	all types	
10	82.9103	0G6424	Kabel Haupterddraht L400 6mm²	Main earthing cable L400 6mm²	all types	
	62.1504.03	0G5977	Verdrahtung 2.5mmx800	Wiring 2.5mmx800	all types	
11	82.2809	0C0068	PG21 Kabelverschraubung	Cable gland PG21	all types	
12	82.9226	0G7024	PG21 Sicherungsmuter	Lock nut PG21	all types	

✱ Components on demand
✱ Teile auf Anfrage