SPARE PARTS CATALOGUE

THERMALINE 80/85/90

DE EL. GROSSKOCHPLATTEN AUF BACKOFEN
EL. GROSSKOCHPLATTEN AUF WÄRMESCHRANK
EN EL. SOLID TOPS ON STATIC OVEN
EL. SOLID TOPS ON WARMING CABINET

Units with oven

PNC	Factory Model	Ref.	Description
588411	MALLEAH8AO	a	SOLID TOP ON OVEN, 1-SIDE, 800X800X700H
588412	MALLEBH8AO	a	SOLID TOP ON OVEN, 1-SIDE, C-BOARD, 800X800X700H
588413	MALNECH8AO	b	SOLID TOP ON PASSTHROUGH OVEN, 2-SIDE, 800X800X700H
588414	MALMEAH8AO	c	ECO TOP ON OVEN, 1-SIDE, 800X800X700H
588415	MALMEBH8AO	c	ECO TOP ON OVEN, 1-SIDE, C-BOARD, 800X800X700H
588416	MALOECH8AO	d	ECO TOP ON PASSTHROUGH OVEN, 2-SIDE, 800X800X700H
588417	MALLFAH8AO	e	SOLID TOP ON OVEN, 1-SIDE, 800X800X800H
588418	MALLFBH8AO	e	SOLID TOP ON OVEN, 1-SIDE, C-BOARD, 800X800X800H
588419	MALNFCH8AO	f	SOLID TOP ON PASSTHROUGH OVEN, 2-SIDE, 800X800X800H
588420	MALMFAH8AO	g	ECO TOP ON OVEN, 1-SIDE, 800X800X800H
588421	MALMFBH8AO	g	ECO TOP ON OVEN, 1-SIDE, C-BOARD, 800X800X800H
588422	MALOFCH8AO	h	ECO TOP ON PASSTHROUGH OVEN, 2-SIDE, 800X800X800H
588694	MBLLGBH8AO	i	SOLID TOP ON OVEN, 1-SIDE, C-BOARD, 800X850X700H
588695	MBLMGBH8AO	j	ECO TOP ON OVEN, 1-SIDE, C-BOARD, 800X850X700H
589649	MCLLEAJ8AO	k	SOLID TOP ON OVEN, 1-SIDE, 1000X900X700H
589650	MCLLEBJ8AO	k	SOLID TOP ON OVEN, 1-SIDE, C-BOARD, 1000X900X700H
589651	MCLNECJ8AO	l	SOLID TOP ON PASSTHROUGH OVEN, 2-SIDE, 1000X900X700H
589652	MCLMEAJ8AO	m	ECO TOP ON OVEN, 1-SIDE, 1000X900X700H
589653	MCLMEBJ8AO	m	ECO TOP ON OVEN, 1-SIDE, C-BOARD, 1000X900X700H
589654	MCLOECJ8AO	n	ECO TOP ON PASSTHROUGH OVEN, 2-SIDE, 1000X900X700H
589655	MCLLFAJ8AO	o	SOLID TOP ON OVEN, 1-SIDE, 1000X900X800H
589656	MCLLFBJ8AO	o	SOLID TOP ON OVEN, 1-SIDE, C-BOARD, 1000X900X800H
589657	MCLNFCJ8AO	p	SOLID TOP ON PASSTHROUGH OVEN, 2-SIDE, 1000X900X800H
589658	MCLMFAJ8AO	q	ECO TOP ON OVEN, 1-SIDE, 1000X900X800H
589659	MCLMFBJ8AO	q	ECO TOP ON OVEN, 1-SIDE, C-BOARD, 1000X900X800H
589660	MCLOFCJ8AO	r	ECO TOP ON PASSTHROUGH OVEN, 2-SIDE, 1000X900X800H
589882	MCLLEAJ8DM	s	MARINE* SOLID TOP ON OVEN, 1-SIDE, 1000X900X700H
589883	MCLNECJ8DM	t	MARINE* SOLID TOP ON PASSTHROUGH OVEN, 2-SIDE, 1000X900X700H
589884	MCLMEAJ8DM	u	MARINE* ECO TOP ON OVEN, 1-SIDE, 1000X900X700H
589885	MCLOECJ8DM	v	MARINE* ECO TOP ON PASSTHROUGH OVEN, 2-SIDE, 1000X900X700H

Units with warming cabinet

PNC	Factory Model	Ref.	Description
588457	MALPEAH4AO		EL. SOLID TOP ON WARMING CABINET, 800X800X700H
588458	MALPEBH4AO		EL. SOLID TOP ON WARMING CABINET, C-BOARD, 800X800X700H
588459	MALRECH4AO		EL. SOLID TOP ON WARMING CABINET, PASSTHROUGH, 800X800X700H
588460	MALQEAH4AO		EL. ECO TOP ON WARMING CABINET, 800X800X700H
588461	MALQEBH4AO		EL. ECO TOP ON WARMING CABINET, C-BOARD, 800X800X700H
588462	MALSECH4AO		EL. ECO TOP ON WARMING CABINET, PASSTHROUGH, 800X800X700H
588463	MALPFAH4AO		EL. SOLID TOP ON WARMING CABINET, 800X800X800H
588464	MALPFBH4AO		EL. SOLID TOP ON WARMING CABINET, C-BOARD, 800X800X800H
588465	MALRFCH4AO		EL. SOLID TOP ON WARMING CABINET, PASSTHROUGH, 800X800X800H
588466	MALQFAH4AO		EL. ECO TOP ON WARMING CABINET, 800X800X800H
588467	MALQFBH4AO		EL. ECO TOP ON WARMING CABINET, C-BOARD, 800X800X800H
588468	MALSFCH4AO		EL. ECO TOP ON WARMING CABINET, PASSTHROUGH, 800X800X800H
588704	MBLPGBH4AO		EL. SOLID TOP ON WARMING CABINET, C-BOARD, 800X850X700H
588705	MBLQGBH4AO		EL. ECO TOP ON WARMING CABINET, C-BOARD, 800X850X700H
588706	MBLTGBH4AO		EL. SOLID TOP ON WARMING CABINET, NHC, C-BOARD, 800X850X700H
588707	MBLUGBH4AO		EL. ECO TOP ON WARMING CABINET, NHC, C-BOARD, 800X850X700H
589695	MCLPEAJ4AO		EL. SOLID TOP ON WARMING CABINET, 1000X900X700H
589696	MCLPEBJ4AO		EL. SOLID TOP ON WARMING CABINET, C-BOARD, 1000X900X700H
589697	MCLRECJ4AO		EL. SOLID TOP ON WARMING CABINET, PASSTHROUGH, 1000X900X700H
589698	MCLQEAJ4AO		EL. ECO TOP ON WARMING CABINET, 1000X900X700H
589699	MCLQEBJ4AO		EL. ECO TOP ON WARMING CABINET, C-BOARD, 1000X900X700H
589700	MCLSECJ4AO		EL. ECO TOP ON WARMING CABINET, PASSTHROUGH, 1000X900X700H
589701	MCLPFAJ4AO		EL. SOLID TOP ON WARMING CABINET, 1000X900X800H
589702	MCLPFBJ4AO		EL. SOLID TOP ON WARMING CABINET, C-BOARD, 1000X900X800H
589703	MCLRFCJ4AO		EL. SOLID TOP ON WARMING CABINET, PASSTHROUGH, 1000X900X800H
589704	MCLQFAJ4AO		EL. ECO TOP ON WARMING CABINET, 1000X900X800H
589705	MCLQFBJ4AO		EL. ECO TOP ON WARMING CABINET, C-BOARD, 1000X900X800H
589706	MCLSFCJ4AO		EL. ECO TOP ON WARMING CABINET, PASSTHROUGH, 1000X900X800H

Page	Index	Last Updates	Page	Ref.
3	Terminal	12/2015	all	
4	Electrical compartment	11/2016	5/13/17/19/23	
6	Sparta box	04/2017	4/18/22	
8	Mechanical module	11/2017	5	210
10	Old grease drawer	02/2018	12, 13	New drawer
12	New grease drawer	05/2018	21	1012
14	Aeration kit	08/2018	9	401
16	Top	11/2018	9	403
17	Control panel warming cabinet	12/2018	5 / 17 / 25	216 / 807 / 1238
18	Warming cabinet	05/2019	5 / 17 / 19 / 25	215, 216 / 806, 807, 812, 813 /
20	Base warming cabinet			937, 938
22	Oven	05/2020	9	408, 409, 410
24	Oven Base / Control Panel	05/2024	5 / 14	209 / 605b

1	Klemmenschiene	Terminal

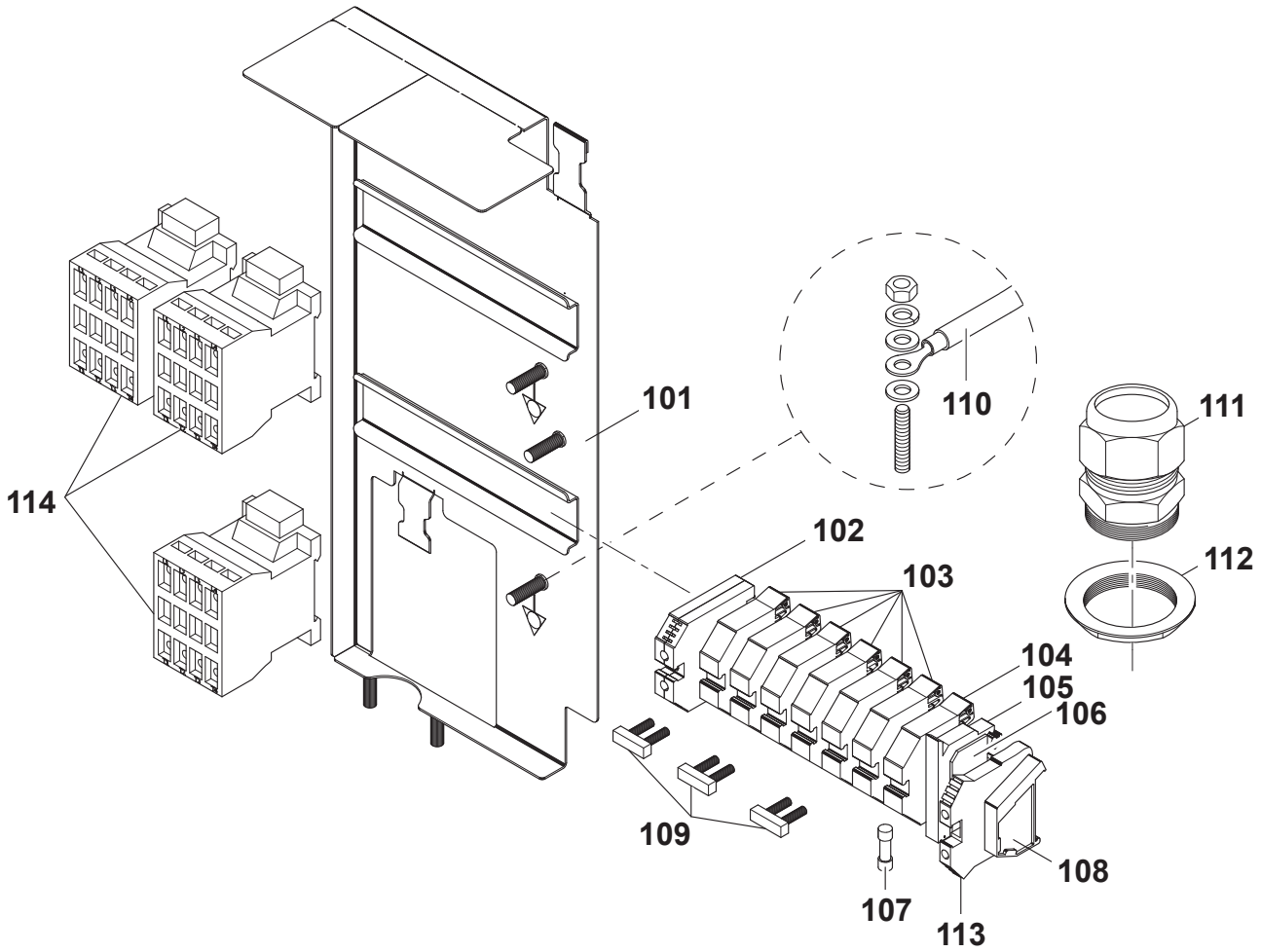

1	Alias	Code	Bezeichnung	Description	Ref.	Valid from Serial N°
101	82.3030.02	0G6423	Klemmenträger	Terminal support	all types	
101	82.3051	0G7430	Klemmenträger	Terminal support	all types	5431...
102	75.2011.03	0KX291	Schutzleiterklemme 16mm²	Ground conductor terminal 16mm²	all types	
103	75.2010.40	0KI280	Reihenklemme 16mm² grau	Terminal block 16mm² grey	all types/not in Marine	
104	75.2010.41	0G3488	Nullleiterklemme 16mm² blau	Neutral wire terminal 16mm² blue	all types	
105	75.2012.01	0K5155	Sicherungsklemme	Fuse holder terminal	all types	
106	75.2012.02	0T2599	Abschlusswand	Cover for fuse holder terminal	all types	
107	712 344362.01	0G5814	Sicherung 5x20 1 00A	Fuse 5x20 1 00AF	all types	
108	75.2013	0KX290	Arretierstück	Fixation	all types	
109	75.2010.44	0KT731	Querverbinder	Cross connection	all types	
110	82.9103	0G6424	Kabel Haupterddraht L400 6mm²	Main earthing cable L400 6mm²	all types	
110	62.1504.03	0G5977	Verdrahtung 2.5mmx800	Wiring 2.5mmx800	all types	
111	82.2809	0C0068	PG21 Kabelverschraubung	Cable gland PG21	all types	
112	82.9226	0G7024	PG21 Sicherungsmuter	Lock nut PG21	all types	
113	75.2010.20	0G7080	Reihenklemme 4mm² grau	Terminal block 4mm² grey	Marine	
114	1 115 1757	0G4645	Schütz K3-14x027 + K2-E230	Conductor K3-24x027 + K2-E230	Marine	

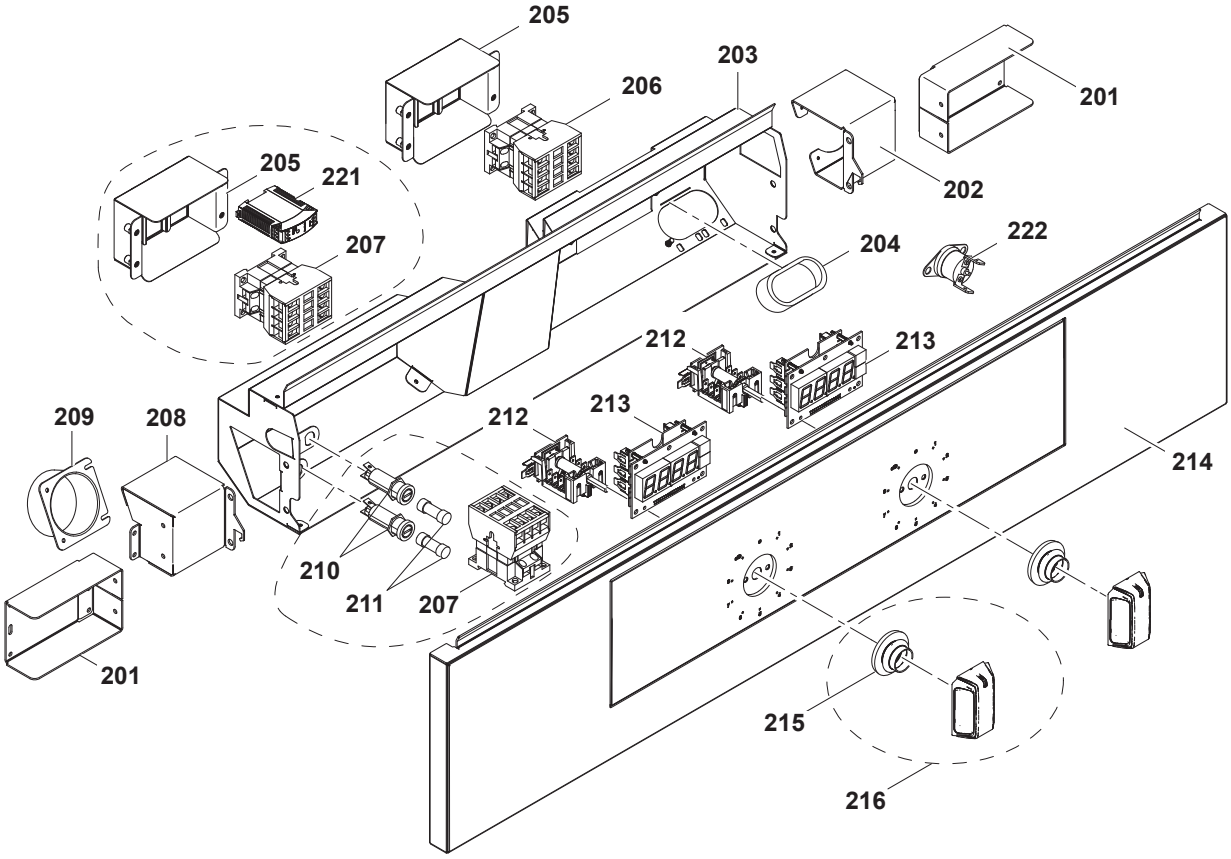

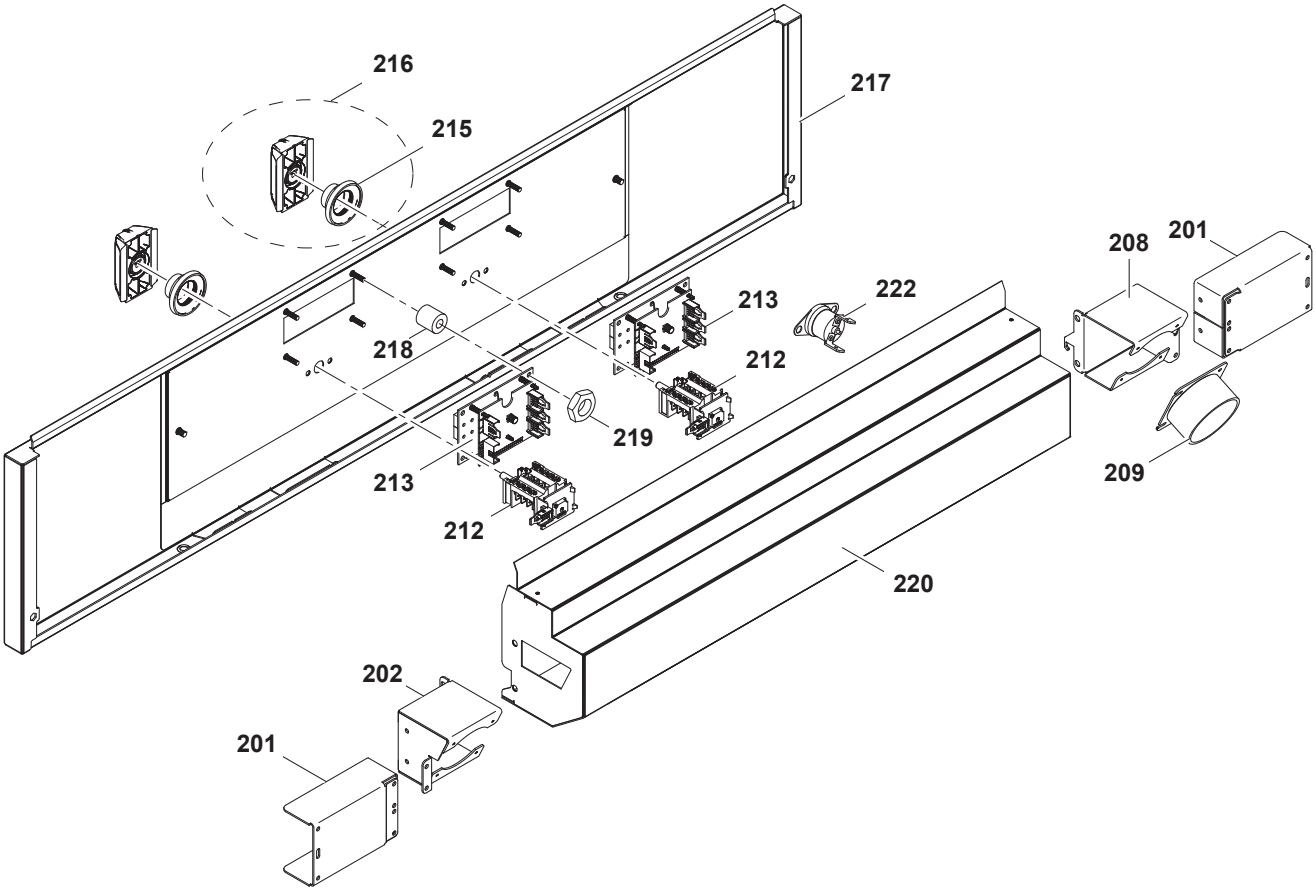

✱ Components on demand
✱ Teile auf Anfrage

2	Alias	Code	Bezeichnung	Description	Ref.	Valid from Serial N°
201	82.3004.01	0G7448	Halterung Ventilationsbox L=100	Ventilation box support	all types	
202	82.3002	0G7450	Standardventilationsbox rechts	Ventilation box right	all types	
203	82.3034	✱	Elektrobox 4 Zonen	Electrical compartment 4 zones	all types	
204	1 201 2086	0G4872	Kantenschutz	Edge protection	all types	
205	82.3045	0G7012	Aufsteckblech	Conductor box	all types	
206	82.9228	0C2247	Schütz K2-30A00-40	Conductor K2-30A00-40	all types	
207	1 115 1757	0G4645	Schütz K3-14x027	Conductor K3-14x027	all types	
208	82.3001	✱	Standardventilationsbox links	Ventilation box left	all types	
209	82.7550.02	0G9046	Rohrstutzen schräg	Pipe socket angled	all types	
210	87.9204	0CB130	Sicherungshalter Schurter 6.3x32 500V	Fuse holder Schurter 6.3x32 500V	Marine	
211	82.9171	0TTR73	Sicherung 6.3x32 0.63A 500V	Fuse 6.3x32 0.63A 500V	Marine	
212	82.9013	0G6242	Schalter off - 9 Stufen + 10k Potent.	Switch off - 9 level + 10k potentiometer	all types	
213	82.7015	0G6246	Eurotas Display	Eurotas Display	D800/900	
213	82.7015	0G7091	Eurotas Display	Eurotas Display	D800/D900	6101...
213	72.5938.04	0KI362	Anzeigelampe grün	Indicator light, green	D850	
213	72.5938.08	0KI364	Einsteckfassung grün/gelb Ø10mm	Lamp holder, green/yellow, Ø10mm	D850	
214	82.1027.04	✱	Bedienblende 800 1S (Schublade)	Control panel 800 1S (drawer)	a c e g	
214	82.1049.04	✱	Bedienb. 800 1S INOX (Schublade)	Control panel 800 1S INOX (drawer)	i j	
214	82.1027.07	✱	Bedienblende 1000 1S (Schublade)	Control panel 1000 1S (drawer)	k m o q s u	
214	82.1027.03	✱	Bedienblende 800 2S (Schublade)	Control panel 800 2S (drawer)	b d f h	
214	82.1027.11	✱	Bedienblende 1000 2S (Schublade)	Control panel 1000 2S (drawer)	l n p r t v	
215	82.7009	0G6247	Dichtung Drehgriff	Sealing for hande	all types	
215	82.7628	0G8603	Dichtung Drehgriff	Sealing for hande	colored M2M	
216	82.6637.01	0G7693	Drehgriff Kpl.	Handle complete kit	all types	
216	82.6638.01	0G8620	Drehgriff Kpl.	Handle complete kit	colored M2M	
217	82.1027.09	✱	Bedienblende 800 2S	Control panel 800 2S	b d f h	
217	82.1027.06	✱	Bedienblende 1000 2S	Control panel 1000 2S	l n p r t v	
217	82.1000.05	✱	Blende 800	Panel 800	k m o q s u /no CB	
217	82.1000.07	0G7445	Blende 1000	Panel 1000	l n p r t v /no C-Board	
218	76.3011.01	0G3093	Distanzhalter 8mm	Spacer 8mm	D800/900	
219	712 044120.04	0G4918	Keps-Mutter M4	Keps nut M4	all types	
220	82.3036	✱	Elektrobox Rückseite	Electrical compartment backside	all 2-Sides	
221	82.9030	0G6075	DC Stromversorgung 12V	DC Power Supply 12V	all 2-Sides	7161...
222	82.9062	0G6231	Temperatur Thermostat 50 (Klickson)	Temperature Thermostat 50 (Klickson)	all 2-Sides	7161...
	82.9001	0G6461	Kabel: Sparta - Display L2200	Cable: Sparta - Display L2200	D800/D900 Standard	
	82.9002	0G6897	Kabel: Display - Display L290	Cable: Display - Display L290	D800/D900 Standard	
	82.9003	0G6899	Kabel: Potentiometer - Dispaly L200	Cable: Potentiometer - Dispaly L200	D800/D900 Standard	
	82.9009	0G6906	Kabel: Sparta - Ventilator L2000	Cable: Sparta - Ventilator L2000	all Standard	
	82.9107	0G7184	Kabel: Sparta - Sparta Kommunikation	Cable: Sparta - Sparta communication	all Standard	
	82.9077	0G7185	Kabel: X0 - RL - Heizungen 12 /3kW	Cable: X0 - RL - heating el. 12 /3kW	D800/850	
	82.9078	0G7186	Kabel: X0 - RL - Heizungen 34 /3kW	Cable: X0 - RL - heating el. 34 /3kW	D800/850	
	82.9079	0G7187	Kabel: X0 - RL - Heizungen 12 /4kW	Cable: X0 - RL - heating el. 12 /4kW	D900	
	82.9080	0G7188	Kabel: X0 - RL - Heizungen 34 /4kW	Cable: X0 - RL - heating el. 34 /4kW	D900	
	82.9125	0G7189	Kabel: Sparta - N - Schalter - P 12	Cable: Sparta - N - switch - P 12	D800	
	82.9126	0G7190	Kabel: Sparta - N - Schalter - P 34	Cable: Sparta - N - switch - P 34	D800	
	82.9081	0G7191	Kabel: Sparta - N - Schalter - P 12 XD	Cable: Sparta - N - switch - P 12 XD	D850	
	82.9082	0G7192	Kabel: Sparta - N - Schalter - P 34 XD	Cable: Sparta - N - switch - P 34 XD	D850	
	82.9083	0G7193	Kabel: Sparta - N - Schalter - P 12	Cable: Sparta - N - switch - P 12	D900	
	82.9084	0G7194	Kabel: Sparta - N - Schalter - P 34	Cable: Sparta - N - switch - P 34	D900	
	82.9022.03	0G7195	Kabel: Schalter S2/3 - Schalter S4 kurz	Cable: switch S2/3 - switch S4 short	all Standard	
	82.9224.03	0G7383	Kabel Schalter - Schütz KS	Cable switch - Sconductor KS	all Standard	
	82.9044.02	0G6181	Kabel: Sparta - Potentiometer L200	Cable: Sparta - potentiometer L200	D850	
	82.9137	0G7197	Kabel: Ventilator - Ventilator	Cable: Ventilator - Ventilator	all Standard 2-Sides	
	82.9198	0G6946	Kabelbaum Solid Top 4Z/1S Marine	Wiring harness Solid Top 4Z/1S Marine	Marine 1-Side	
	82.9215	0G6947	Kabelbaum Solid Top 4Z/2S Marine	Wiring harness Top 4Z/2S Marine	Marine 2-Sides	
	82.9284.02		Kabel: Solidtop - Stromversorgung 12V	Cable: Solidtop - Power Supply 12V	all 2-Sides	7161...

✱ Components on demand
✱ Teile auf Anfrage

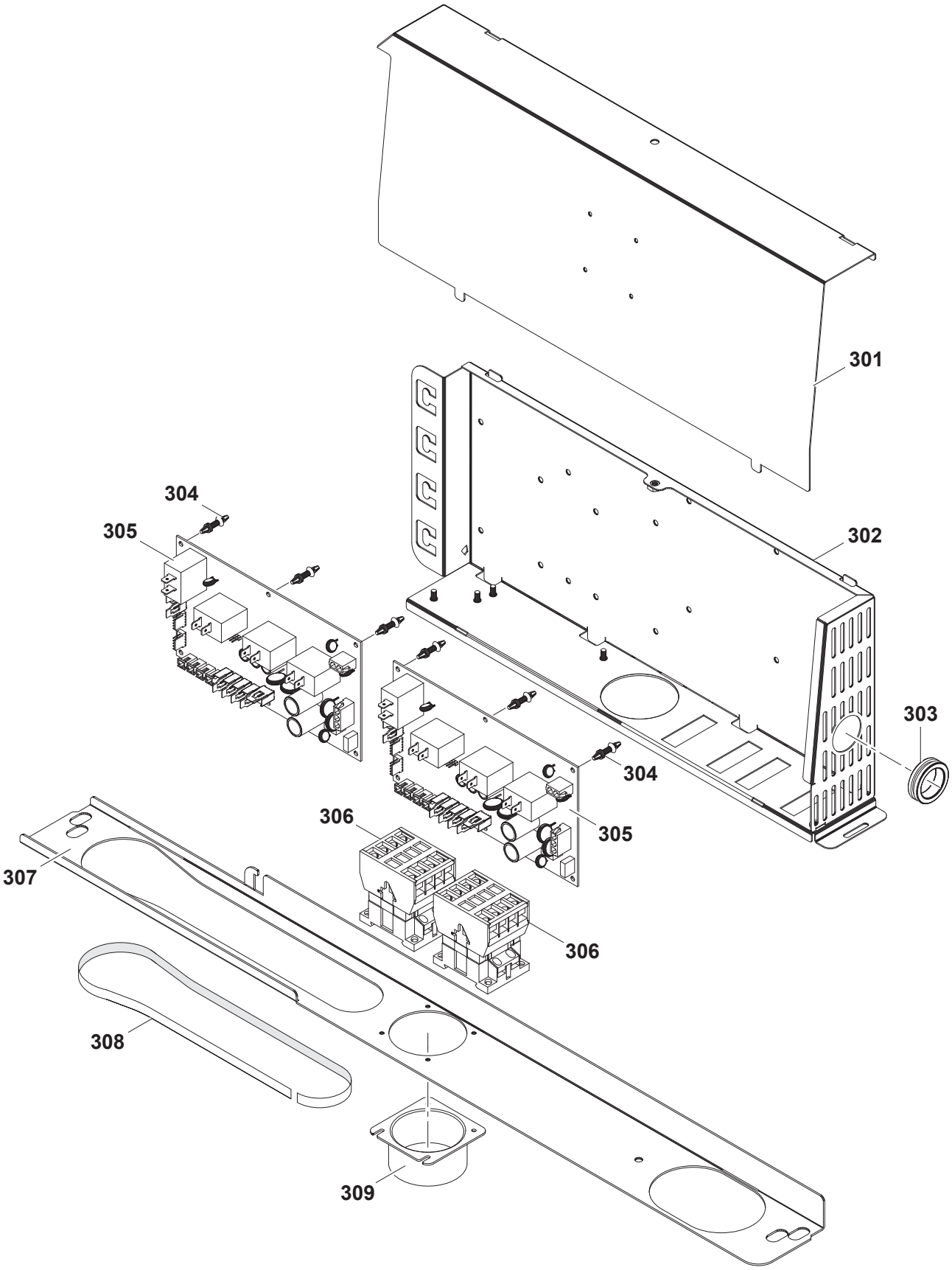

Doc. № 599A2AY00 / 82.8122.03

✱ Components on demand
✱ Teile auf Anfrage

3	Alias	Code	Bezeichnung	Description	Ref.	Valid from Serial N°
301	82.3042	✱	Deckel Elektrobox Sparta	Top cover Sparta box	all types	
302	82.3041	✱	Elektrobox Sparta	Sparta box	all types	
303	712 044961.17	0KT854	Kabeltülle Ø25/Ø31/Ø35x10	Cable: sleeve Ø25/Ø31/Ø35x10	all types	
304	75.5000.05	0C3750	Distanzhalter Kunststoff	Plastic spacer support	all types	
305	82.7014.KD	0G6221	Mainboard SPARTA	Mainboard SPARTA	all types	
306	1 115 1757	0G4645	Schütz K3-14x027 + K2-E230	Conductor K3-24x027 + K2-E230	all types	
307	82.3040.01	✱	Schiene Spatabox D800	Guide track D800	D800	
307	82.3040.02	✱	Schiene Spatabox D850	Guide track D850	D850	
307	82.3040.03	✱	Schiene Spatabox D900	Guide track D900	D900	
308	1 201 2086	0G4872	Kantenschutz	Edge protection	all types	
309	82.7550.02	0G9046	Rohrstutzen schräg	Pipe socket angled	all types	

✱ Components on demand
✱ Teile auf Anfrage

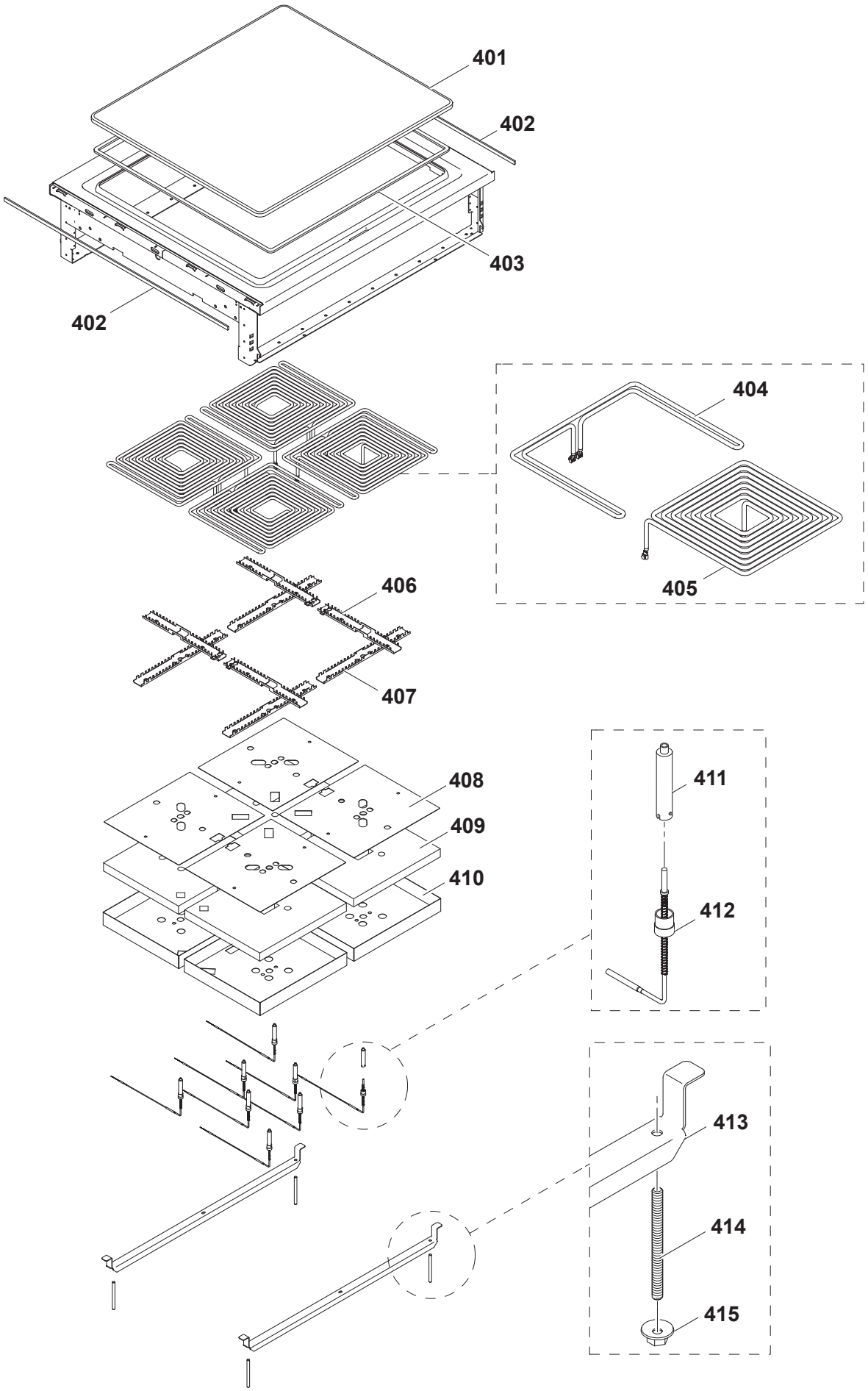

Doc. № 599A2AY00 / 82.8122.03

✱ Components on demand
✱ Teile auf Anfrage

4	Alias	Code	Bezeichnung	Description	Ref.	Valid from Serial N°
401	82.7322.02	0G7200	Kochplatte ECO Top 800x800/850 14mm	Cooking plate ECO top 800x800/850 14mm	ECO top D800/850	until 8341...
401	82.7322.03	0G7201	Kochplatte Solid Top 800x800/850 14mm	Cooking plate Solid top 800x800/850 14mm	Solid top D800/850	until 8341...
401	82.7324.02	0G7202	Kochplatte ECO Top 1000x900 14mm	Cooking plate ECO top 1000x900 14mm	ECO top D900	until 8341...
401	82.7324.03	0G6930	Kochplatte Solid Top 1000x900 14mm	Cooking plate Solid top 1000x900 14mm	Solid top D900	until 8341...
401	82.3123.02	0G8161	Kochplatte ECO Top 800x800/850 20mm	Cooking plate ECO top 800x800/850 20mm	ECO top 4Z/D800/850	8351...
401	82.3123.03	0G8162	Kochplatte Solid Top 800x800/850 20mm	Cooking plate Solid top 800x800/850 20mm	Solid top 4Z/D800/850	8351...
401	82.3123.05	0G8131	Kochplatte ECO Top 800x800/850 20mm UL	Cooking plate ECO top 800x800/850 20mm UL	ECO top 4Z/D800/850 for USA	8351...
401	82.3123.06	0G8164	Kochplatte Solid Top 800x800/850 20mm UL	Cooking plate Solid top 800x800/850 20mm UL	Solid top 4Z/D800/850 for USA	8351...
401	82.3124.02	0G8166	Kochplatte ECO Top 1000x900 20mm	Cooking plate ECO top 1000x900 20mm	ECO top 4Z/D900	8351...
401	82.3124.03	0G8167	Kochplatte Solid Top 1000x900 20mm	Cooking plate Solid top 1000x900 20mm	Solid top 4Z/D900	8351...
401	82.3124.05	0G8169	Kochplatte ECO Top 1000x900 20mm UL	Cooking plate ECO top 1000x900 20mm UL	ECO top 4Z/D900 for USA	8351...
401	82.3124.06	0G8170	Kochplatte Solid Top 1000x900 20mm UL	Cooking plate Solid top 1000x900 20mm UL	Solid top 4Z/D900 for USA	8351...
401	82.7589.02	0G8178	Kochplatte KPL ECO Top 800x800/850 20mm	Cooking plate CPL ECO top 800x800/850 20mm	ECO top 4Z/D800/850	8351...
401	82.7589.03	0G8179	Kochplatte KPL Solid Top 800x800/850 20mm	Cooking plate CPL Solid top 800x800/850 20mm	Solid top 4Z/D800/850	8351...
401	82.7584.02	0G8052	Kochplatte KPL ECO Top 1000x900 20mm	Cooking plate CPL ECO Top 1000x900 20mm	ECO top 4Z/D900	8351...
401	82.7584.03	0G8051	Kochplatte KPL Solid Top 1000x900 20mm	Cooking plate CPL ECO top 1000x900 20mm	Solid top 4Z/D900	8351...
402	82.7464	0C2496	Dichtband (klebend)	Sealing strip	all types	
403	82.7551	0G7755	Dichtband Platte	Sealing strip plate	all types	until 8381...
403	82.7611	0G8506	Dichtband Platte	Sealing strip plate	all types	8391...
404	82.7166.02	0G6252	Heizelement 1kW 230V	Heating element 1kW 230V	Standard 4Z/D900	
404	82.7166.07	0G6951	Heizelement 1kW 440V (Marine)	Heating element 1kW 440V (marine)	Marine 4Z/D900	
405	82.7257.02	0G6251	Heizelement 3kW 230V	Heating element 3kW 230V	Standard 4Z/D900	
405	82.7257.07	0G6952	Heizelement 3kW 440V (Marine)	Heating element 3kW 440V (marine)	Marine 4Z/D900	
406	82.2232	0G7203	Heizungshalter längs 800	Heating element support lengthwise	D800/850	
406	82.2188	0G7204	Heizungshalter längs 1000	Heating element support lengthwise	D900	
407	82.2231	0G7205	Heizungshalter quer 800	Heating element support crosswise	D800/850	
407	82.2187	0G7206	Heizungshalter quer 1000	Heating element support crosswise	D900	
408	82.2233	0G7207	Strahlungsblech 800	Radiation sheet 800	D800/850	until 0222...
408	82.3227	0G8850	Strahlungsblech 800	Radiation sheet 800	D800/850	0230...
408	82.2189	0G7208	Strahlungsblech 1000	Radiation sheet 1000	D900	until 0222...
408	82.3225	0G8852	Strahlungsblech 1000	Radiation sheet 1000	D900	0230...
409	82.7307.01	0G7209	Isolation Heizelement 3kW	Insulation heating element 3kW	D800/850	until 0222...
409	82.3231	0G8849	Isolation Heizelement 800	Insulation heating element 800	D800/850	0230...
409	82.7307.02	0G7210	Isolation Heizelement 4kW	Insulation heating element 4kW	D900	until 0222...
409	82.3229	0G8853	Isolation Heizelement 1000	Insulation heating element 1000	D900	0230...
410	82.2234	0G7211	Verschalung 800	Cover sheet 800	D800/850	until 0222...
410	82.3223	0G8848	Verschalung 800	Cover sheet 800	D800/850	0230...
410	82.2190	0G7212	Verschalung 1000	Cover sheet 1000	D900	until 0222...
410	82.3221	0G8851	Verschalung 1000	Cover sheet 1000	D900	0230...
411	75.9013.04	0KE127	Fühlerschutz	Sensor protection	all types	
412	87.9045	0G5935	TC Bodenfühler rechts (blau)	TC bottom sensor right (blue)	all types	

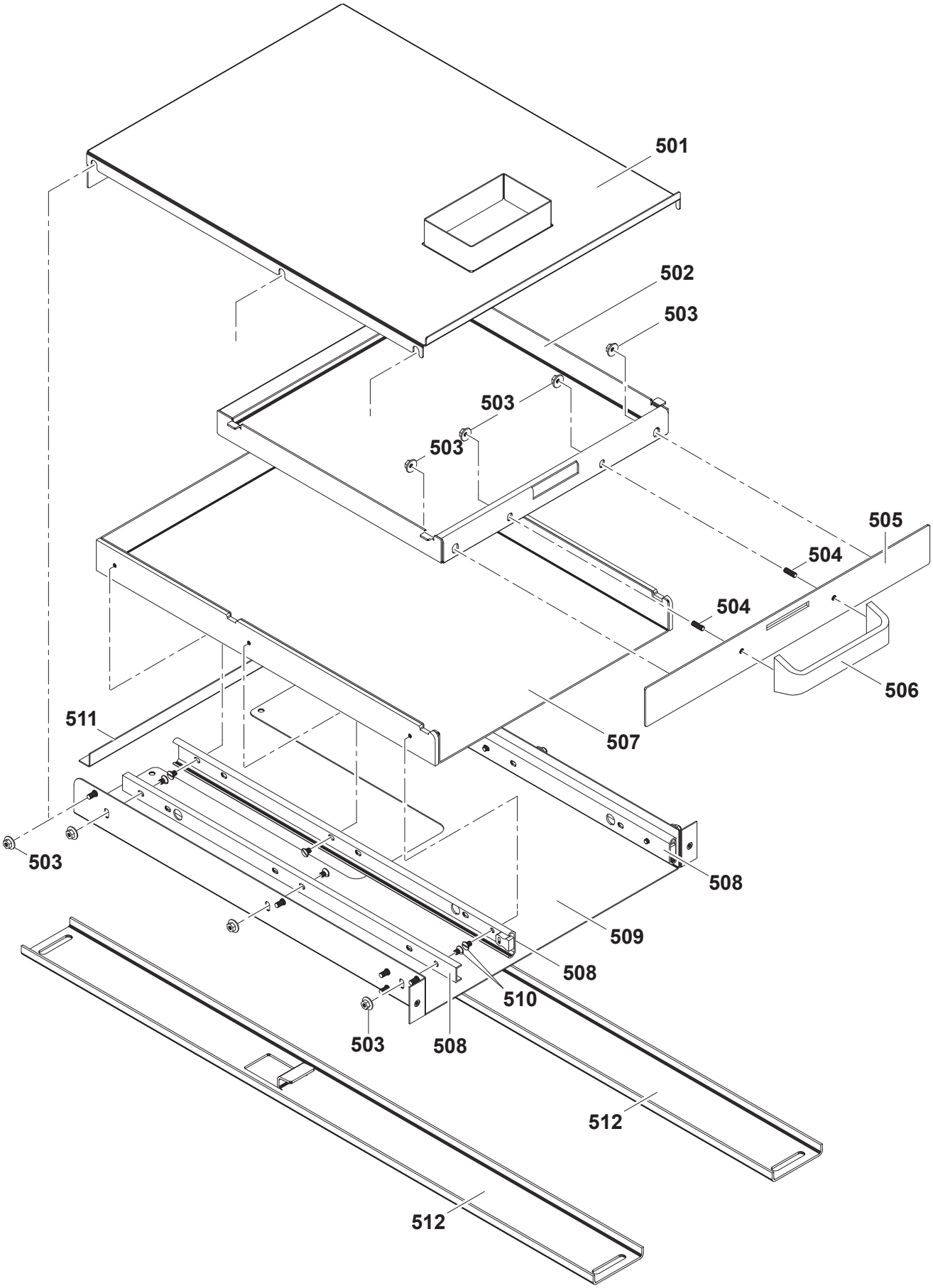

✱ Components on demand
✱ Teile auf Anfrage

5	Alias	Code	Bezeichnung	Description	Ref.	Valid from Serial N°
			Valid until 7391...			
501	82.4280.07	0G7216	Schubladenabdeckung	Drawer cover	all types	
502	82.4281.02	0G7031	Schubladeneinsatz	Drawer insert	all types	
503	712 044120.04	0G4918	Keps-Mutter M4	Keps nut M4	all types	
504	1 701 5532	0G7217	Gewindestift M4x12	Set screw M4x12	all types	
505	82.2279	0G7032	Frontblech Schublade	Front panel drawer	all types	
505	82.2941		Frontblech Schublade	Front panel drawer	all types	7011...
506	82.2209	0G7033	Griff	Handle	all types	
507	82.4284.02	0G7030	Schubladenauszug	Drawer	all types	
508	82.7201	0G6687	Führungsschiene	Rail	all types	
509	82.4279	0G7034	Schubladenschacht	Drawer support	all types	
509	82.2942		Schubladenschacht	Drawer support	all types	7011...
510	1 701 1145	0G6758	Senkkopfschraube M4x6	Countersunk screw M4x6	all types	
511	82.4373	0G7035	Verstärkung	Reinforcement	all types	
511	82.2944		Verstärkung	Reinforcement	all types	7011...
512	82.6504.03	✱	Aufhängung Schublade D800	Drawer guide D800	all D800	
512	82.6504.04	✱	Aufhängung Schublade D850	Drawer guide D850	all D850	
512	82.6504.05	✱	Aufhängung Schublade D900	Drawer guide D900	all D900	

✱ Components on demand
✱ Teile auf Anfrage

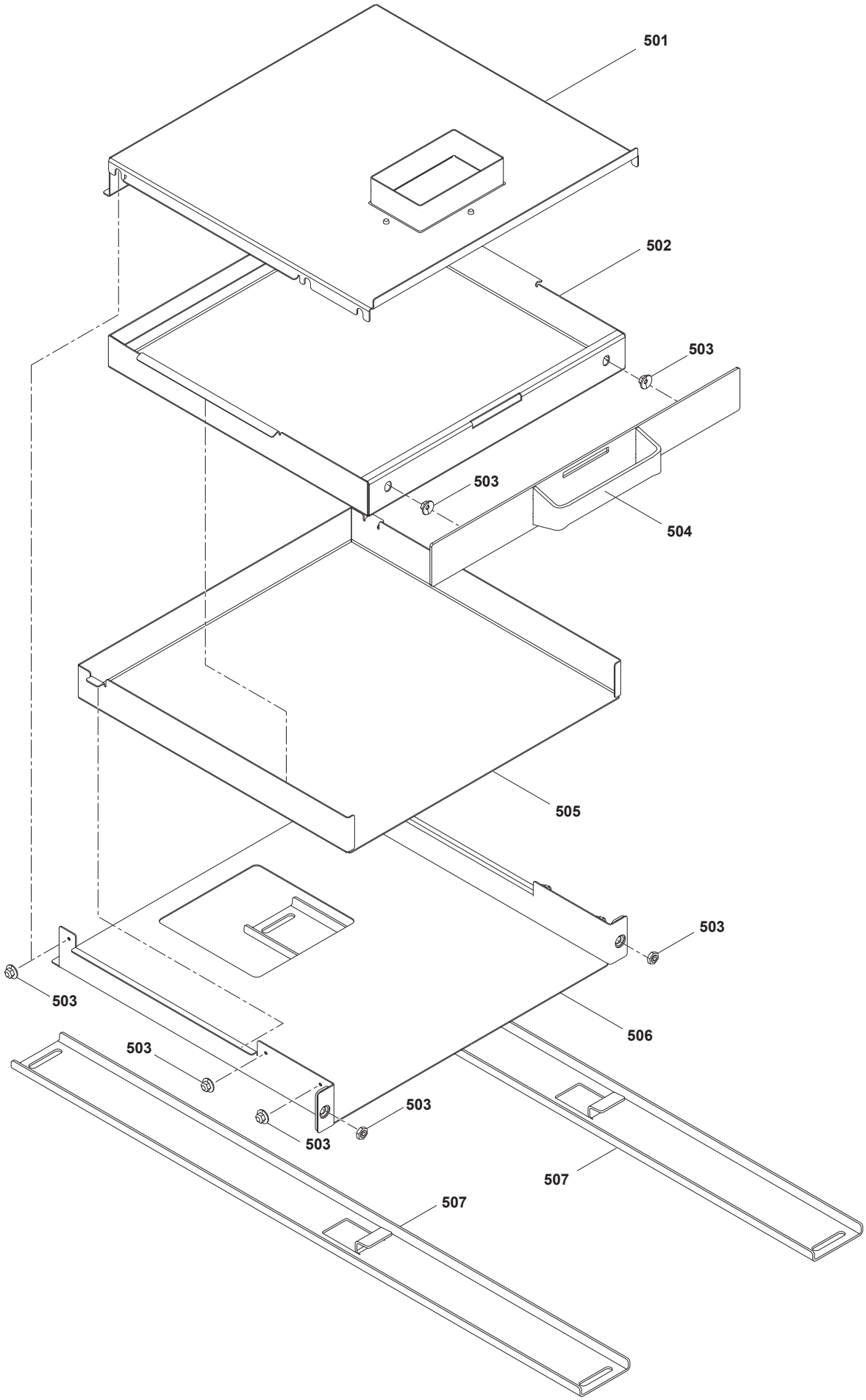

Doc. № 599A2AY00 / 82.8122.03

✱ Components on demand
✱ Teile auf Anfrage

5	Alias	Code	Bezeichnung	Description	Ref.	Valid from Serial N°
			Valid from 7401...			
501	82.2977.07	0G8234	Schubladenabdeckung	Drawer cover	D800/D900	
501	82.2977.21	0G8235	Schubladenabdeckung	Drawer cover	D850	
502	82.2973	0G8250	Schubladeneinsatz	Drawer insert		
503	712 044120.04	0G4918	Keps-Mutter M4	Keps nut M4		
504	82.2972	0G8251	Frontblech komplet	Front panel complete		
505	82.2978	0G8252	Schubladenauszug	Drawer		
506	82.2980	0G8253	Schubladenschacht	Drawer support		
507	82.6732.03	0G8257	Aufhängung Schublade	Drawer guide	D800	
507	82.6732.04	0G8245	Aufhängung Schublade	Drawer guide	D850	
507	82.6732.05	0G8246	Aufhängung Schublade	Drawer guide	D900	

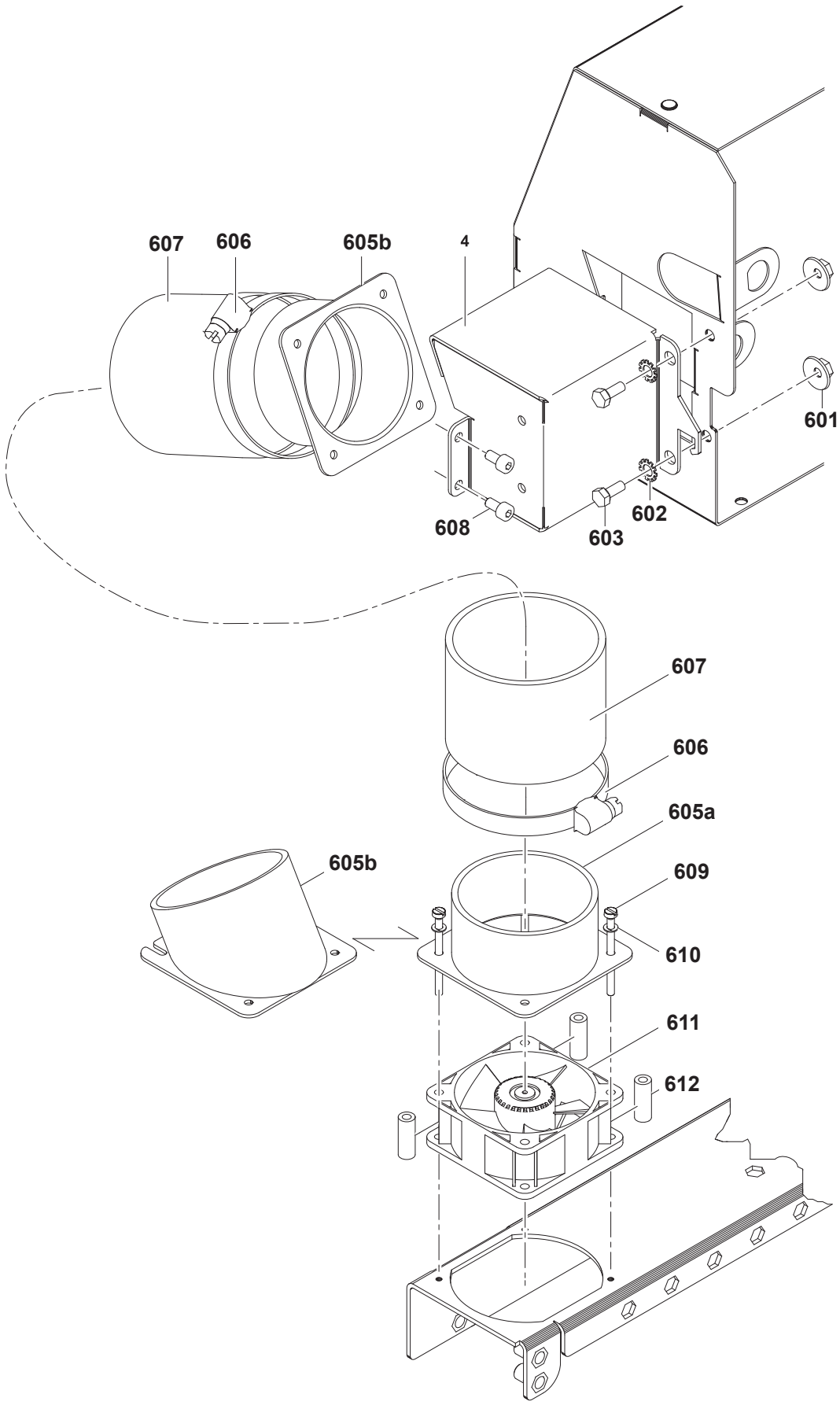

Doc. № 599A2AY00 / 82.8122.03

✱ Components on demand
✱ Teile auf Anfrage

6	Alias	Code	Bezeichnung	Description	Ref.	Valid from Serial N°
601	712 044120.05	0G3998	Kepsmutter M5	Hex nut M5	all types	
602	1 701 7002	0G2923	Fächerscheibe M5	Fan washer M5	all types	
603	1 701 2579	0G4020	Sechskantschraube M5x16	Hex bolt M5x16	all types	
604	82.3001	✱	Standardventilationsbox links	Ventilation box left	all types	
605a	82.7550.01	0G7868	Rohrstutzen gerade	Pipe socket straight	all types	
605b	82.7550.02	0G9046	Rohrstutzen schräg	Pipe socket angular	all types	
606	1 201 2209	0G7664	Schlauchschelle 50-70mm	Hose clamp 50-70mm	all types	
607	83.9010	0G6701	Alu-Flexschlauch Ø60/66	Flexible aluminium hose Ø60/66	all types	
608	1 101 8170	0G3250	Innensechskantschraube M4x8	Allen bolt M4x8	all types	
609	1 701 1083	0G5755	Zylinderschraube M3x30	Socket cap screw M3x30	all types	
610	1 701 3540	0KI478	Unterlegscheibe M3	Washer M3	all types	
611	82.7382	0G6338	Ventilator 60x60x25 622HH (1W)	Cooling fan 60x60x25 622HH (1W)	all 2-sides	
611	82.7159	0G6274	Ventilator 60x60x25 622HH (3.5W)	Cooling fan 60x60x25 622HH (3.5W)	all types	
612	82.0133	0G6755	Verstärkungsrohr Ventilator	Cooling fan support	all types	

✱ Components on demand
✱ Teile auf Anfrage

7	Oberbau	Top

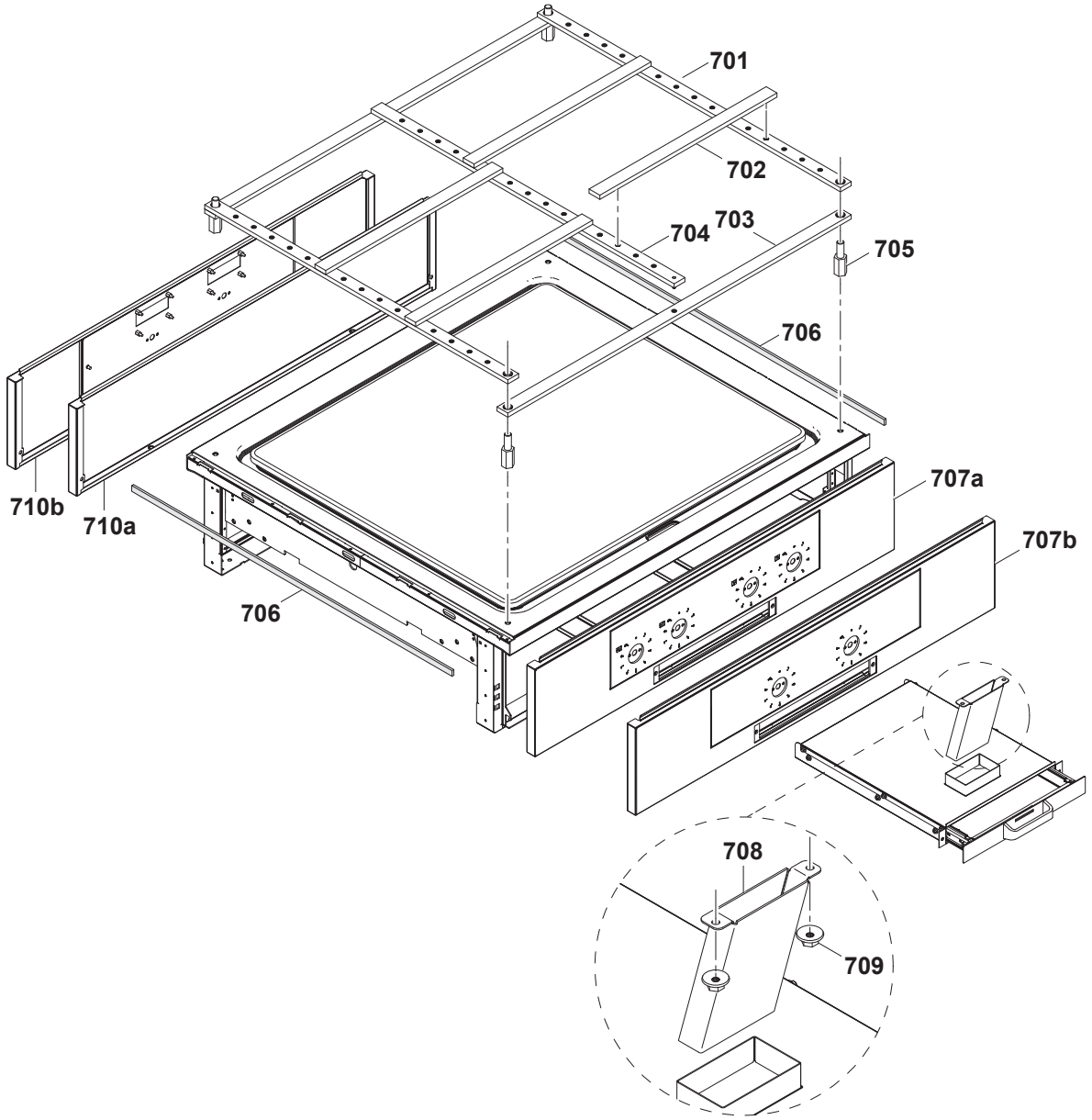

7	Alias	Code	Bezeichnung	Description	Ref.	Valid from Serial N°
701	83.3741	0G7218	Schiene-1000 15xØ8	Rolling rack-1000 15xØ8	Marine	
702	83.3744	0G7219	Schiene-1000 2xØ6	Rolling rack-1000 2xØ6	Marine	
703	83.3743	0G7220	Schiene-1000 2xØ17	Rolling rack-1000 2xØ17	Marine	
704	83.3742	0G7221	Schiene-1000 15xØ8 mittig	Rolling rack-1000 15xØ8 mittig	Marine	
705	705 040432	0G5862	Abstandsbolzen 22x80/M8	Spacer bolt 22x80/M8	Marine	
706	82.7464	0C2496	Dichtband (klebend)	Sealing strip	all types	
707a	82.1027.04	✱	Bedienblende 800 1S (Schublade)	Control panel 800 1S (drawer)	a c e g	
707a	82.1049.04	✱	Bedienb. 800 1S INOX (Schublade)	Control panel 800 1S INOX (drawer)	i j	
707a	82.1027.07	✱	Bedienblende 1000 1S (Schublade)	Control panel 1000 1S (drawer)	k m o q s u	
707b	82.1027.03	✱	Bedienblende 800 2S (Schublade)	Control panel 800 2S (drawer)	b d f h	
707b	82.1027.11	✱	Bedienblende 1000 2S (Schublade)	Control panel 1000 2S (drawer)	l n p r t v	
708	82.2684	0G7222	Ablauf	Drain	all types	
709	712 044120.04	0G4918	Keps-Mutter M4	Keps nut M4	all types	
710a	82.1000.05	✱	Blende 800	Panel 800	k m o q s u /no CB	
710a	82.1000.07	0G7445	Blende 1000	Panel 1000	l n p r t v /no C-Board	
710b	82.1027.09	✱	Bedienblende 800 2S	Control panel 800 2S	b d f h	
710b	82.1027.06	✱	Bedienblende 1000 2S	Control panel 1000 2S	l n p r t v	

Doc. № 599A2AY00 / 82.8122.03

✱ Components on demand
✱ Teile auf Anfrage

8	Reglerblende Wärmeschrank	Control panel warming cabinet

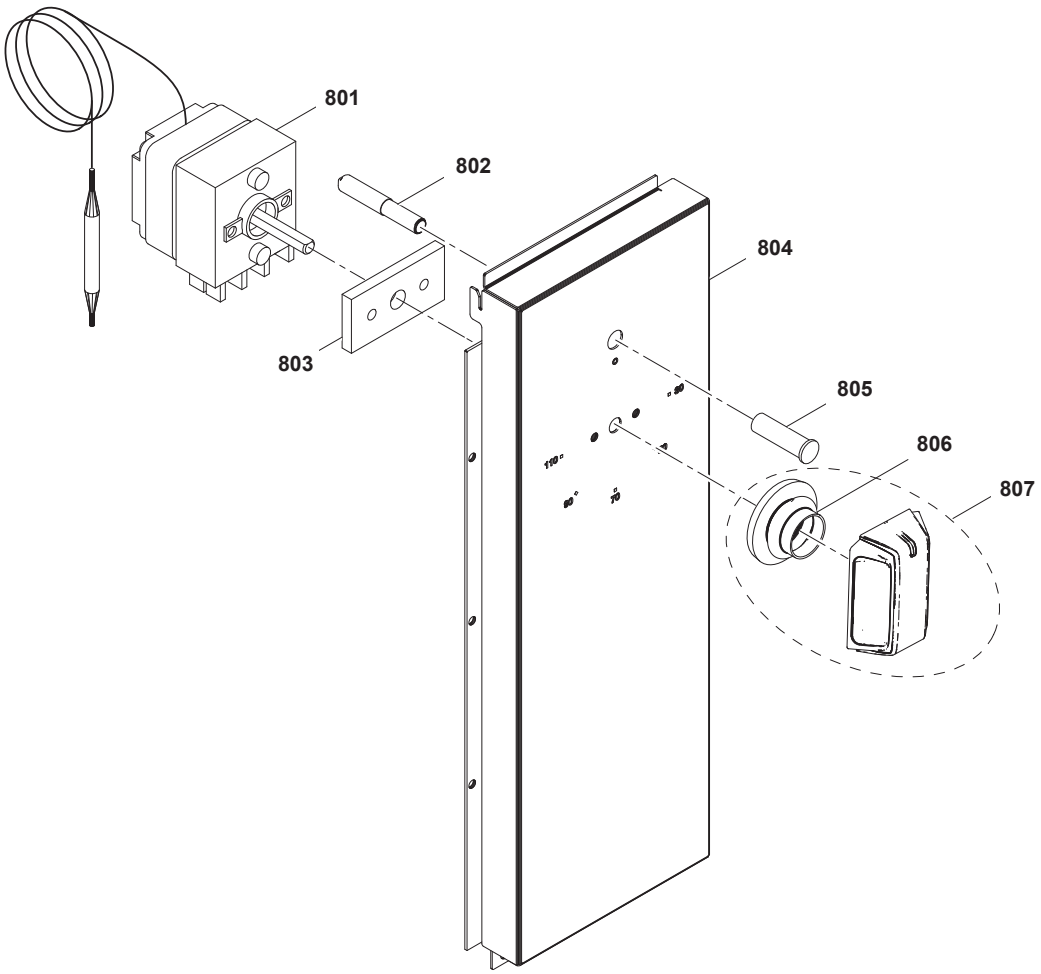

8	Alias	Code	Bezeichnung	Description	Ref.	Valid from Serial N°
801	712 344039	0K5023	Kapillarrohrregler 30-100	Capllary control 30-100	Warming cabinet	
802	72.5938.03	0KI361	Anzeigelampe klar	Indicator light, clear	Warming cabinet	
803	82.2665	0G7229	Zwischenblech	Spacer sheet		
804	82.1043.01	✱	Bedienblende warming cabinet, rechts, 130	Control panel warming cabinet, right, 130	Warming cabinet	
804	82.1043.04	✱	Bedienblende warming cabinet, rechts, 100	Control panel warming cabinet, right, 100	Warming cabinet	
805	72.5938.07	0KI363	Einsteckfassung klar Ø10mm	Lamp holder, clear, Ø10mm	Warming cabinet	
806	82.7009	0G6247	Dichtung Drehgriff	Sealing for hande	Warming cabinet	
806	82.7628	0G8603	Dichtung Drehgriff	Sealing for hande	Colored M2M	
807	82.6637.02	0G7694	Drehgriff Kpl.	Handle complete kit	Warming cabinet	
807	82.6638.02	0G8621	Drehgriff Kpl.	Handle complete kit	Colored M2M	
	62.1544.01	0G7399	Kabelbaum: Wärmeschrabk komplett	Wiring harness: warming cabinet	Warming cabinet	
	62.1503.02	0G7162	Verdrahtung 2X0.5X 300	Wiring 2x0.5x300	Warming cabinet	
	82.9183.01	0G7359	Kabel: WS-Qquerstromlüfter	Cable: Warming cab.-cross flow blower	Warming cabinet	

✱ Components on demand
✱ Teile auf Anfrage

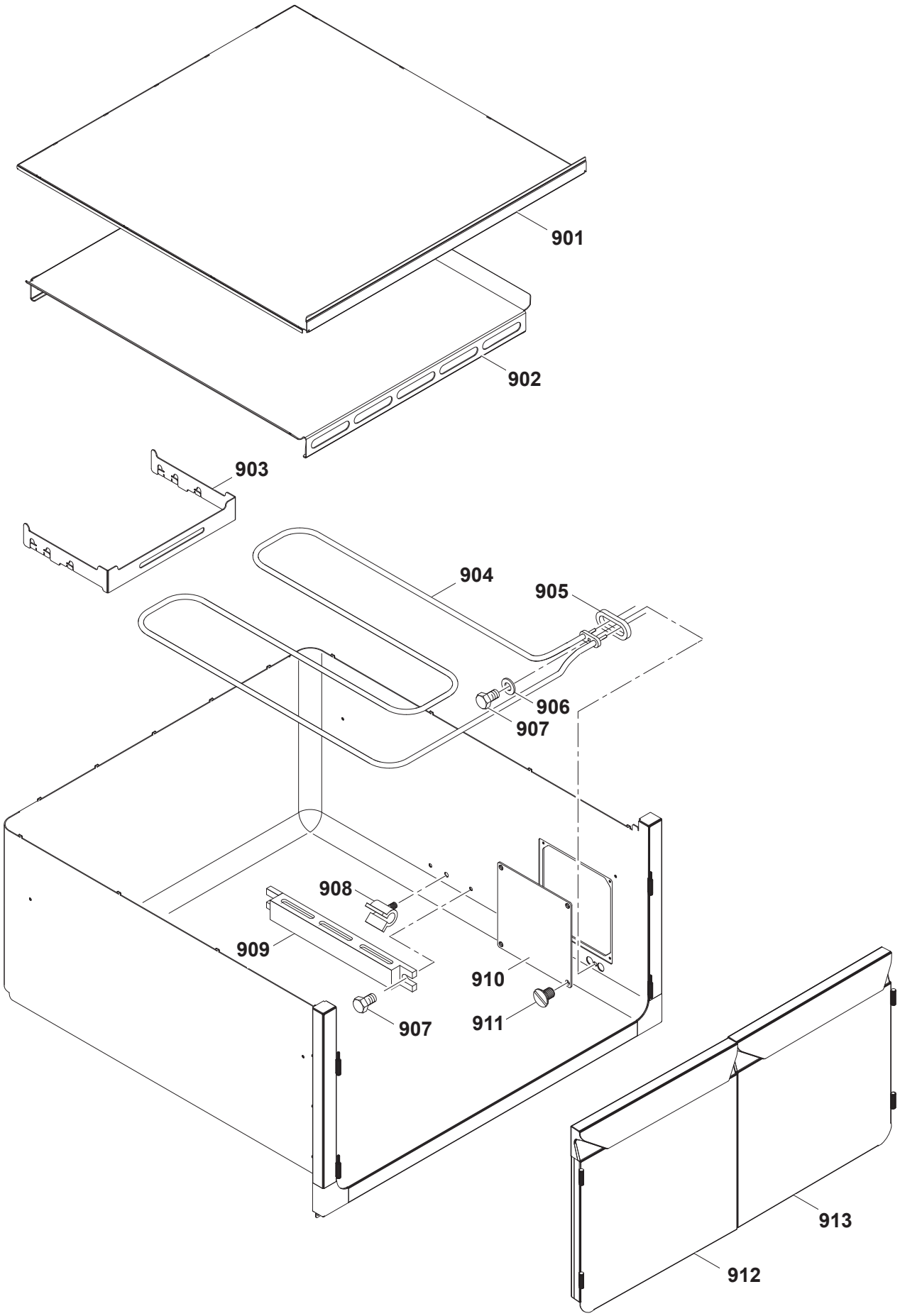

Doc. № 599A2AY00 / 82.8122.03

✱ Components on demand
✱ Teile auf Anfrage

9	Alias	Code	Bezeichnung	Description	Ref.	Valid from Serial N°
901	82.0226.03	✱	Korpusdeckel 1S 640	Corpus cover 1S 640	W800/ 1S	
901	82.0226.04	✱	Korpusdeckel 1S 740	Corpus cover 1S 740	W1000/ 1S	
901	82.0084.04	✱	Korpusdeckel 2S 640X800	Corpus cover 2S 640X800	W800/1000/ 2S/ D800	
901	82.0084.06	✱	Korpusdeckel 2S 640X900	Corpus cover 2S 640X900	W800/1000/ 2S/ D900	
902	82.2326.03	0G7402	Einlegeboden 640 1S	False bottom 640 1S	W800/ 1S	
902	82.0195.04	0G7403	Einlegeboden 640 2S 900	False bottom 640 2S 900	W800/ 2S	
902	82.0195.02	0G7404	Einlegeboden 740 2S 900	False bottom 740 2S 900	W1000/ 2S	
902	82.2813.01	0G7405	Einlegeboden 740 1S	False bottom 740 1S	W1000/ 1S	
902	82.3063.03		Einlegeboden 640x800	False bottom 640x800	W800	
902	82.3063.05		Einlegeboden 740x900	False bottom 740x900	W1000 / 2S	
902	82.3063.06		Einlegeboden 740x800	False bottom 740x800	W1000 / 1S	
903	62.4208	0G7406	Halter Heizung	Heating element support	W800/1000	
904	62.4082	0G2911	Heizung 2000W /400V	Heating element 2000W /400V	W800/1000	
905	72.1120	0K4989	Dichtung 44x20x3	Sealing 44x20x3	all types	
906	1 701 7002	0G2923	Fächerscheibe M5	Fan washer M5	all types	
907	1 701 2579	0G4020	Sechslantschraube M5x16	Hex bolt M5x12	all types	
908	1 201 2020	0G7345	Fühlerbefestigung	Sensor fixation	all types	
909	72.6251	0G7346	Fühlerschutz	Sensor protection	all types	
910	82.0223.01	0G6757	Deckel Servicefenster	Lid service cover	all types	
911	1 701 1145	0G6758	Senkkopfschraube M4x6	Countersunk screw M4x6	all types	
912	82.0303.14	0G8479	Tür, doppelt, NHC, 290, links	Door, couple, NHC, 290, left	W800 NHC	
912	82.0303.05	0G8040	Tür, doppelt, NHC, 340, links	Door, couple, NHC, 340, left	W1000 NHC	
912	82.0303.02	0G8628	Tür, doppelt, 290, links	Door, couple, 290, left	W800 1S/2S H2	
912	82.0303.09	0G8509	Tür, doppelt, 340, links	Door, couple, 340, left	W1000 1S/2S H2	
913	82.0303.15	0G8631	Tür, doppelt, NHC, 290, rechts	Door, couple, NHC, 290, right	W800 NHC	
913	82.0303.06	0G8630	Tür, doppelt, NHC, 340, rechts	Door, couple, NHC, 340, right	W1000 NHC	
913	82.0303.04	0G8629	Tür, doppelt, 290, rechts	Door, couple, 290, right	W800 1S/2S H2	
913	82.0303.10	0G8508	Tür, doppelt, 340, rechts	Door, couple, 340, right	W1000 1S/2S H2	

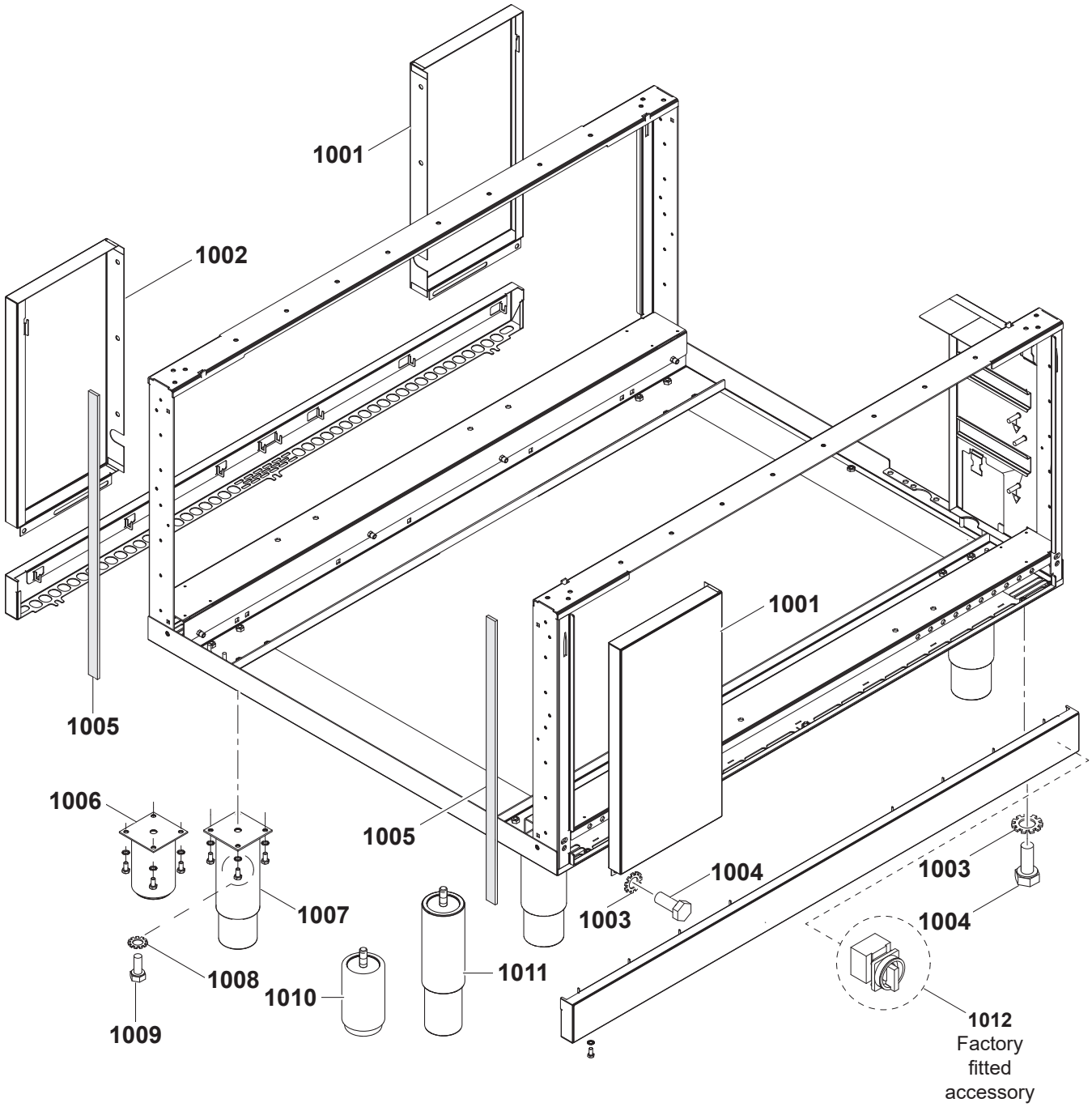

✱ Components on demand
✱ Teile auf Anfrage

10	Alias	Code	Bezeichnung	Description	Ref.	Valid from Serial N°
1001	82.1041.01	✱	Korpusabdeckung, rechts, 130	Cover panel, right 130	W800/1000 2S	
1002	82.1042.01	✱	Korpusabdeckung, links, 130	Cover panel, left 130	W800/1000	
1002	82.1042.11	✱	Korpusabdeckung, links, 160	Cover panel, left 160	W800 2S	
1003	1 701 7002	0G2923	Fächerscheibe M5	Fan washer M5	all types	
1004	1 701 2579	0G4020	Sechskantschraube M5x16	Hex bolt M5x16	all types	
1005	82.7467	0C7307	Dichtung 5mm	Sealing sides 5mm	all types	5101...
1006	86.2385	0G6140	Stellfuß 2" 100mm	Adjustable feet 2" 100mm	H550	
1007	86.0001	0G5391	Stellfuß 2" 145-252mm rund	Adjustable feet 2" 145-252mm, round	H450	
1008	1 701 5051	0G6753	Fächerscheibe M6	Fan washer M6	H450/550	
1009	1 701 2600	0KT919	Sechskantschraube M6x12	Hex bolt M6x12	H450/550	
1010	82.0350.02	0G7957	Fuss M10 100mm	Foot M10 100mm	H550	7141...
1011	82.0350.01	0G7958	Fuss M10 200mm	Foot M10 200mm	H450	7141...
1012	76.9164.02	0K4979	Hauptschalter 63A	Main switch 63A	H550	8041...

✱ Components on demand
✱ Teile auf Anfrage

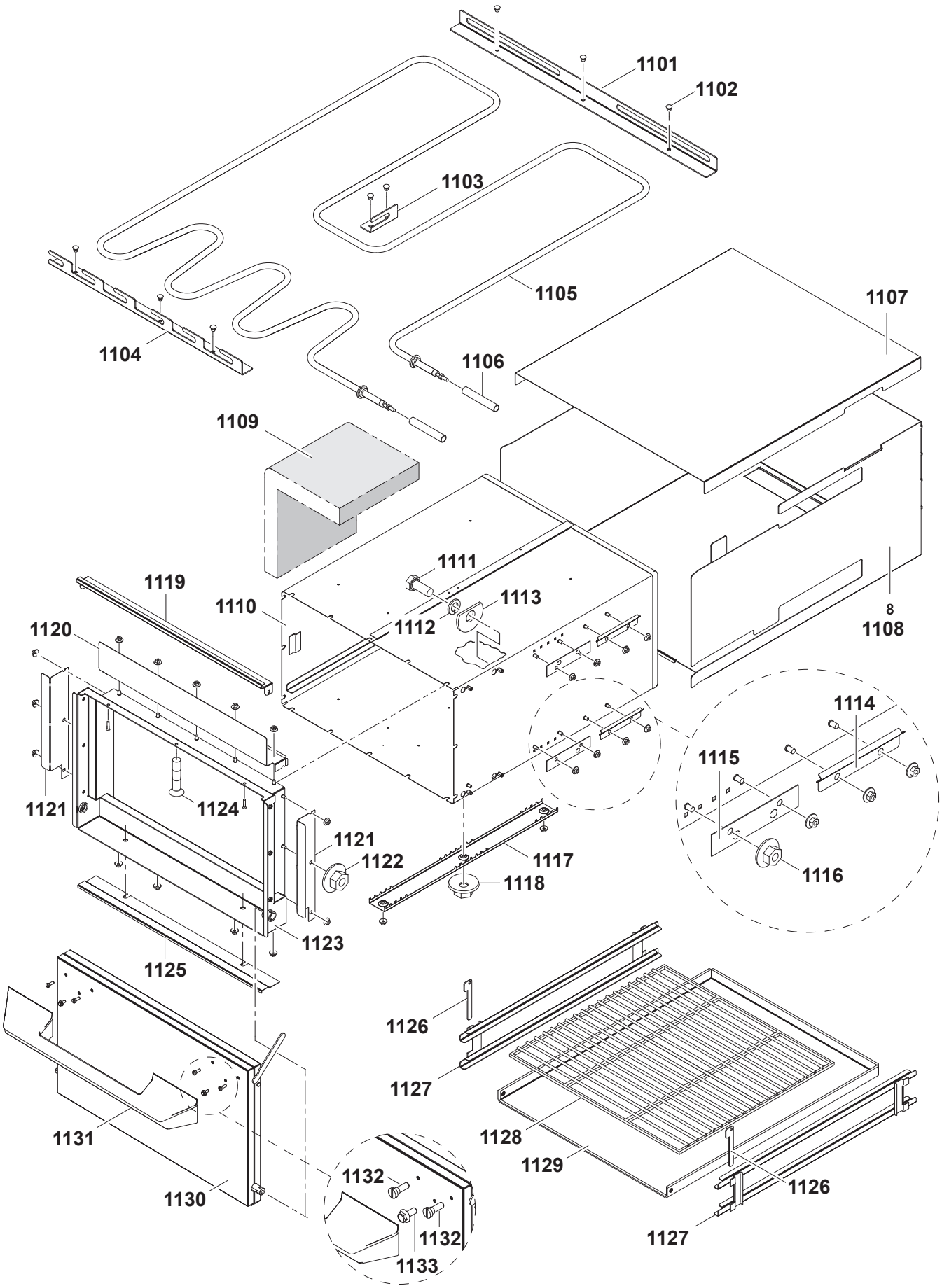

Doc. № 599A2AY00 / 82.8122.03

✱ Components on demand
✱ Teile auf Anfrage

11	Alias	Code	Bezeichnung	Description	Ref.	Valid from Serial N°
1101	72.6609	0T2542	Halter Heizung hinten	Heating element support backside	all types	
1102	1 701 1102	0G6411	Niete 4x7.3	Rivet 4x7.3	all types	
1103	72.6610	0T2543	Halter Heizung mittig	Heating element support middle	all types	
1104	72.6613	0T2544	Halter heizung vorn	Heating element support frontside	all types	
1105	72.5054.03	0KI360	Heizung 2.5kW 400V	Heating elemtent 2.5kW 400V	all Standard	
1105	72.5054.05	0G2987	Heizung 2.5kW 440V	Heating elemtent 2.5kW 440V	all Marine	
1106	1 115 1281	0K4567	Isolierschlauch Ø14	Insulation tube Ø14	all types	
1106	1 115 1280	0T0571	Isolierschlauch Ø10	Insulation tube Ø10		
1107	82.1157.03	✱	Deckel Ofenverkleidung D800	Lid oven cover D800	D800	
1107	82.1157.01	✱	Deckel Ofenverkleidung D850	Lid oven cover D850	D850	
1107	82.1157.02	✱	Deckel Ofenverkleidung D900	Lid oven cover D900	D900	
1108	82.1156.03	✱	Unterteil Ofenverkleidung 1S/D800	Bottom oven cover 1S/D800	1-side/D800	
1108	82.1156.01	✱	Unterteil Ofenverkleidung 1S/D850	Bottom oven cover 1S/D850	1-side/D850	
1108	82.1156.02	✱	Unterteil Ofenverkleidung 1S/D900	Bottom oven cover 1S/D900	1-side/D900	
1108	82.1160.03	✱	Unterteil Ofenverkleidung 2S/D800	Bottom oven cover 2S/D800	2-sides/D800	
1108	82.1160.02	✱	Unterteil Ofenverkleidung 2S/D900	Bottom oven cover 2S/D900	2-sides/D900	
1109	72.0807	0K4265	Isolation	Insulation	2-sides	
1109	72.0746.01	0K6341	Isolation	Insulation	1-side	
1110	72.9794	✱	Mantel Elektrobackofen	Mantle electric oven	all types	
1111	1 701 2509	0K4598	Sechskantschraube M5x12	Hex bolt M5x12	all types	
1112	1 701 5048	0H9734	Federring M5	Spring washer M5	all types	
1113	719 040166	0G3052	Heizkörperscheibe	Disc	all types	
1114	82.2520	0G7223	STB Halter	Safety thermostat support	all types	
1115	719 040247	0K8882	Fühlerhalter	Sensor support	all types	
1116	712 044120.06	0G3997	Keps-Mutter M6	Keps nut M6	all types	
1117	72.0744	0K4263	Isolationsbefestigung	Insulation fixation	all types	
1118	712 044120.06	0G3997	Keps-Mutter M6	Keps nut M6	all types	
1119	83.3048	✱	Abdeckprofil oben	Cover profile	all types	
1120	82.2309	✱	Klemmblech oben	Clamp sheet top	all types	
1121	72.9822.02	✱	Klemmblech links/rechts	Clamp sheet left/right	all types	
1122	712 044120.06	0G3997	Keps-Mutter M6	Keps nut M6	all types	
1123	83.3044	✱	Frontrahmen Backofen	Frontal frame oven	all types	
1124	GR40 186.1	0G3575	Flachkopfschraube M6x15	Flat head screw M6x15	all types	
1125	83.3047	✱	Abdeckprofil unten	Cover profile bottom	all types	
1126	719 040244	0K5604	Arretierung Rostführung	Locking for grill rail	all types	
1127	62.6197	0G6435	Rostführung Backofen 2/1GN	Grill rail 2/1GN	all types	
1128	1 110 1300	0K6412	Grillrost 2/1GN	Grill 2/1GN	all types	
1129	719 830045	0K8889	Einlegeplatte 2-seitig	Bottom plate 2-sides	2-sides	
1129	719 830077.01	0K8892	Einlegeplatte 1-seitig	Bottom plate 1-sides	1-side	
1130	83.3450	0G6666	Backofentür komplett	Oven door complete	all types	
1131	82.6500	0G7224	Handgriff Backofen	oven handle	all types	
1132	82.7352	093923	Schraube M5x12	Screw M5x12	all types	
1133	82.7567	0C7119	Sicherungsschraube M5x16	Locking screw M5x16	all types	

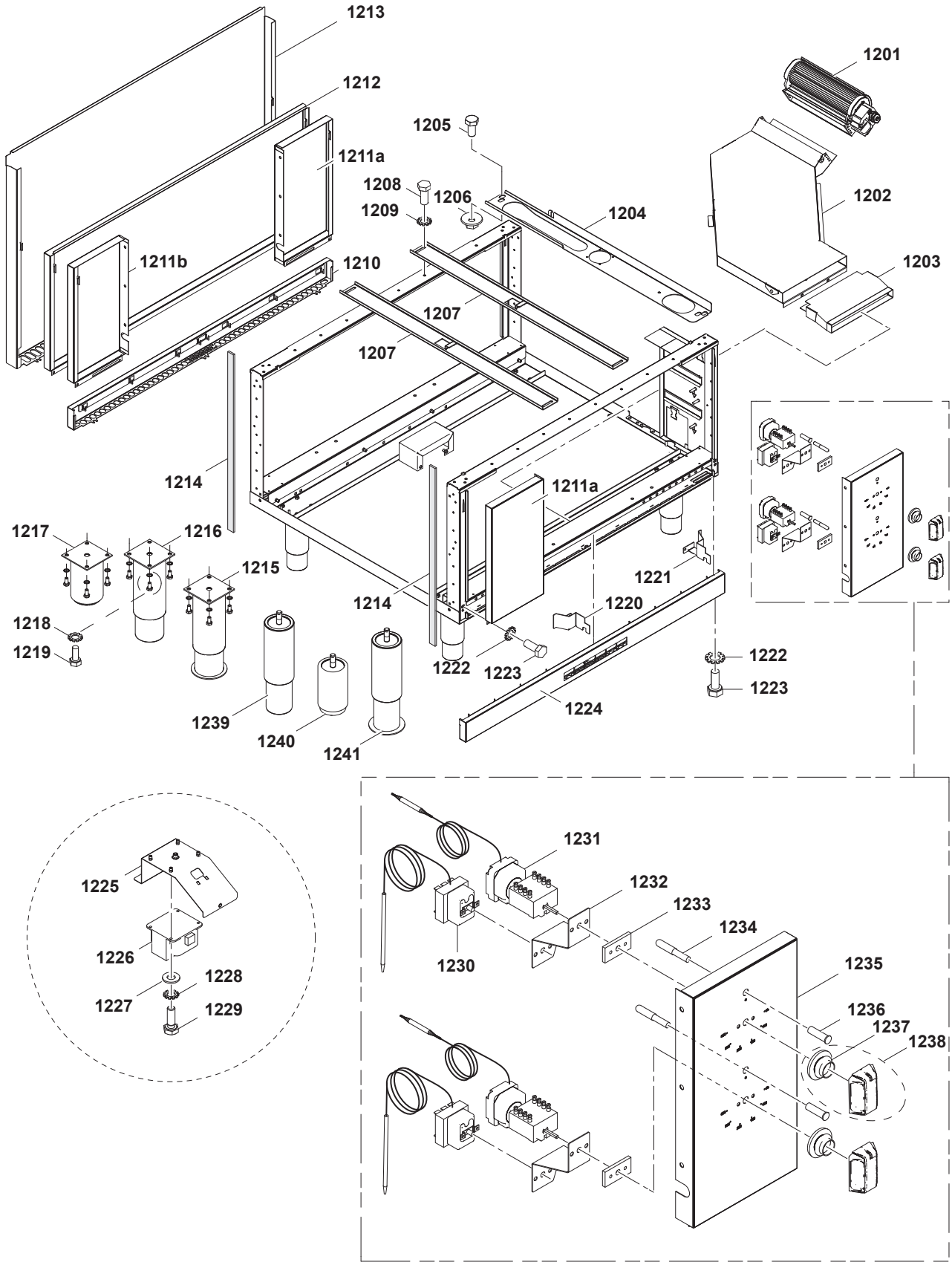

Doc. № 599A2AY00 / 82.8122.03

✱ Components on demand
✱ Teile auf Anfrage

12	Alias	Code	Bezeichnung	Description	Ref.	Valid from Serial N°
1201	1 115 1416	0K5059	Querstromlüfter	Cross flow blower	all types	
1202	82.5201.008	✱	Luftkanal Ofen 800x800	Air channel oven 800x800	D800	
1202	82.5202.008	✱	Luftkanal Ofen 800x850	Air channel oven 800x850	D850	
1202	82.5203.010	✱	Luftkanal Ofen 1000x900	Air channel oven 1000x900	D900	
1203	82.1184	✱	Kanalverlängerung vorn	Channel extension frontside	all types	
1203	82.1200.01	✱	Kanalverlängerung Oberteil	Channel extension top part	all types	5451...
1203	82.1201.01	✱	Kanalverlängerung Unterteil	Channel extension bottom part	all types	5451...
1204	82.3040.01	✱	Schiene Spatabox D800	Guide track D800	D800	
1204	82.3040.02	✱	Schiene Spatabox D850	Guide track D850	D850	
1204	82.3040.03	✱	Schiene Spatabox D900	Guide track D900	D900	
1205	1 701 2503	0G5490	Sechskantschraube M4x8	Hex bolt M4x8	all types	
1206	712 044120.04	0G4918	Kep-Mutter M4	Keps nut M4	all types	
1207	82.6504.03	✱	Aufhängung Schublade D800	Drawer guide D800	all D800	
1207	82.6504.04	✱	Aufhängung Schublade D850	Drawer guide D850	all D850	
1207	82.6504.05	✱	Aufhängung Schublade D900	Drawer guide D900	all D900	
1208	1 701 2579	0G4020	Sechskantschraube M5x16	Hex bolt M5x16	all types	
1209	1 701 7002	0G2923	Fächerscheibe M5	Fan washer M5	all types	
1210	82.1140.08	0G7288	Anschlussdeckel H66/L800	Bottom front panel H66/L800	H700/D800 no C-Board	
1210	82.1140.28	✱	Anschlussdeckel H166/L800	Bottom front panel H166/L800	H800/D800 no C-Board	
1210	82.1140.10	0G7901	Anschlussdeckel H66/L1000	Bottom front panel H66/L1000	H700/D900 no C-Board	
1210	82.1140.30	0G7792	Anschlussdeckel H166/L1000	Bottom front panel H166/L1000	H800/D900 no C-Board	
1211a	82.1046.11	✱	Ofenblende 76mm links	Oven panel 76mm links	D800/850	
1211a	82.1046.01	✱	Ofenblende 201mm links	Oven panel 201mm links	D900	
1211a	82.1046.09	✱	Ofenblende 126mm links	Oven panel 126mm links	all 2-Sides	
1211b	82.1046.02	✱	Ofenblende 76 rechts	Oven panel 76 rechts	2-Sides/D800	
1211b	82.1046.12	✱	Ofenblende 201 rechts	Oven panel 201 rechts	2-Sides/D900	
1212	82.1102.07	0G7286	Rückwand 800x700	Back panel 800x700	a c /no C-Board	
1212	82.1102.27	✱	Rückwand 800x800	Back panel 800x800	e g /no C-Board	
1212	82.1102.09	✱	Rückwand 1000x700	Back panel 1000x700	k m s u /no C-Board	
1212	82.1102.29	✱	Rückwand 1000x800	Back panel 1000x800	o q /no C-Board	
1213	82.1007.07	✱	Rückwand C-Board 800x700	Back panel C-Board 800x700	a c i j /C-Board	
1213	82.1007.27	✱	Rückwand C-Board 800x800	Back panel C-Board 800x800	e g /C-Board	
1213	82.1007.09	✱	Rückwand C-Board 1000x700	Back panel C-Board 1000x700	k m /C-Board	
1213	82.1007.29	✱	Rückwand C-Board 1000x800	Back panel C-Board 1000x800	o q /C-Board	
1214	82.7467	0C7307	Dichtung 5mm	Sealing sides 5mm	H700/800	5101...
1215	83.3728	0G6886	Stellfuß 2" Marine 145-252mm	Adjustable feet 2" Marine 145-252mm	H700 Marine	
1216	86.0001	0G5391	Stellfuß 2" 145-252mm rund	Adjustable feet 2" 145-252mm, round	H700	
1217	86.2385	0G6140	Stellfuß 2" 100mm	Adjustable feet 2" 100mm	H800	
1218	1 701 5051	0G6753	Fächerscheibe M6	Fan washer M6	H700/800	
1219	1 701 2600	0KT919	Sechskantschraube M6x12	Hex bolt M6x12	H700/800	
1220	82.0113.01	0G7386	Leitblech H700 links	Aeration sheet left H700	H700	
1220	82.0113.11	0G7387	Leitblech H800 links	Aeration sheet left H800	H800	
1221	82.0113.02	0G7385	Leitblech H700 rechts	Aeration sheet right H700	H700	
1221	82.0113.12	0G7388	Leitblech H800 rechts	Aeration sheet right H800	H800	
1222	1 701 7002	0G2923	Fächerscheibe M5	Fan washer M5	H700/800	
1223	1 701 2579	0G4020	Sechskantschraube M5x16	Hex bolt M5x16	H700/800	
1224	82.1178.08	0G7225	Anschlussdeckel (Lüftung) H66/L800	Bottom front panel (aeration) H66/L800	H700/D800	
1224	82.1178.28	0G7226	Anschlussdecke (Lüftung) H166/L800	Bottom front panel (aeration) H166/L800	H800/D800	
1224	82.1178.10	0G6681	Anschlussdeckel (Lüftung) H66/L1000	Bottom front panel (aeration) H66/L1000	H700/D900	
1224	82.1178.30	0G7227	Anschlussdeckel (Lüftung) H166/L1000	Bottom front panel (aeration) H166/L1000	H800/D900	
1225	82.3029	0G7057	Halteblech	Metal support	all Marine	
1226	82.9209	006710	Autotransformer 0-240-400-440V-150VA	Autotransformer 0-240-400-440V-150VA	all Marine	
1227	1 701 3502	0G3595	Unterlegscheibe M4	Washer M4	all Marine	
1228	1 701 7060	0G8920	Fächerscheibe M4	Fan washer M4	all Marine	
1229	1 701 2629	0G5854	Sechskantschraube M4x12	Hex bolt M4x12	all Marine	
1230	82.9053	004269	Sicherheitsthermostat 360°C-25K	Safety thermostat 360°C-25K	all types	

12	Alias	Code	Bezeichnung	Description	Ref.	Valid from Serial N°
1231	82.9120	0G6318	Schalter off - lin 3/4 + Regler 280°C	Switch off - lin 3/4 + control 280°C	all types	
1232	82.6524	0G7228	Montagewinkel	Mounting angle	all types	
1233	82.2665	0G7229	Zwischenblech	Spacer plate	all types	
1234	72.5938.03	0KI361	Anzeigelampe klar	Indicator light, clear	all types	
1235	82.1120.04	✱	Reglerblende Ofen 126mm (°C)	Control panel oven 126mm (°C)	D800/850	
1235	82.1120.03	✱	Reglerblende Ofen 201mm (°C)	Control panel oven 201mm (°C)	D900	
1236	72.5938.07	0KI363	Einsteckfassung klar Ø10mm	Lamp holder, clear, Ø10mm	all types	
1237	82.7009	0G6247	Dichtung Drehgriff	Sealing for hande	all types	
1237	82.7628	0G8603	Dichtung Drehgriff	Sealing for hande	colored M2M	
1238	82.6637.01	0G7693	Drehgriff Kpl.	Handle complete kit	all types	
1238	82.6638.01	0G8620	Drehgriff Kpl.	Handle complete kit	colored M2M	
1239	82.0350.01	0G7958	Fuss M10 200mm	Foot M10 200mm	H700	7141...
1240	82.0350.02	0G7957	Fuss M10 100mm	Foot M10 100mm	H800	7141...
1241	82.0350.03	0G9239	Fuss M10 200mm Marine	Foot M10 200mm Marine	H700 Marine	7141...
1241	82.9203	0G6950	Kabelbaum: Ofen 1-seitig Marine	Wiring harness: oven 1-side Marine	all Marine	
1241	82.9104	0G7389	Kabel: X0 - Schalter - 5+6 (Ofen)	Cable: X0 - switch - 5+6 (oven)	all types	
1241	82.9071.01	0G7390	Kabel: Schalter R5-STB1-E5 H5 (Ofen)	Cable: switch R5-STB1-E5 H5 (oven)	all types	
1241	82.9071.02	0G7391	Kabel: Schalter R6-STB2-E6 H6 (Ofen)	Cable: switch R6-STB2-E6 H6 (oven)	all types	
1241	82.9132.01	0G7278	Kabel: Ofen - Querstromlüfter groß	Cable: oven - cross flow blower large	all types	

✱ Components on demand
✱ Teile auf Anfrage