TR300

PNC	Model	Modules	Description	Note
602068	TR300	**A**	VEGETABLE SLICER - MOTOR UNIT - WITH EJECTOR - 3 220-240/380-415V 50HZ	
602069	TR300	**B**	VEGETABLE SLICER - MOTOR UNIT - WITH EJECTOR - 3 220-240/380-415V 50HZ	

TR300

Modules classifications

A	DITO SAMA
B	ELECTROLUX PROFESSIONAL

Pag.	Index
4	Exploded view - Body/Mechanism
5	Parts list - Body/Mechanism
10	Exploded view - Stand
11	Parts list - Stand
12	Exploded view - Automatic hopper
13	Parts list - Automatic hopper
14	Exploded view - French Fries Accessories
15	Parts list - French Fries Accessories
16	Exploded view - Long Vegetable Hopper
17	Parts list - Long Vegetable Hopper

TR300 - Exploded view - Body/Mechanism

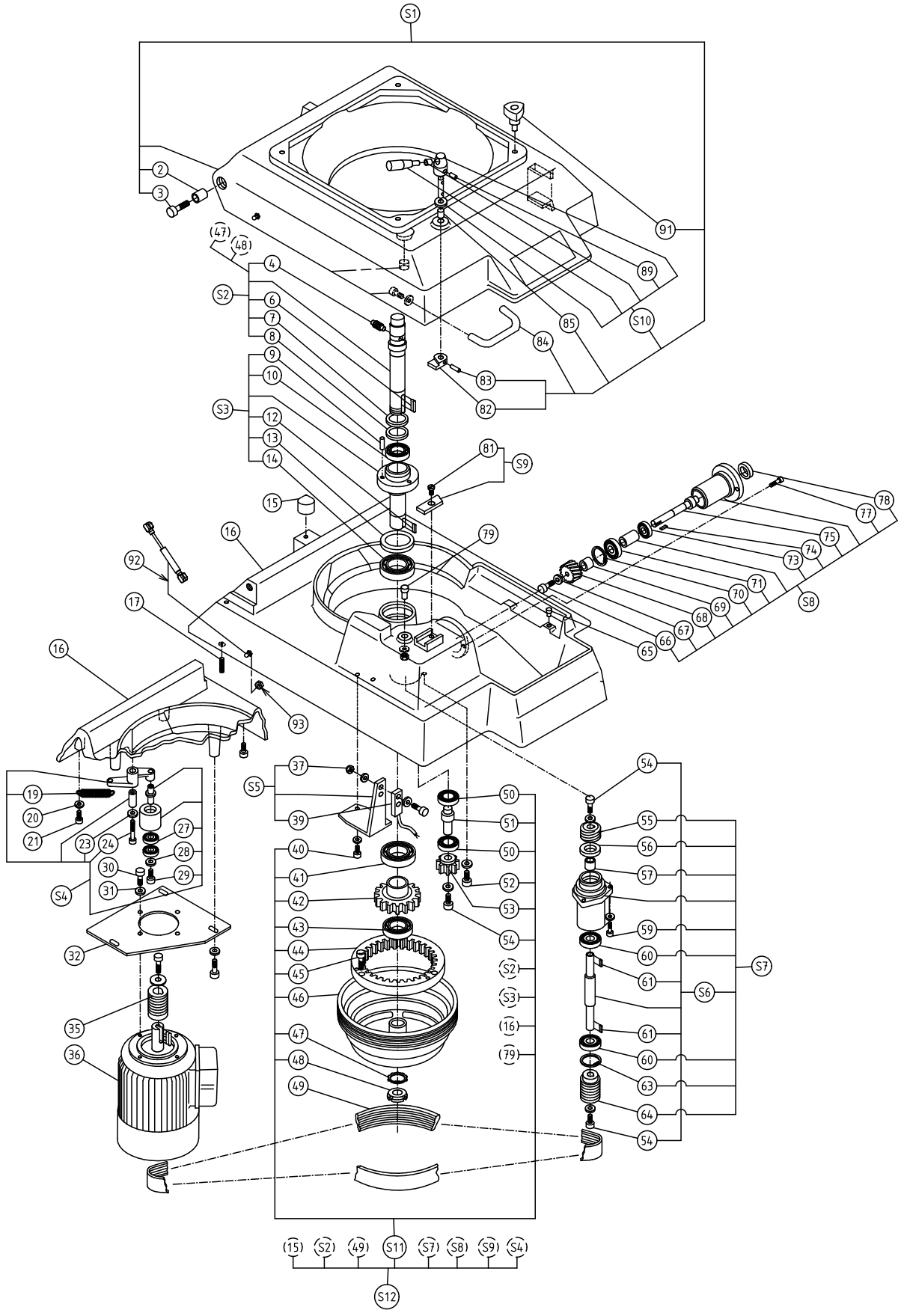

Pos.	Code	Description	V	W&T	Ref.	Notes	S/N break
2	0D3732	Nickel plated pivot					
3	0D2331	Screw TH M12x45 stainless steel (set x 5)					
4	0KQ697	Knurled pin					
6	0HD007	Key A 5x5x36 (set x 5)					
7	0D6442	Washer 54x25x2.5					
8	0D1006	Lipped seal 25x33x6 (set x 5)					
9	0KQ210	Threaded drive piece					
10	0D1520	Conical bearing 32005		X			
10	0D1849	Lipped seal 35x48x8		X			
12	0D6573	Key C 4x4x22 (set x 5)					
13	0HD030	Double lipped seal 55x70x8		X			
14	0D0004	Bearing 6008		X			
15	0DF091	Stop					
16	0D5187	Body, packed					
17	0D0547	Threaded rod (set x 6)					
17	0D2263	Toothed washer 8 (set x 10)					
17	0D0642	Nut HU M8 stainless steel (set x 10)					
19	0KJ057	Spring					
20	0U0652	Washer M6 (set x 10)					
21	0D0499	Screw TH M6x16 stainless steel (set x 10)					
23	0KQ524	Washer M8 stainless steel (set x 10)					
24	0D2344	Screw TCHC M8x45 (set x 10)					
27	0D1123	Bearing 6201		X			
28	0D0513	Washer L 6 (set x 10)					
29	0D0617	Screw TCHC M6x16 (set x 10)					
30	0D0560	Screw TH M8x20 (set x 10)					
31	0D0626	Washer CSZ8 (set x 10)					
32	0DF346	Motor support					
35	0KQ232	Drive pulley 50HZ		X			
35	0D0781	Drive pulley 60 HZ		X			
36	0D3790	Motor assembly	X				
37	33987	Nut HU M3 stainless steel (set x 10)					
37	33986	Washer M3 (set x 10)					
37	0KQ511	Screw TC M3x16 stainless steel (set x 10)					
39	0KQ281	Proximity detector		X			
40	0D0614	Screw TC M5x12 stainless steel (set x 10)					

TR300 - Exploded view - Body/Mechanism

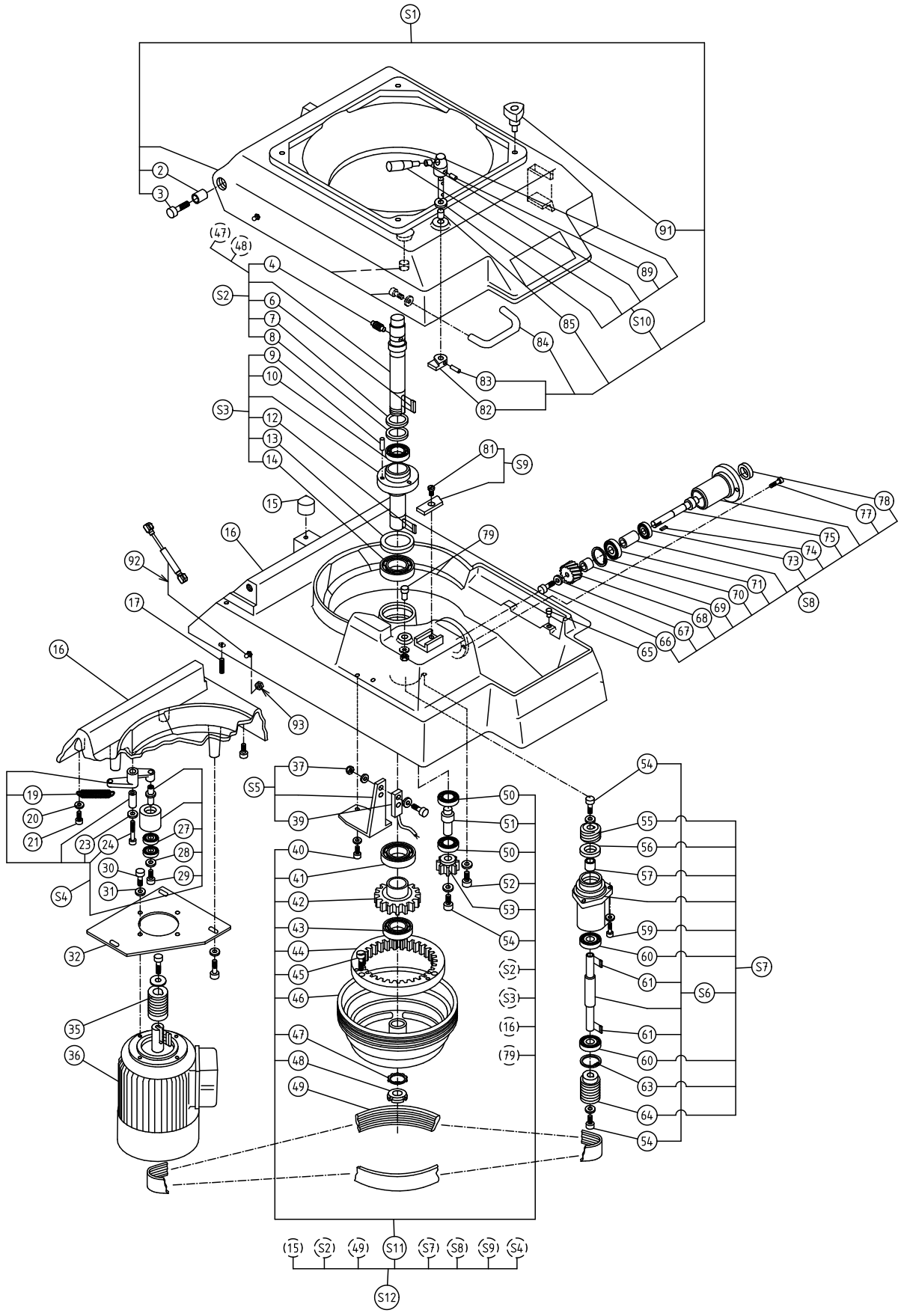

Pos.	Code	Description	V	W&T	Ref.	Notes	S/N break
40	0KQ491	Washer size 5 (set x 10)					
41	0HD044	Bearing 6009 2RS		X			
42	0D1513	Sun gear wheel					
43	0HD046	Bearing 6007 2RS		X			
44	0D0440	Toothed crown wheel 69 teeth + screws					
45	0D2248	Screw TCHC M6x25 (set x 10)					
46	0D3470	Planetary pulley					
47	0D5042	Washer MB 5					
48	0D0002	Notched nut M25x1,5					
49	0D1398	Poly V-belt 1150 J14	X	X			
50	0KJ007	Bearing 6203 2RS		X			
51	0D1514	Planetary shaft					
52	0D0615	Screw TC M6x16 stainless steel (set x 10)					
52	0D0513	Washer L 6 (set x 10)					
53	0D1515	Planetary pinion					
54	0KQ494	Screw TH M6x12 stainless steel (set x 10)					
54	0D0627	Washer CL M6 (set x 10)					
55	0D1397	Screw 19 thread turns					
56	0KQ579	Lipped seal 24x40x7 (set x 5)		X			
57	0D3728	Spacer 17x24x14					
59	0D3216	Screw TH M5x25 (set x 10)					
59	0KQ491	Washer size 5 (set x 10)					
60	0KJ007	Bearing 6203 2RS		X			
61	0KQ489	Key C 5x5x18,5 (set x 5)					
63	0HD001	Circlips 40I (set x 10)					
64	0D3729	Drive pulley		X			
65	0U0280	Shouldered pin					
66	0KQ494	Screw TH M6x12 stainless steel (set x 10)					
67	0D0627	Washer CL M6 (set x 10)					
68	0D1396	Wheel 18 teeth					
69	0D3728	Spacer 17x24x14					
70	0HD001	Circlips 40I (set x 10)					
71	0KJ007	Bearing 6203 2RS		X			
73	0U0282	Bearing 6003 2RS		X			
74	0KQ489	Key C 5x5x18,5 (set x 5)					
75	0D1395	Coupling shaft					

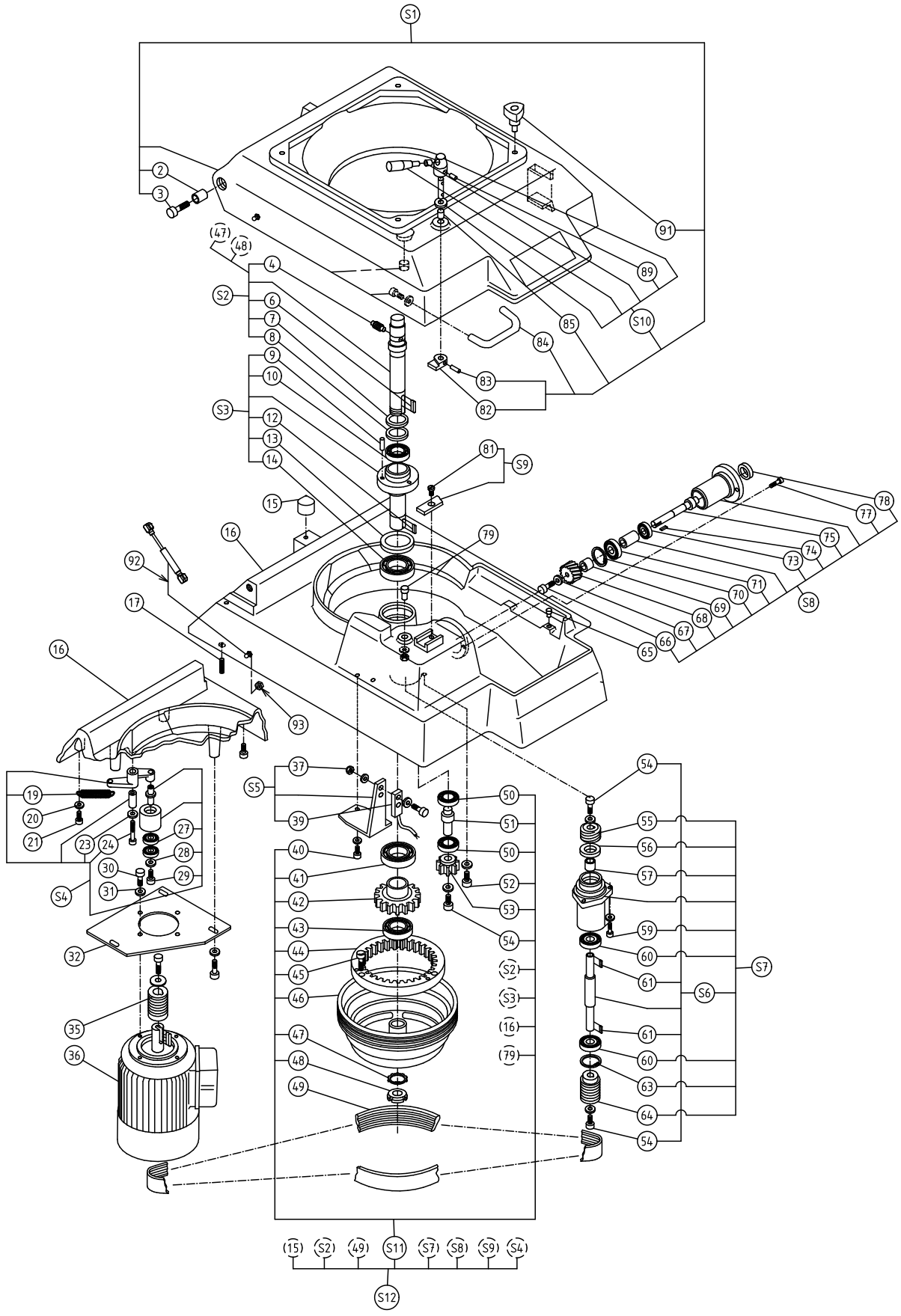
S1
2
3
(47)
(48)
4
S2
6
7
8
9
10
S3
12
13
14
15
16
92
17
16
19
20
21
23
24
27
28
30
29
31
S4
32
35
36
37
S5
39
40
41
42
43
44
45
46
47
48
49
(15)
S2
49
S11
S7
S8
S9
S4
S12
50
51
50
52
53
54
S2
S3
16
79
54
55
56
57
59
60
61
S6
61
60
63
64
54
S7
91
89
85
S10
84
83
82
81
S9
79
78
77
75
74
73
71
70
S8
69
68
67
66
65
93

Pos.	Code	Description	V	W&T	Ref.	Notes	S/N break
77	0U0659	Screw TF M6x20 stainless steel (set x 4)					
78	0KQ578	Lipped seal 22x32x7 (set x 5)		X			
79	0D1731	Centring device					
79	0D2263	Toothed washer 8 (set x 10)					
79	0D0642	Nut HU M8 stainless steel (set x 10)					
81	0D2328	Screw TF M8x16 stainless steel (set x 10)					
82	0D1733	Finger					
83	0KQ483	Pin G01 3x20 (set x 10)					
84	0D2711	Handle assembly					
85	0D1145	Bearing bushing 10x14x16					
89	0D0667	Pin G01 3x26 stainless steel (set x 10)					
91	0D1400	Handle					
92	0D7372	Gas spring		X			
93	0D0642	Nut HU M8 stainless steel (set x 10)					
S1	0D1399	Lid assembly					
S2	0HD011	Central shaft assembly		X			
S3	0HD031	Ejector drive assembly					
S4	0D1278	Tensioning idler pulley assembly					
S5	0D6735	Static relay bracket assembly					
S6	0D6440	Drive shaft assembly					
S7	0D1512	Sleeve assembly					
S8	0D3866	Hub assembly					
S9	0D1676	Catch assembly					
S10	0D1743	Closing catch assembly					
S11	0D6443	Body assembly					
S12	0D0248	Central mechanism packed					

TR300 - Exploded view - Stand

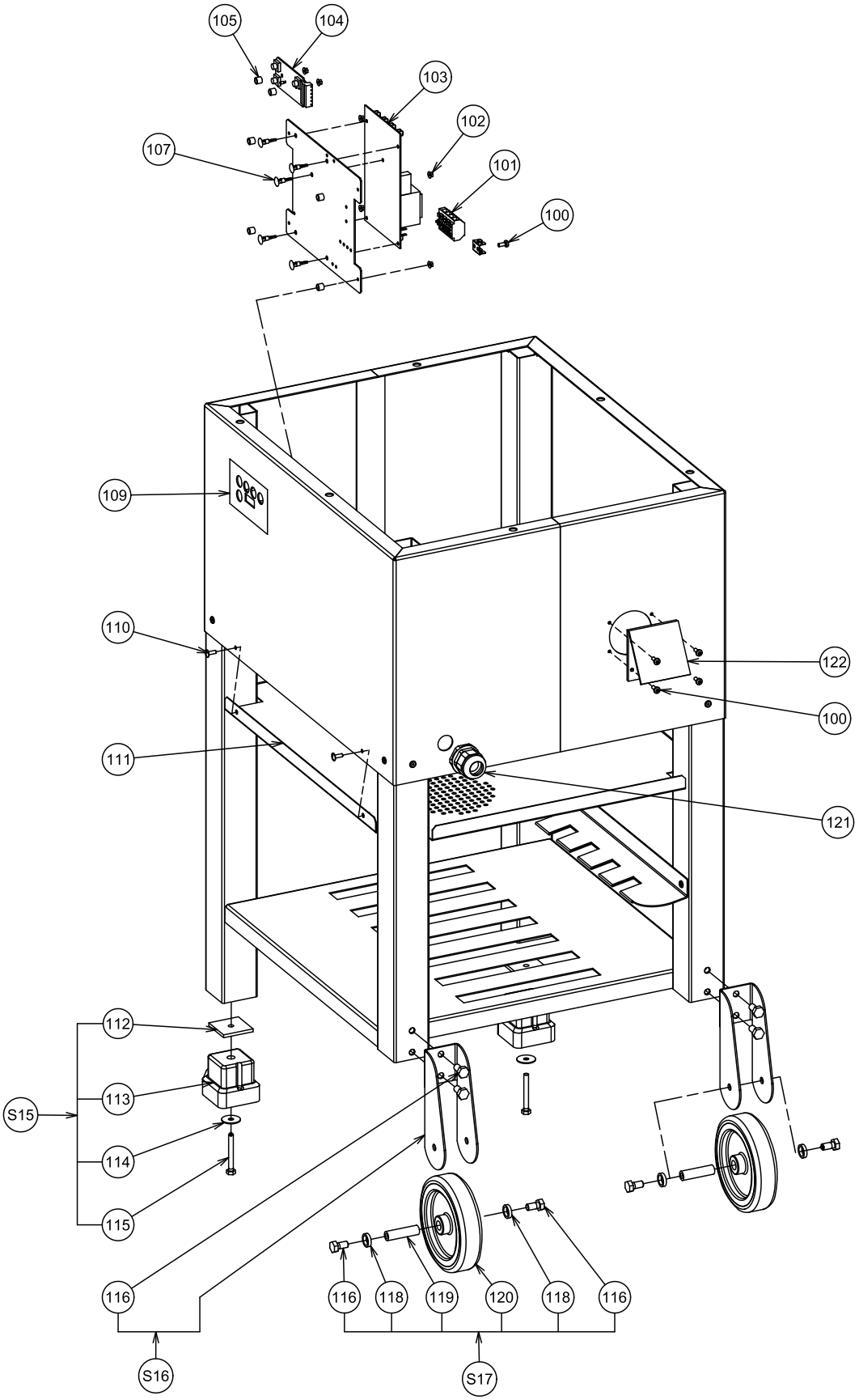

Pos.	Code	Description	V	W&T	Ref.	Notes	S/N break
100	0D6724	Screw CX M4x10 (set x 10)					
101	0D5135	Terminal strip (set x 5)					
102	0D7383	Nut HU M3 (set x10)					
103	0D7532	Power board		X			
104	0D7531	Control board		X			
105	0D5633	Spacer C,I, (set x 10)					
107	0D2848	Spacer (set x 6)					
109	0DF155	STD control plate panel			A		
109	0DF156	Elux control plate panel			B		
110	0KQ527	Screw TRL M4x8 (set x 10)					
111	0D7530	Base plate assembly					
112	0D0541	Square nut (set x 10)					
113	0U0566	Pad					
114	0KQ506	Washer LL 10 (set x 10)					
115	0D0598	Screw TH M8x50 (set x 10)					
116	0D1709	Screw TH M8x12 (set x 10)					
118	0D2699	Wheel spacer (set x 2)					
119	0D5919	Wheel shaft					
120	0D5920	Roue/Wheel					
121	0D2073	Assembly cable gland					
122	0D1518	Base 20A 3P+Earth					
S15	0D7373	Pad assembly					
S16	0D7529	Wheel carrier assembly					
S17	0D0152	Fixed wheel assembly					

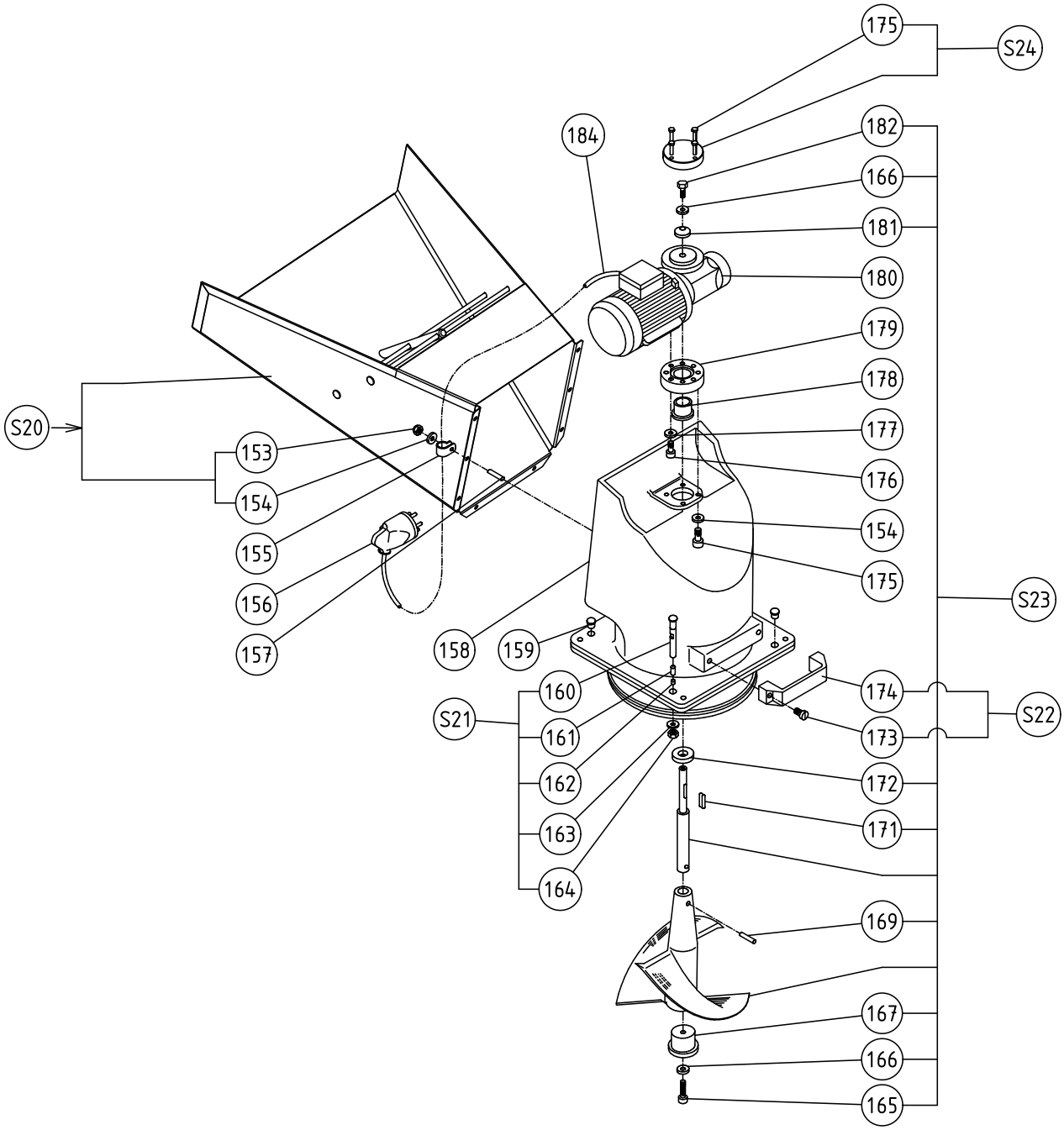
175
S24
184
182
166
181
180
179
178
177
176
154
175
S23
S20
153
154
155
156
157
158
159
160
S21
161
162
163
164
174
173
S22
172
171
169
167
166
165

Pos.	Code	Description	V	W&T	Ref.	Notes	S/N break
153	0D0583	Cap nut M6 (set x 10)					
154	0D0624	Washer CS M6 stainless steel (set x 10)					
155	0D1177	Collar CV 10					
156	0D1519	Plug 20 A 3P+E					
157	0U0671	Screw STF M6x20 stainless steel (set x 10)					
158	0D6449	Bare funnel, packed					
159	0D3601	Plug GPN 300 F9					
160	0D3733	Magnet pin					
161	0KI586	Magnet 6x25					
162	0KJ059	Plug GPN 300 VO31					
163	0KQ490	Washer size 12 (set x 10)					
164	0KQ554	Nut HM M12 (set x 10)					
165	0D2329	Screw TH M8x30 stainless steel (set x 10)					
166	0KQ524	Washer M8 stainless steel (set x 10)					
167	0HD028	Lower ring					
169	0D0675	Pin GO1 8x45 stainless steel (set x 2)					
171	0KQ486	Key A 6x6x30 (set x 10)					
172	0D3861	Thrust washer stainless steel					
173	0D6448	Screw TC M8x20 stainless steel (set x 10)					
174	0D1443	Handle					
175	0D0595	Screw TH M6x25 stainless steel (set x 10)					
176	0D0657	Screw TCHC M6x20 (set x 10)					
177	0D2876	Washer W6 (set x 10)					
178	0D1401	Bearing bushing 28x33x22					
179	0D1742	Fitting clamp					
180	0D1441	Hopper geared motor,packed	X				
181	0D1620	Washer 35x9x8					
182	0D0507	Screw TH M8x20 stainless steel (set x 10)					
184	0D3936	Hopper power card assembly					
S20	0D0860	Overflow assembly					
S21	0D1446	Magnet assembly					
S22	0D3791	Complete handle					
S23	0D1511	Propeller assembly					
S24	0D6147	Cover assembly					

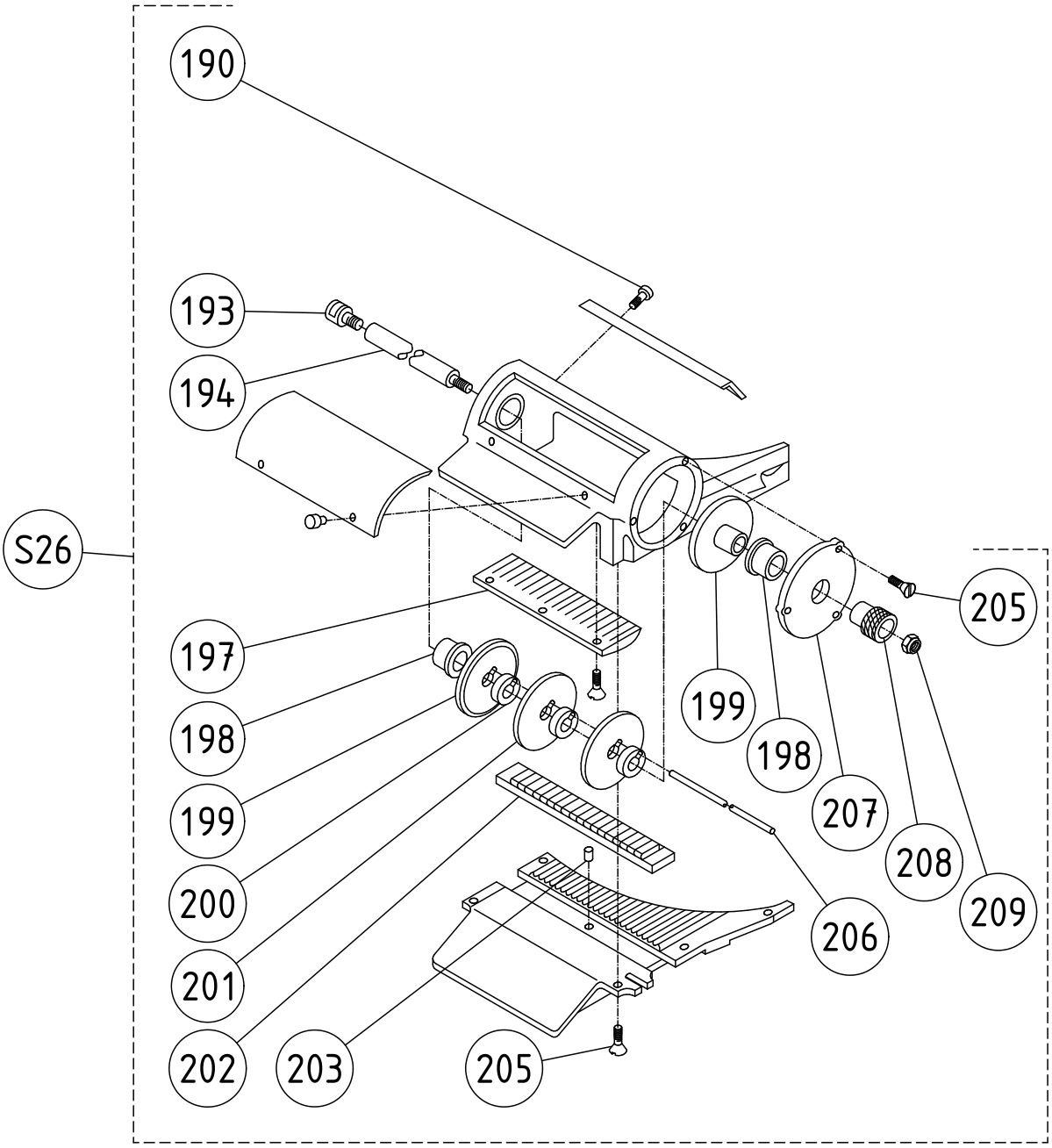
190
193
194
S26
205
197
199
198
207
208
209
198
199
200
206
201
202
203
205

Pos.	Code	Description	V	W&T	Ref.	Notes	S/N break
190	0D2894	Screw TRL M5x8 stainless steel (set x 10)					
193	0D1587	Connection shaft					
194	0D1588	Disk shaft					
197	0D6451	Size 6 grid assembly					
197	0D1445	Size 8 grid assembly					
197	0D1444	Size 10 grid assembly					
197	0KQ558	Screw TF M5x10 stainless steel (set x 10)					
198	0D1401	Bearing bushing col 28x33x22					
199	0D1402	Disk flange					
200	0D6452	Chock thickness 6					
200	0D3938	Chock thickness 8					
200	0D6463	Chock thickness 10					
201	0D1403	Disk					
202	0D6454	Guide base plate 6					
202	0D1589	Guide base plate 8					
202	0D3736	Guide base plate 10					
203	0D3422	Pin GO5 4x10 stainless steel (set x 10)					
205	0D2228	Screw TFB M5x12 stainless steel (set x 10)					
206	0D3939	Connection rod					
207	0D3735	French fries accessory flange					
208	0D1404	Knurled nut					
209	0U0651	Lock nut M10 (set x 10)					
S26	653076	Complete blade block unit F306					
S26	653074	Complete blade block unit F308					
S26	653069	Complete blade block unit F310					

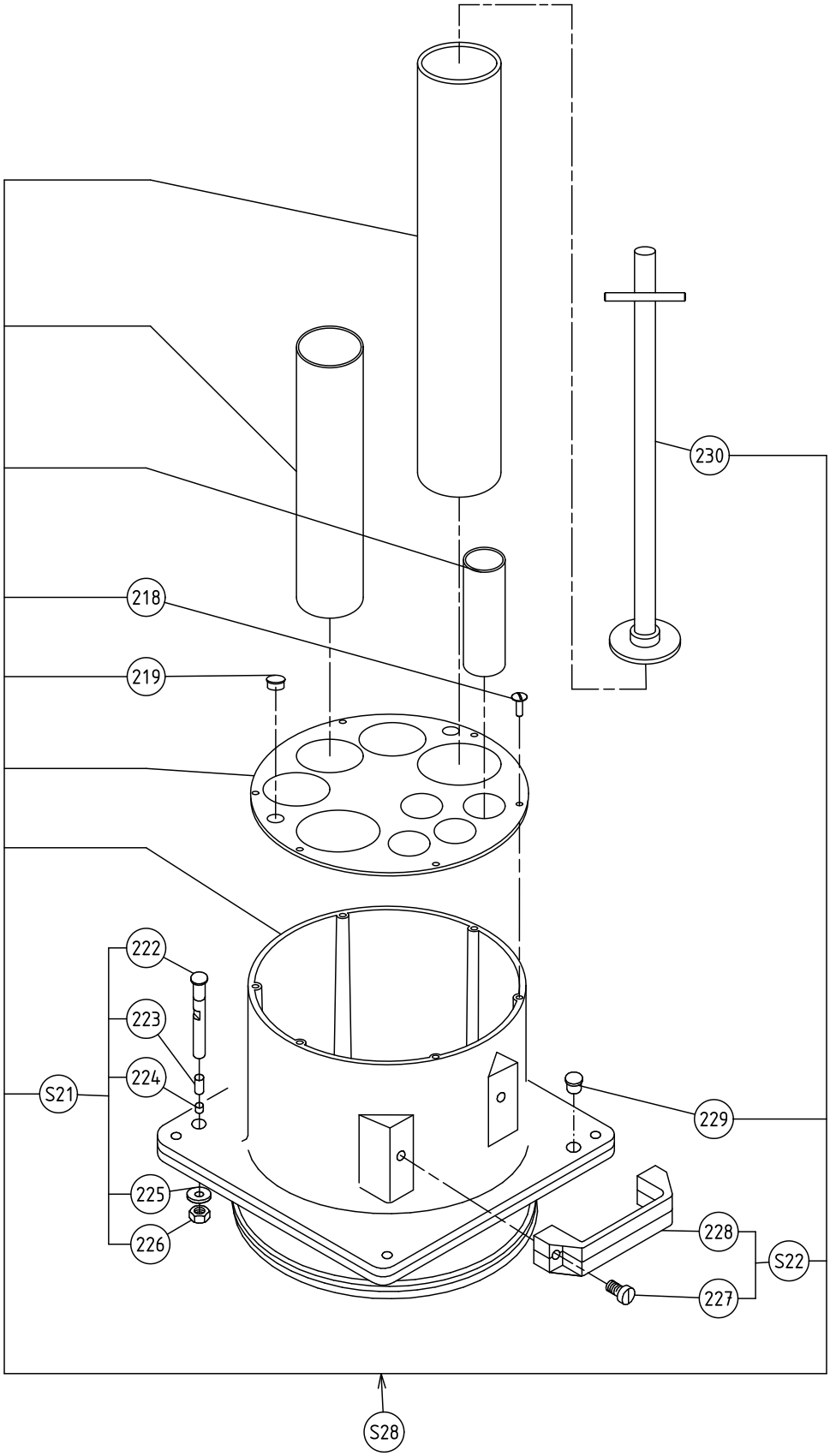
230
218
219
222
223
224
S21
225
226
229
228
S22
227
S28

Pos.	Code	Description	V	W&T	Ref.	Notes	S/N break
218	0D0523	Screw TRL M5x10 stainless steel (set x 10)					
219	0U0298	Plug GPN F181					
222	0D3733	Magnet pin					
223	0KI586	Magnet 6x25					
224	0KJ059	Plug GPN VO31					
225	0KQ490	Washer size 12 (set x 10)					
226	0KQ554	Nut HM M12 (set x 10)					
227	0D6448	Screw TC M8x20 stainless steel (set x 10)					
228	0D1443	Handle					
229	0D3601	Plug GPN F9					
230	0D1867	Pusher	X				
S21	0D1446	Magnet assembly					
S22	0D3791	Handle assembly					
S28	653129	Hopper for long vegetables,packed					

CE

Electrolux Professionel SAS
Z.I. du Mont - 23200 AUBUSSON - FRANCE
www.electroluxprofessional.com