RC14

PNC	Model	Modules	Description	Note
601151	RC14	**B;D**	POTATO CHIPPER - AUTOMATIC HOPPER -3 230-400/50	
601229	RC14	**B;C**	POTATO CHIPPER - AUTOMATIC HOPPER - 1 230/50	
603431	RC14	**A;D**	POTATO CHIPPER - AUTOMATIC HOPPER - 3 230-400/50	
603432	RC14	**A;C**	POTATO CHIPPER - AUTOMATIC HOPPER - 1 230/50	

RC14

Modules classifications

A	DITO SAMA
B	ELECTROLUX PROFESSIONAL
C	I 220-240V 50HZ
D	III 230/400V 50HZ

Pag.	Index
4	Exploded view - Hopper
5	Parts list - Hopper
6	Exploded view - Body
7	Parts list - Body
8	Exploded view - Motor
9	Parts list - Motor

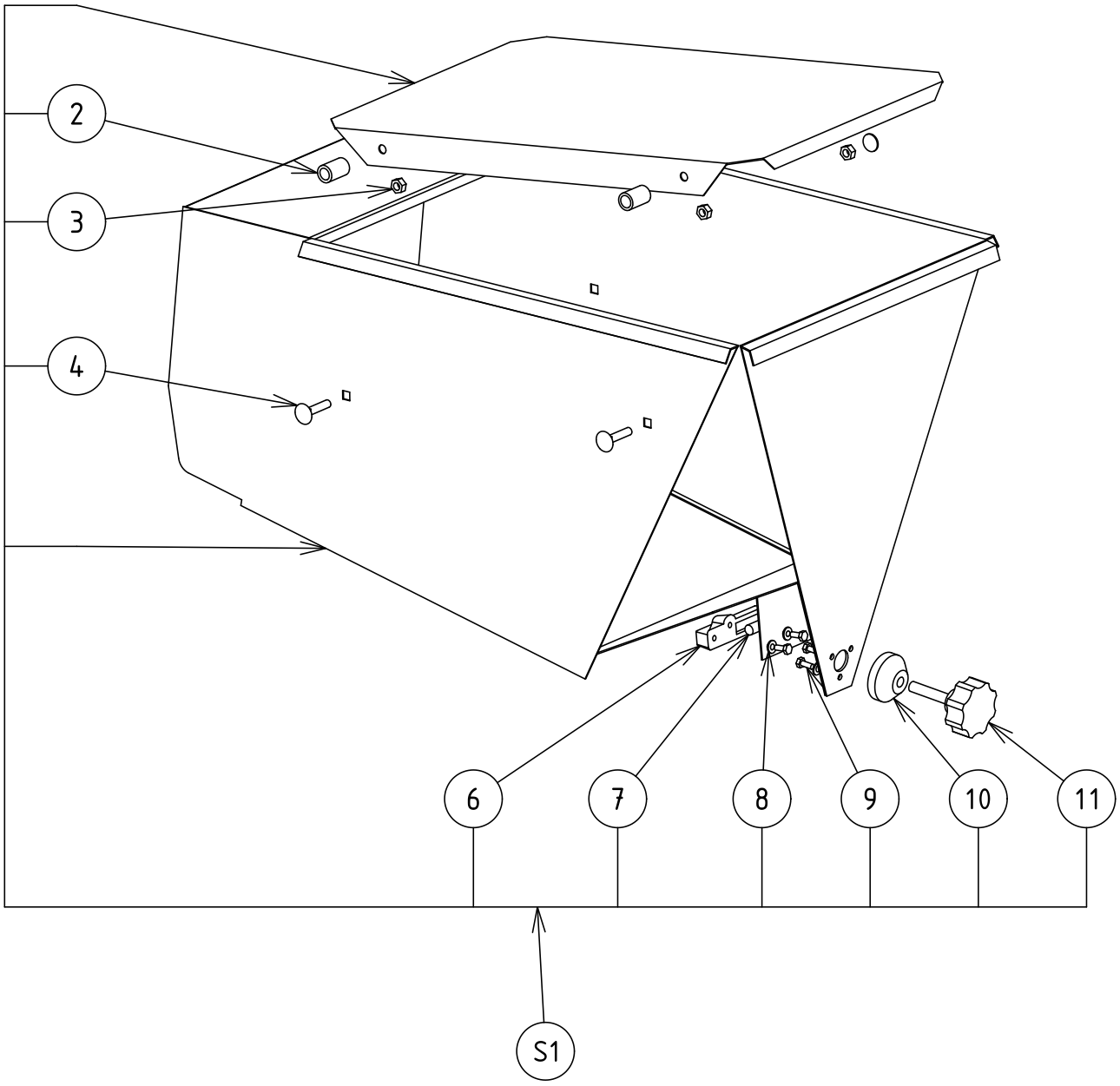
2
3
4
6
7
8
9
10
11
S1

Pos.	Code	Description	V	W&T	Ref.	Notes	S/N break
2	0D1578	Spacer					
3	0D8004	Nut HU M6 (set x 10)					
4	0D6290	Screw TRCC M6x35 (set x 10)					
6	0D7546	Magnet holder assembly					
7	0KJ062	Magnet	X				
8	0D0631	Washer CS M4 (set x 10)					
9	0U0665	Screw TH M4x10 (set x 10)					
10	0U0640	Handle support					
11	0U0646	Handle	X				
S1	0U0678	Hopper assembly					

RC14 - Exploded view - Body

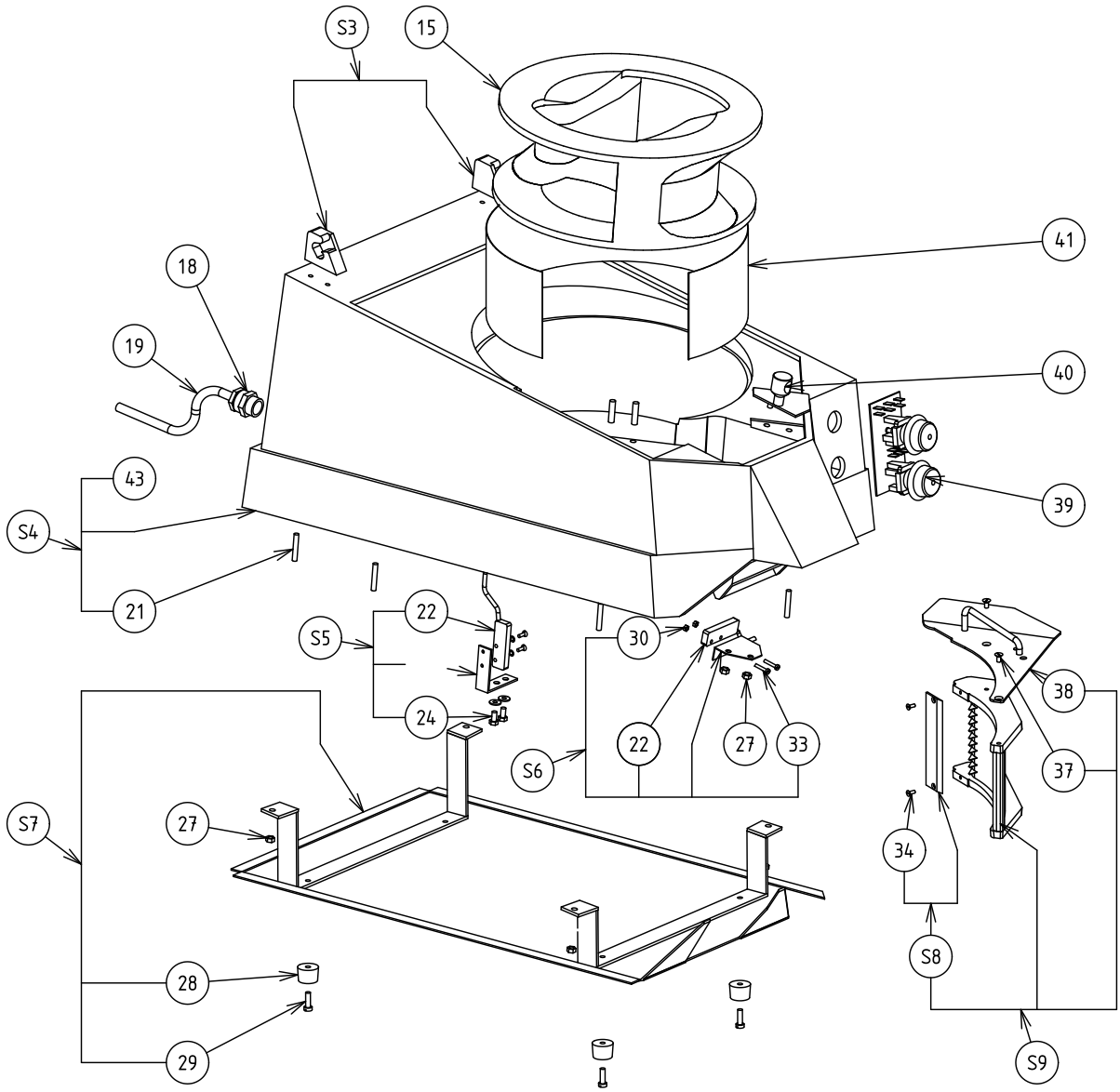

Pos.	Code	Description	V	W&T	Ref.	Notes	S/N break
15	0U0642	Rotor	X				
	0D1004	Screw PTWN 1442 (set x 10)					
18	0D3513	Cable gland (set x 5)					
19	0D5828	Single phase power supply cord	X		**C**		
19	0D5823	Three phase power supply cord	X		**D**		
21	0D3415	Screw SHC M5x30 stainless steel (set x 10)					
22	0KQ281	Detector		X			
24	0D0537	Screw TH M5x10 (set x 10)					
24	0D2297	Washer CS M5 (set x 10)					
27	0D8023	Nut HU M5 (set x 10)					
28	0KL061	Pad + screw					
29	0D3216	Screw TH M5x25 (set x 10)					
30	0D7383	Nut HU M3 (set x 10)					
33	0D5308	Screw TC M3x12 (set x 10)					
34	0D1036	Screw TF M3x8 (set x 10)					
37	0D0662	Screw TF M4x8 (set x 10)					
38	0D0475	Handle					
39	0KJ586	Control card assembly	X				
40	0U0639	Bolt plate					
41	0D5940	Cutting chamber					
S3	0U0679	Hinge assembly					
S4	0D5398	Body assembly					
S5	0D2576	Blade safety assembly					
S6	0U0711	Hopper safety assembly					
S7	0U0676	Stainless steel lower lid assembly					
S8	0D0715	Vertical blade assembly					
S9	653022	Chipped potato unit 8 mm					
S9	653023	Chipped potato unit 10 mm					
S9	653024	Chipped potato unit 12 mm					
S9	653018	Chipped potato unit 14 mm					
S9	653503	Slicer unit 4 mm					
S9	653504	Slicer unit 6 mm					
S9	653505	Slicer unit 8 mm					

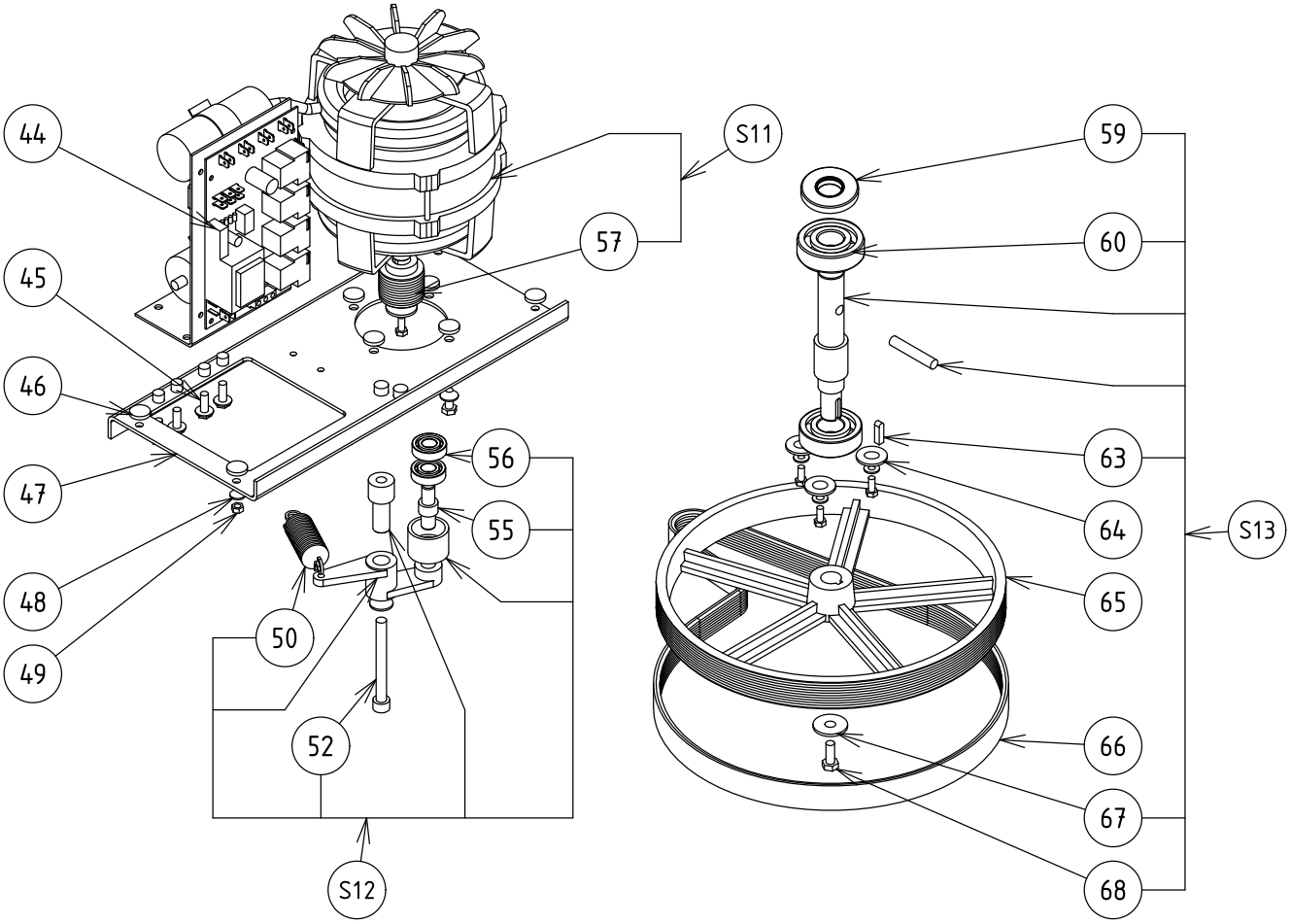
44
45
46
47
48
49
50
52
S12
56
55
S11
57
59
60
63
64
65
66
67
68
S13

Pos.	Code	Description	V	W&T	Ref.	Notes	S/N break
44	0KQ429	Single phase plate assembly	X		**C**		
44	0D3329	Klixon 4CR2-692	X		**C**		
44	0U0471	Starter capacitor 90MF	X		**C**		
44	0U0403	Permanent capacitor 10 MF	X		**C**		
44	0KJ778	Three phase plate assembly	X		**D**		
44	0KQ662	Braking capacitor	X		**D**		
45	0D2901	Screw TH M6x16 (set x 10)					
46	0D6401	Shock absorber pad (set x 4)					
47	0D6291	Motor support					
48	0D2297	Washer CS M5 (set x 10)					
49	0D0579	Nut HU M5 (set x 10)					
50	0KJ057	Spring					
52	0D0558	Screw TH M6x60 (set x 10)					
52	0D0620	Washer 24x6,2x2 (set x 10)					
55	0O0553	Pulley shaft					
56	0KQ396	Bearing 6000		X			
57	0D1586	Drive pulley		X			
59	0U0645	Double lipped seal 20x40x10 (set x 5)		X			
60	0KQ395	Bearing 6204		X			
63	0D1582	Key C 5x5x19 (set x 5)					
64	0D0620	Washer 24x6,2x2 (set x 10)					
64	0D2297	Washer CS M5 (set x 10)					
64	0D0506	Screw TH M5x12 (set x 10)					
65	0U0641	Driven pulley		X			
66	0U0644	Belt J10	X	X			
67	0D0620	Washer 24x6,2x2 (set x 10)					
68	0D0499	Screw TH M6x16 (set x 10)					
S11	0U0675	Motor 1-230/240V 50HZ	X		**C**		
S11	0D2360	Motor 3-380/415V 50HZ	X		**D**		
S12	0U0680	Tensioner assembly					
S13	0U0677	Shaft assembly		X			

CE

Electrolux Professionel SAS
Z.I. du Mont - 23200 AUBUSSON - FRANCE
www.electroluxprofessional.com