TR260

PNC	Model	Modules	Description	Note
600125	DTR260	**A;D;G;I;L**	VEGETABLE SLICER - LEVER HOPPER - 2 SPEED -	replace by **CC0H65**
603275	TR260	**B;C;H;L**	VEGETABLE SLICER - MOTOR UNIT - 1 SPEED	
603277	TR260	**B;C;F;G;H;L**	VEGETABLE SLICER - LEVER HOPPER - 1 SPEED - MOBIL STAND	replace by **CC0H5P**
603278	TR260	**B;D;I;L**	VEGETABLE SLICER - MOTOR UNIT - 2 SPEED	
603281	TR260	**B;D;F;G;I;L**	VEGETABLE SLICER - LEVER HOPPER - 2 SPEED - MOBIL STAND	replace by **CC0H66**
603283	TR260	**B;E;I;L**	VEGETABLE SLICER - MOTOR UNIT - 2 SPEED	
603286	TR260	**B;G;I;J;M**	VEGETABLE SLICER - LEVER HOPPER - 2 SPEED - US PLUG	
603428	DTR260	**A;D;I;L**	VEGETABLE SLICER - MOTOR UNIT - 2 SPEED	
603429	DTR260	**A;C;I;L**	VEGETABLE SLICER - MOTOR UNIT - 1 SPEED	
603700	DTR260	**A;C;F;G;L**	VEGETABLE SLICER - LEVER HOPPER - 1 SPEED - MOBIL STAND	replace by **CC0H5N**
603792	DTR260	**A;D;I;K;L**	VEGETABLE SLICER - AUTOMATIC HOPPER - 2 SPEED	-->15/01/2025
602255	DTR260	**A;G;I;J;M**	VEGETABLE SLICER - LEVER HOPPER - 2 SPEED - US PLUG	

TR260

Modules classifications

A	DITO SAMA
B	ELECTROLUX PROFESSIONAL
C	I - 220/240 50
D	III - 380/415V
E	III - 220-240V 50HZ
F	MOBIL STAND
G	LEVER HOPPER
H	1 SPEED
I	2 SPEEDS
J	III - 208-240V 60HZ
K	AUTOMATIC HOPPER
L	WITHOUT PLUG
M	USA PLUG

Pag.	Index
4	Exploded view - Casing + tactile control
5	Parts list - Casing + tactile control
8	Exploded view - Casing USA
9	Parts list - Casing USA
10	Exploded view - Mechanism
11	Parts list - Mechanism
12	Exploded view - Body
13	Parts list - Body
16	Exploded view - Standard hopper
17	Parts list - Standard hopper
18	Exploded view - Cabbage hopper
19	Parts list - Cabbage hopper
20	Exploded view - Automatic hopper
21	Parts list - Automatic hopper
22	Exploded view - Long vegetable hopper
23	Parts list - Long vegetable hopper

TR260 - Exploded view - Casing + tactile control

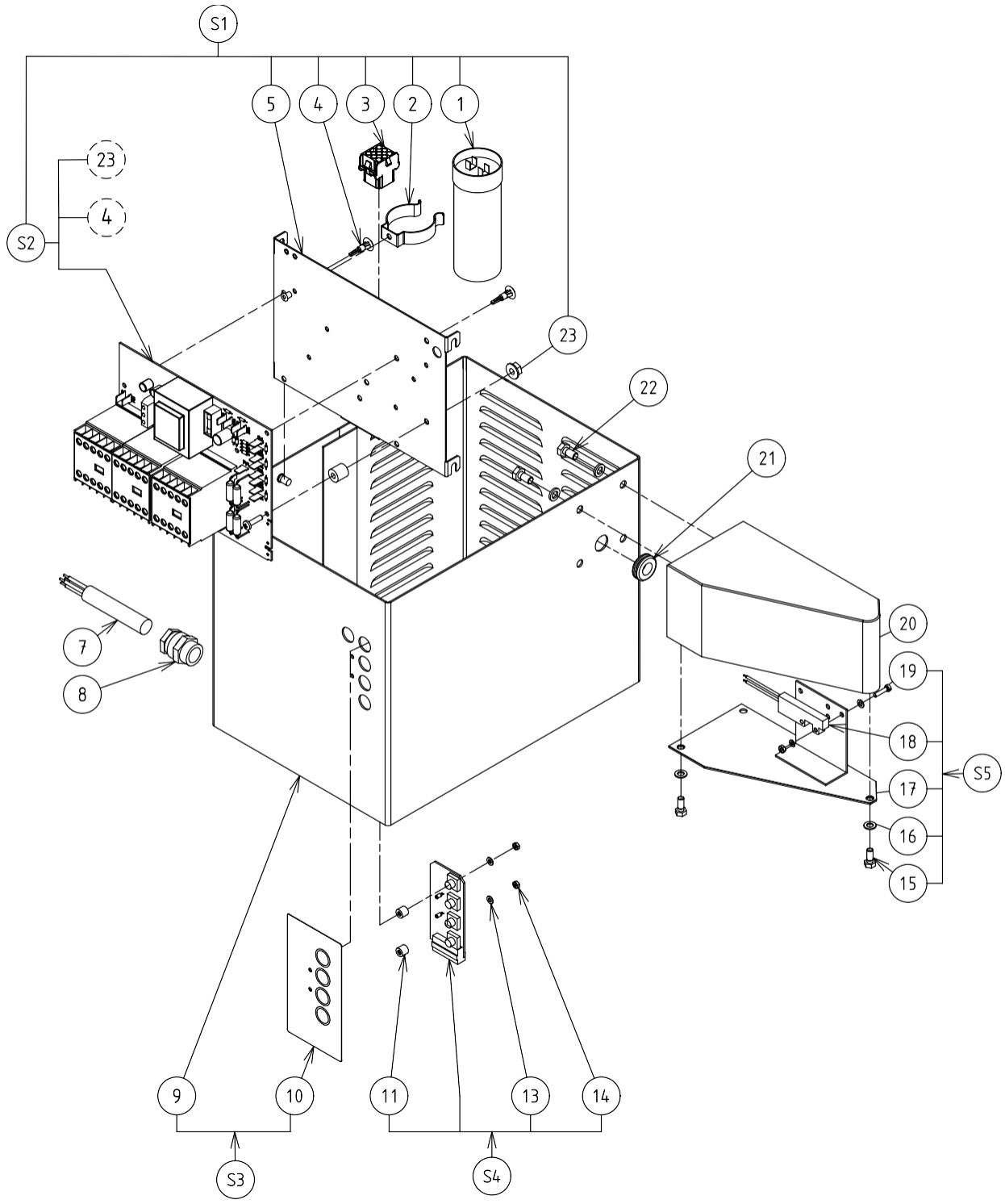

Pos.	Code	Description	V	W&T	Ref.	Notes	S/N break
1	0H1034	Braking capacitor 200mf	X		**I**		
2	0D3491	Bracket 100x18 (set x 5)					
2	0D5631	Rivets TP 4x10 (set x 10)					
3	0D5632	Female box 9v					
4	0D2848	Fix spacer circuit (set x 6)					
5	0D5754	Component support					
7	0D6097	Single phase supply cord			**C**		
7	0D3941	Three phase power supply cord			**D;E**		
8	0D2073	Cable gland assembly					
9	0D5755	Tactile motor casing					
10	0D5756	1 speed control panel plate			**H**		-->31/01/2024
10	0DF135	1 speed control panel plate			**B;H**		02/02/2024-->
10	0DF136	1 speed control panel plate			**A;H**		02/02/2024-->
10	0D5757	2 speed control panel plate			**I**		-->31/01/2024
10	0DF137	2 speed control panel plate			**B;I**		02/02/2024-->
10	0DF138	2 speed control panel plate			**A;I**		02/02/2024-->
11	0D5633	Spacer c,i, M3x8x7 (set x 10)					
13	0D5188	Washer M3 PE (set x 10)					
14	33987	Nut HU M3 stainless steel (set x 10)					
15	0D0506	Screw TH M5x12 (set x 10)					
16	0D2297	Washer CS M6 stainless steel (set x 10)					
17	0D6042	Safety device support					
18	0D6190	Proximity detector		X			
19	0D0608	Screw TCM3x20 stainless steel (set x 10)					
19	033986	Washer M3 (set x 10)					
19	0D2877	Washer size 3 (set x 10)					
19	033987	Nut HU M3 stainless steel (set x 10)					
20	0KQ592	Safety box					
21	0D0946	Grommet 11x15x1,5 (set x 10)					
22	0D0594	Screw TH M6x10 (set x 10)					
23	0D2321	Screw TC M4x20 (set x 10)					
23	0D6441	Spacer (set x 10)					
23	0D3065	Nut HU M4 (set x 10)					
S1	0D5759	Complete single phase component support	X		**C**		
S1	0D5760	Complete three phase componenet support	X		**D;E**		

TR260 - Exploded view - Casing + tactile control

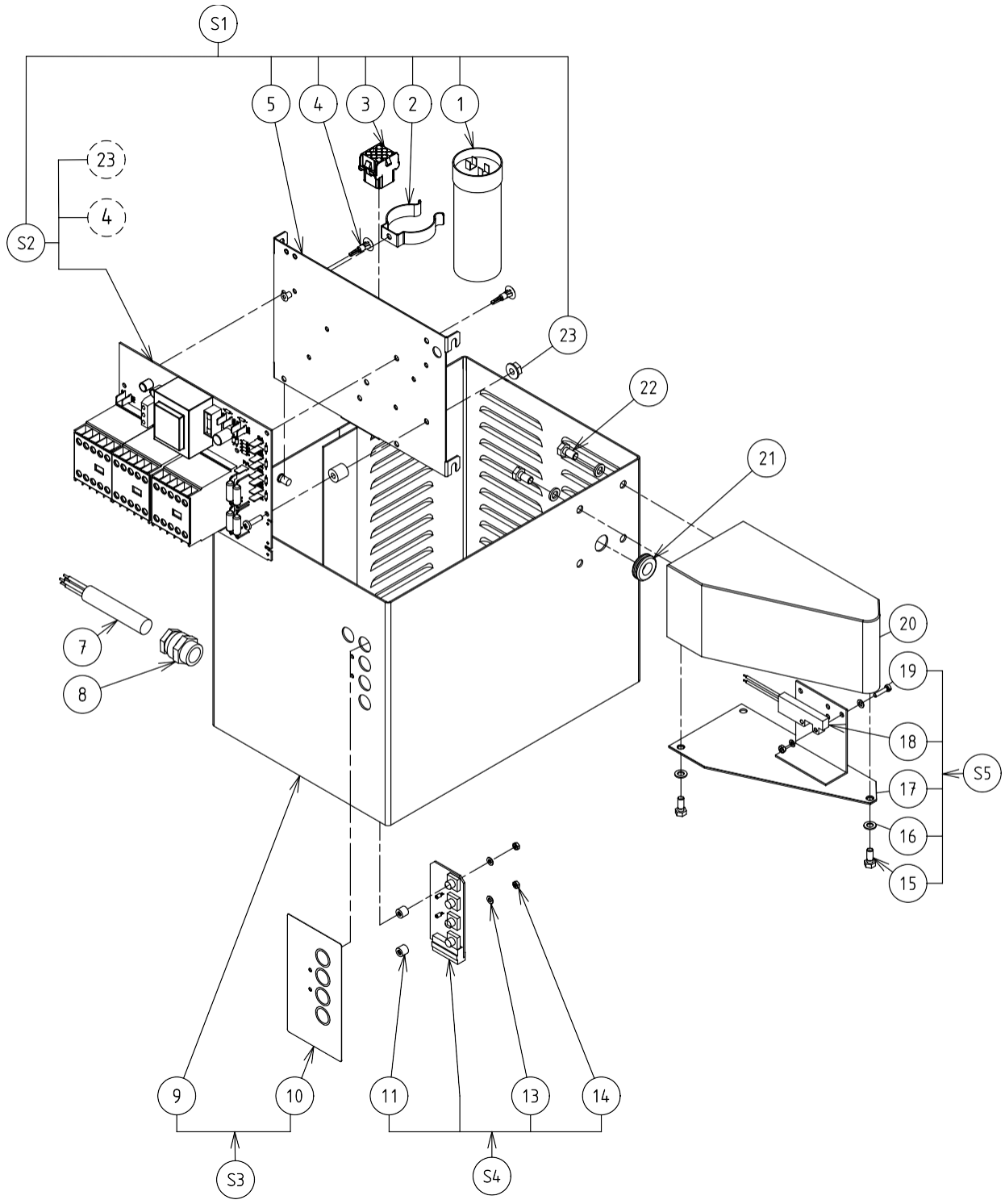

Pos.	Code	Description	V	W&T	Ref.	Notes	S/N break
S2	0KQ429	Single phase power card assembly	X		**C**		
S2	0D8125	Three phase power card assembly	X		**D**		
S3	0D5761	1 speed casing assembly			**H**		
S3	0D5762	2 speed casing assembly			**I**		
S4	0D8051	Complete 1 speed control card	X		**H**		
S4	0D5765	Complete 2 speed control card	X		**I**		
S5	0D5766	Safety bracket assembly					

TR260 - Exploded view - Casing USA

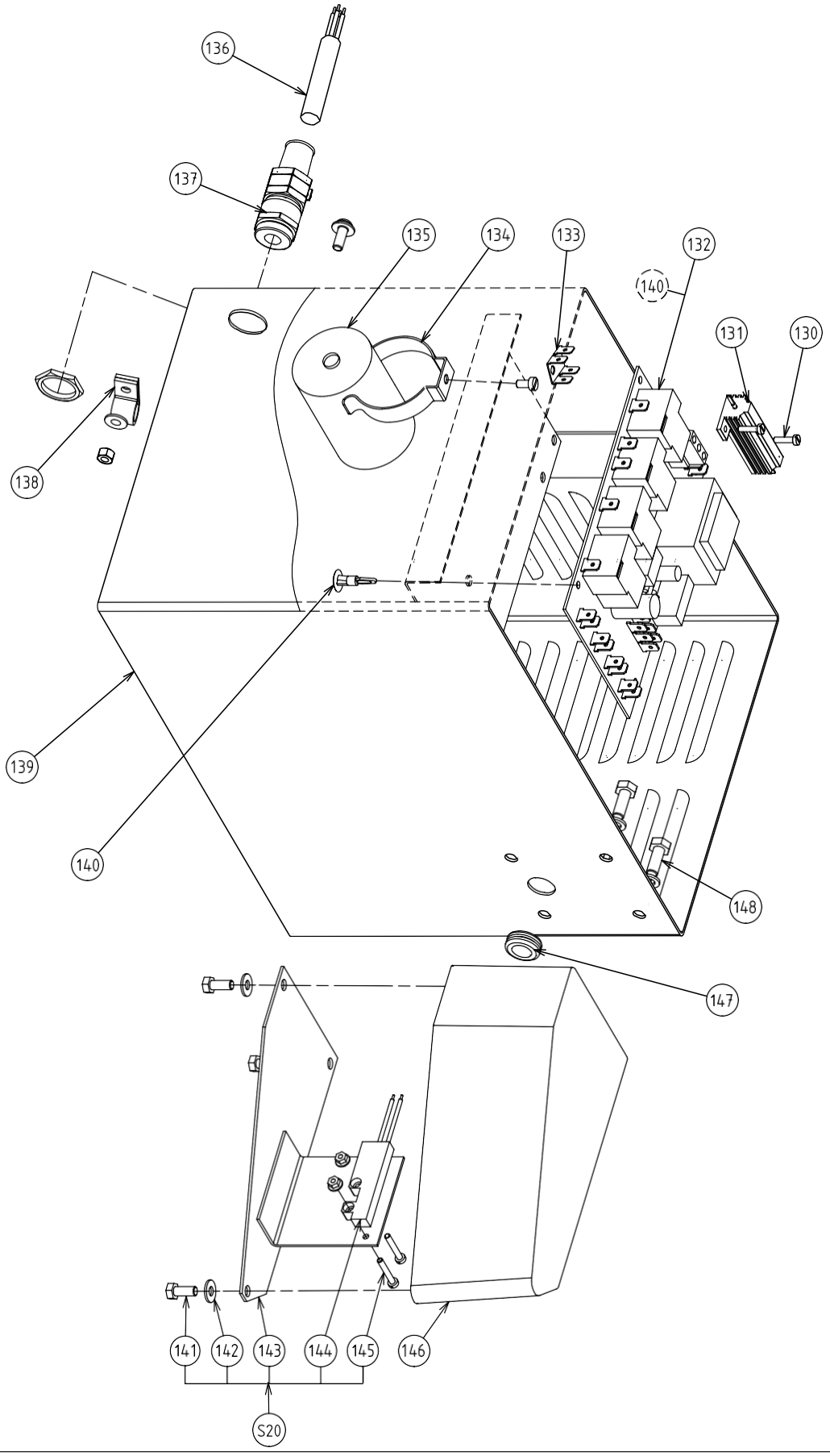

Pos.	Code	Description	V	W&T	Ref.	Notes	S/N break
130	0D5136	Screw TC M3x12 nylon (set x 10)			**M**		
130	0D5188	Washer M3 (set x 10)			**M**		
130	0D7383	Nut HUM3 (set x 10)			**M**		
131	033891	Resistor 10 OHM 50w	X		**M**		
132	0D7962	Three phase power card assembly	X		**M**		
133	0D3567	Brass earth terminal (set x 5)			**M**		
133	0D0610	Screw TC M 4x8 (set x 10)					
133	0D3065	Nut HU M 4 (set x 10)					
134	0D3491	Bracket 100x18 (set x 5)					
135	0H1034	Condensator 200MF	X				
136	0D8000	Three phase power cord US	X		**M**		
136	0DF102	Plug NEMA	X		**M**		
137	0D2073	Stuffing box assembly					
138	0D1177	Collar CV10					
138	0D0579	Nut M5 (set x 10)					
138	0D2297	Washer CS M5 (set x 10)					
138	0DF101	Screw Torx M5x12 (set x 10)					
139	0DF104	Casing USA			**M**		
140	0D2848	Fix spacer circuit (set x 6)					
141	0D0506	Screw TH M5x12 (set x 10)					
142	0D2297	Washer CS M6 stainless steel (set x 10)					
143	0D6042	Safety device support					
144	0D6190	Proximity detector		X			
145	0D0608	Screw TCM3x20 stainless steel (set x 10)					
145	0D7383	Nut HU M3 (set x 10)					
146	0KQ592	Safety box					
147	0D0946	Grommet 11x15x1,5 (set x 10)					
148	0D0499	Screw TH M6x16 (set x 10)					
148	0D0530	Washer 6 (set x 10)					
S20	0D5766	Safety bracket assembly					

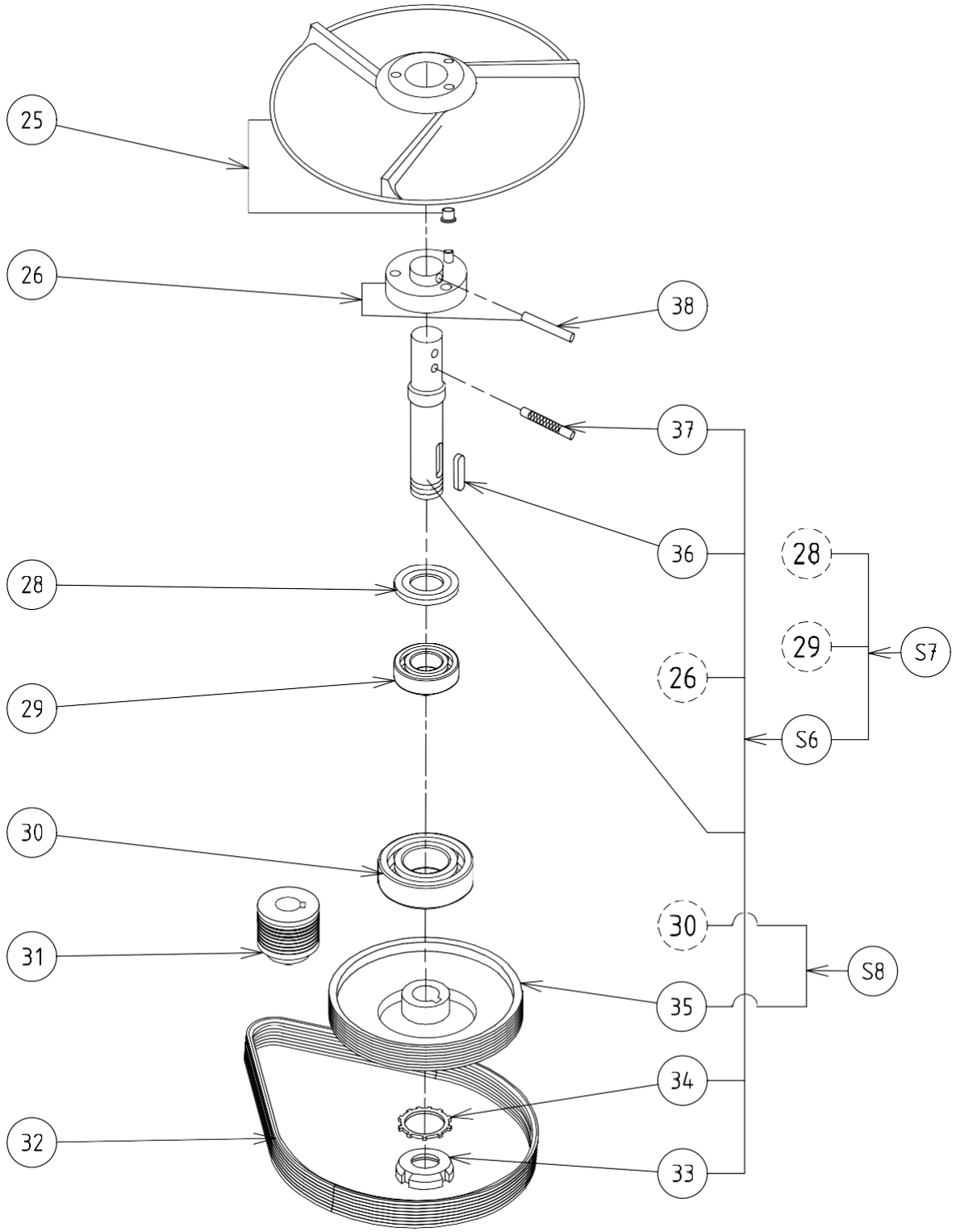
25
26
38
37
36
28
28
29
S7
26
29
S6
30
30
31
S8
35
34
32
33

Pos.	Code	Description	V	W&T	Ref.	Notes	S/N break
25	653903	Ejector assembly	X				
25	0DF103	Ejector assembly USA	X		M		
26	0KQ534	Ejector drive assembly					
28	0D3533	Lipped seal 35x62x7 (set x 5)		X			
29	0D0006	Bearing 6206 DDU		X			
30	0D0004	Bearing 6008 DDU		X			
31	0D0915	Drive pulley assembly		X			
31	0D0781	Drive pulley 60hz		X	J		
32	0KJ743	Poly V-belt 1016 J12	X	X			
33	0D3035	Lock nut M25 (set x 5)					
34	0HD003	Washer MB 5 (set x 5)					
35	0D0003	Machined driven pulley		X			
36	0D2915	Cotter pin A 6x6x38 (set x10)					
37	0KQ697	Knurled pin					
38	0KQ516	Pin G01 6x35 stainless steel (set x 10)					
S6	0KQ676	Plate shaft assembly		X			
S6	0DF098	Plate shaft assembly		X	M		
S7	0D0913	Complete drive assembly					
S8	0D0914	Driven pulley assembly					

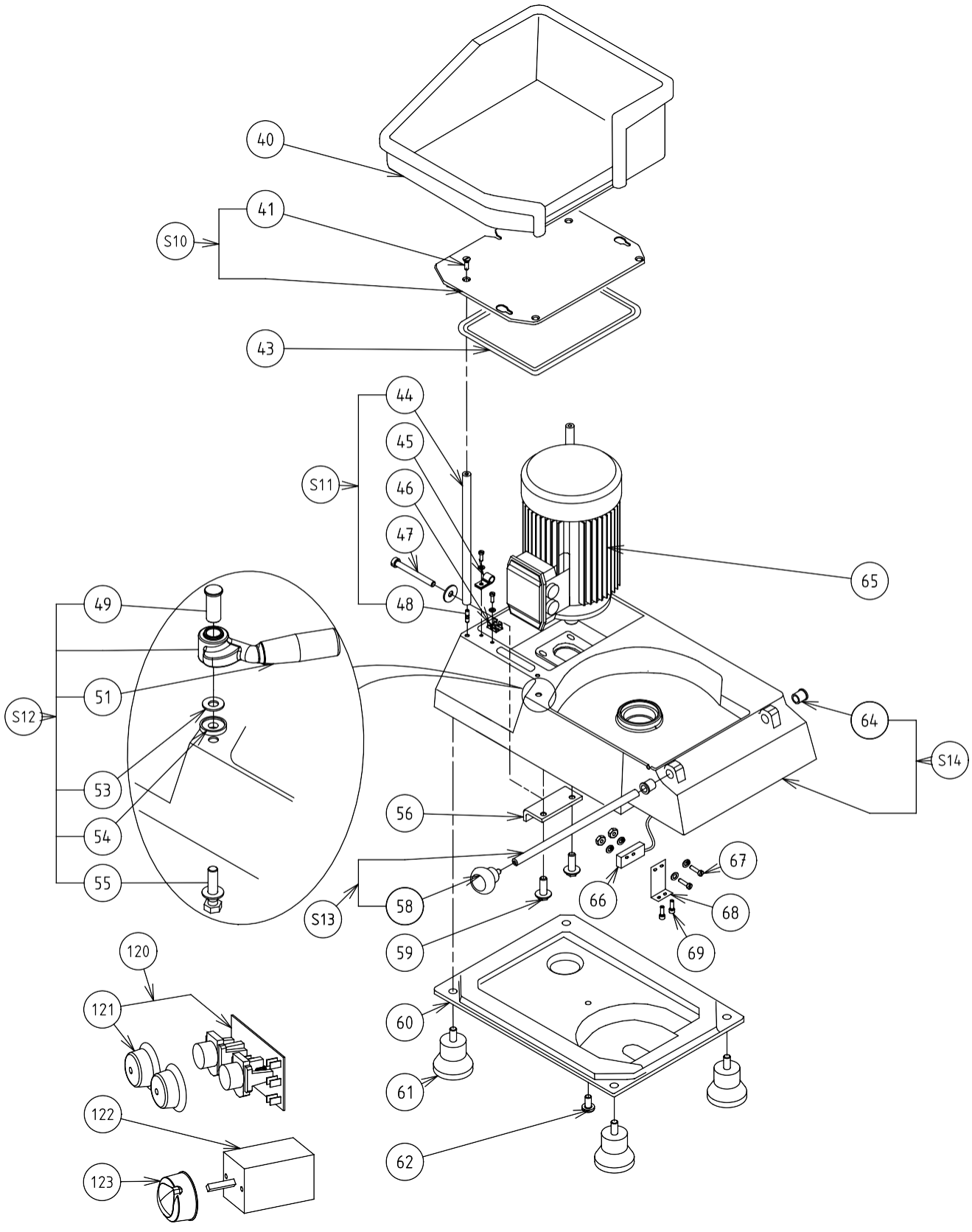
40
41
S10
43
44
45
46
47
48
S11
49
51
S12
53
54
55
56
58
S13
59
60
61
62
64
65
66
67
68
69
S14
120
121
122
123

Pos.	Code	Description	V	W&T	Ref.	Notes	S/N break
40	0KQ568	Container assembly					
40	0DF094	Container assembly USA			**M**		
41	0U0659	Screw TF M6x20 (set x4)					
43	0KQ352	Cut-out profile seal					
44	0D0008	Rod					
45	0D1708	Collar CV9 (set x 10)					
46	0D3567	Brass earth terminal (set x 5)					
47	0D0616	Screw TC M6x60 ACZN (set x 10)					
47	0D0624	Washer CS M6 stainless steel (set x 10)					
47	0D0503	Nut HU M6 stainless steel (set x 10)					
48	0D3541	Pin M6x20x8x8 (set x 10)					
49	0D6109	Bolt pin (set x 2)					
51	0D6125	Handle					
53	0KQ524	Washer M8 stainless steel (set x 10)					
54	0D5707	Spacer					
55	0D0591	Screw TH M8x35 stainless steel (set x 10)					
55	0D0632	Washer CS M8 (set x 10)					
56	0D0656	Tensioning bracket assembly					
58	0D0010	Ball 1742					
59	0D6084	Screw TH M8x30 (set x 10)					
60	0D0001	Base plate					
61	0KQ456	Pad assembly (set x 4)					
62	0D0601	Screw TRL M6x12 (set x 10)					
64	0KJ010	Neck ring 10x14x15,5 NYLON					
65	0D5767	Single phase motor assembly	X		**C**		
65	0D5768	Three phase motor assembly	X		**D**		
65	0D0134	Three phase motor	X		**E**		
65	0D6689	Three phase motor 208-240v 60hz	X		**J**		
66	0D6977	Proximity detector		X			
67	0D0608	Screw C M3x20stainless steel (set x 10)					
67	033986	Washer M3 ACZN 8B (set x 10)					
67	033987	Nut HU M3 stainless steel (set x 10)					
68	0D6353	Microswitch bracket					
69	0D0594	Screw H M6x10 stainless steel (set x 10)					
120	0KJ586	Control board assembly			**J;M**		
121	0D7662	Plastic cap kit			**J;M**		
122	0KL072	Commutator			**J;M**		

TR260 - Exploded view - Body

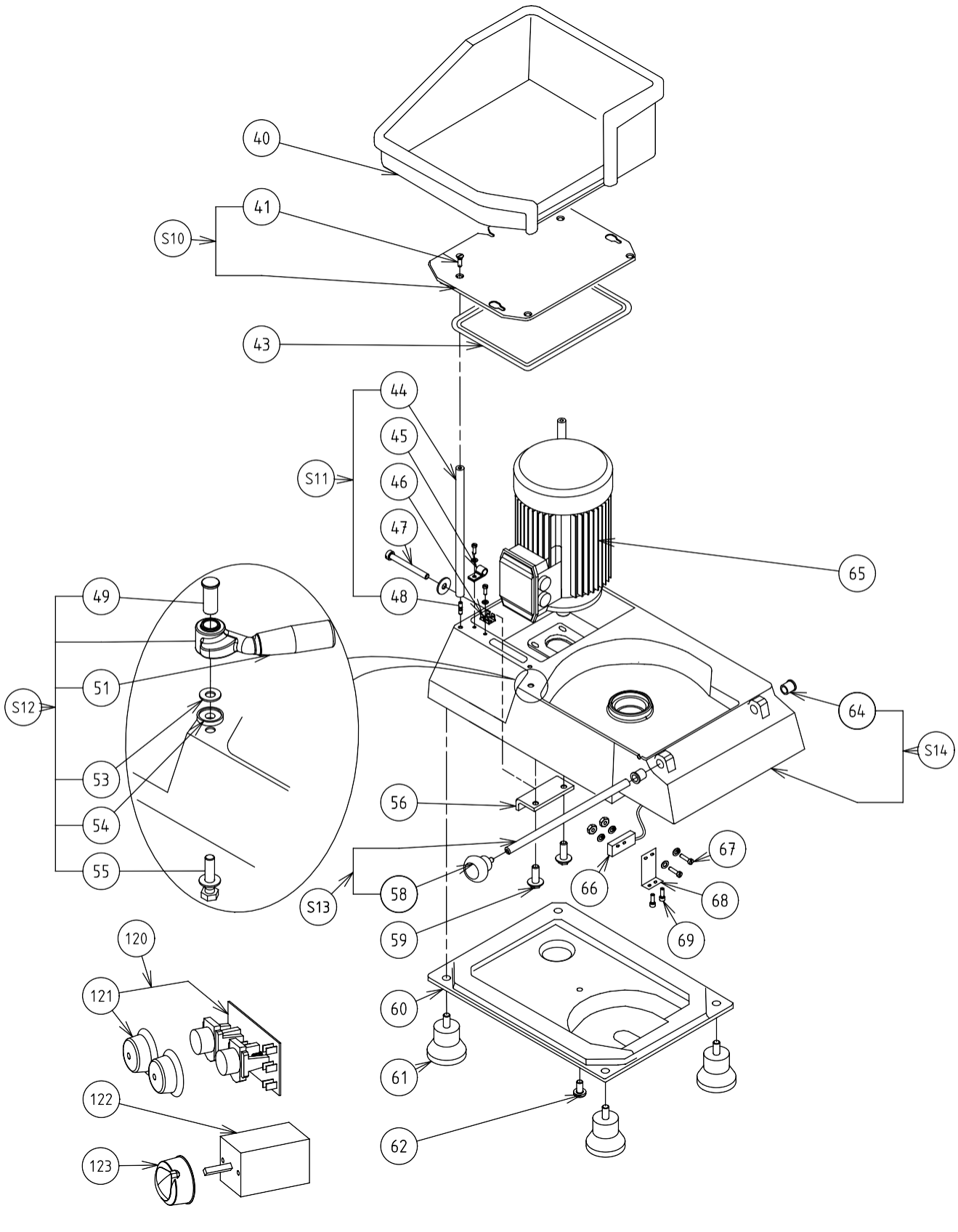

Pos.	Code	Description	V	W&T	Ref.	Notes	S/N break
123	0D1610	Screw TC M4x12 (set x 10)			**J;M**		
S10	0D6098	Cover plate assembly					
S11	0D5769	Set of rod assembly (set x 4)					
S12	0D6402	Bolt assembly					
S13	0KQ673	Spindle assembly		X			
S14	0D5770	Body assembly					
S14	0DF103	Body assembly			**M**		

TR260 - Exploded view - Standard hopper

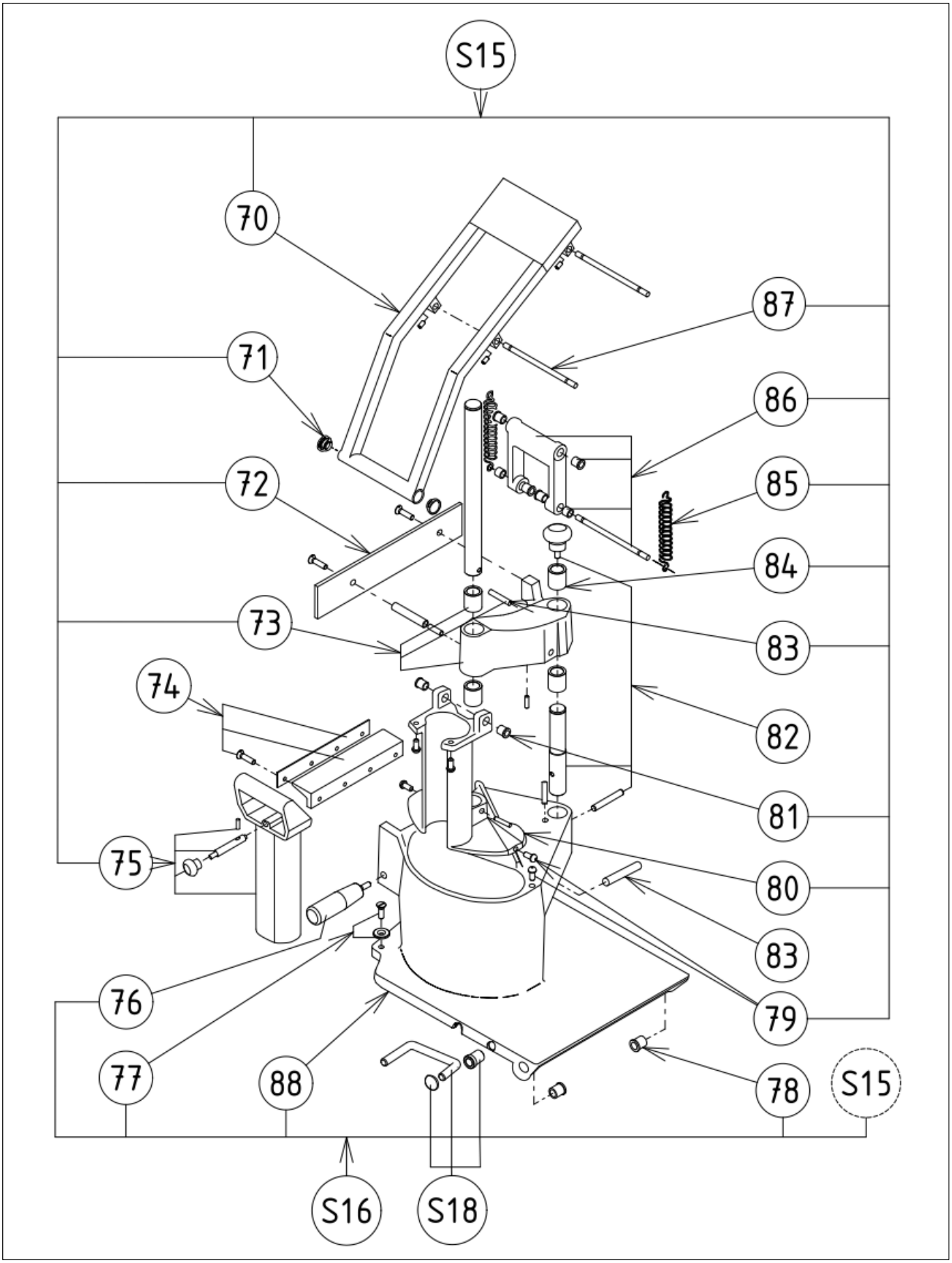

Pos.	Code	Description	V	W&T	Ref.	Notes	S/N break
70	0D2657	Standard lever assembly					
71	0D0027	Winged cap CTX 20					
72	0D5773	Shutter assembly					
73	0D0110	Standard frame assembly					
74	0D5774	Profiled seal assembly					
74	0DF093	Stainless steel flap assembly			M		
75	0KJ761	Pusher assembly	X				
76	0U0482	Handle assembly					
77	0D0911	Bolt pad assembly					
78	0KJ010	Neck ring 10x14x15,5					
79	0KQ699	Set of stops (set x 5)					
79	0DF092	Set of stops (set x 5)			M		
80	0D2659	Standard presser assembly					
81	0KJ599	Hinge ring (set x 5)					
82	0D2660	Swivel pin assembly					
83	0KJ062	Magnet 8x35					
84	0D0031	Rings 22x28x30					
85	0D0912	Set of springs (set x 2)					
86	0D2658	Link rod assembly					
87	0D0029	Hinge pin					
88	0D0740	Hopper					
S15	0D5488	Complete lever assembly					
S16	653036	Complet hopper lever assembly					
S18	0DF875	Hopper kickstand					

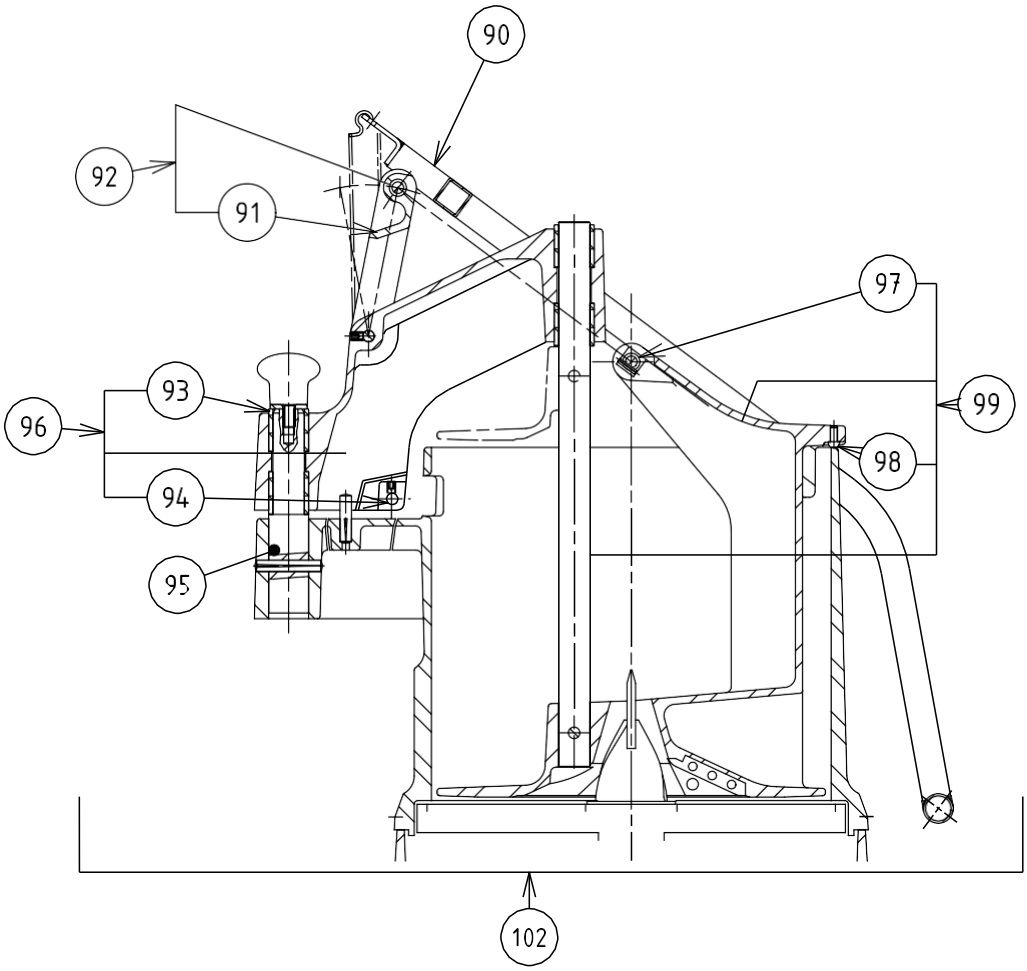
90
92
91
97
93
96
99
98
94
95
102

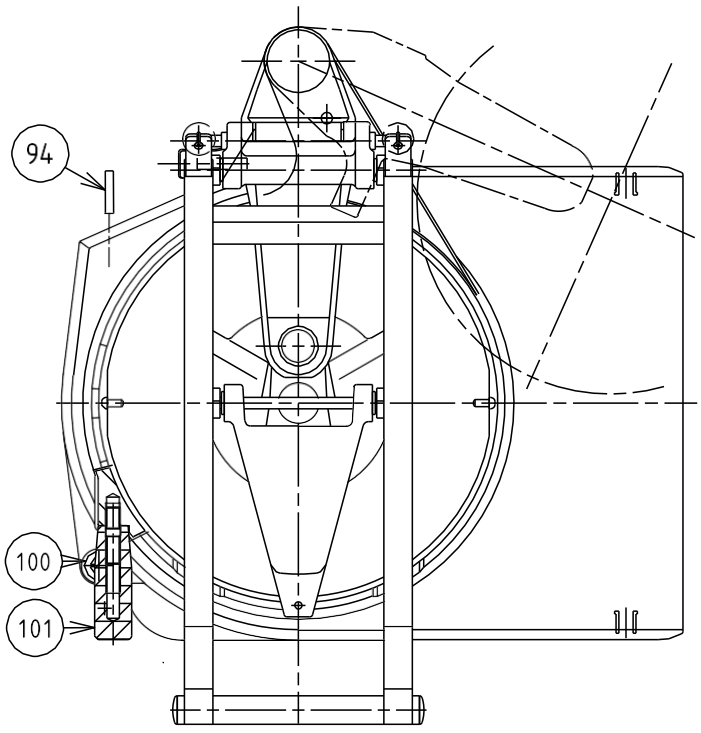
94
100
101

Pos.	Code	Description	V	W&T	Ref.	Notes	S/N break
90	0D5776	Cabbage lever					
91	0D0912	Set of springs (set x 2)					
92	0D2658	Link rod assembly					
93	0D0031	Set of rings 22x28x30					
94	0KJ062	Magnet 8x35					
95	0D2660	Swivel pin assembly					
96	0D5777	Cabbage frame assembly					
97	0KJ599	Hinge ring (set x 5)					
98	0KQ699	Set of stops (set x 5)					
99	0D1570	Cabbage presser assembly					
100	0D0911	Bolt pad assembly					
101	0U0482	Handle assembly					
102	653048	Cabbage equipment					

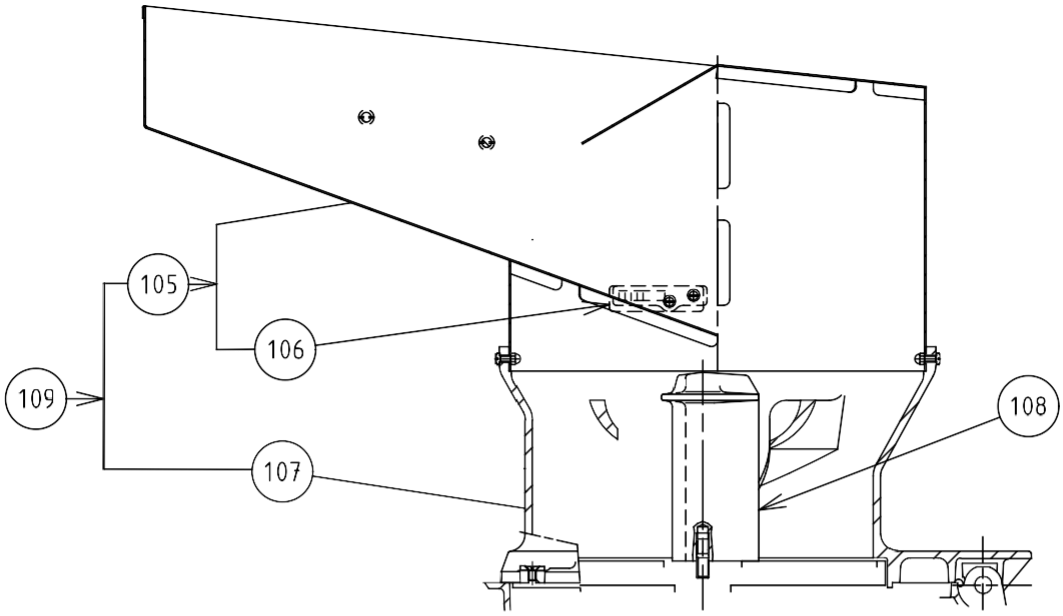
105
106
109
107
108

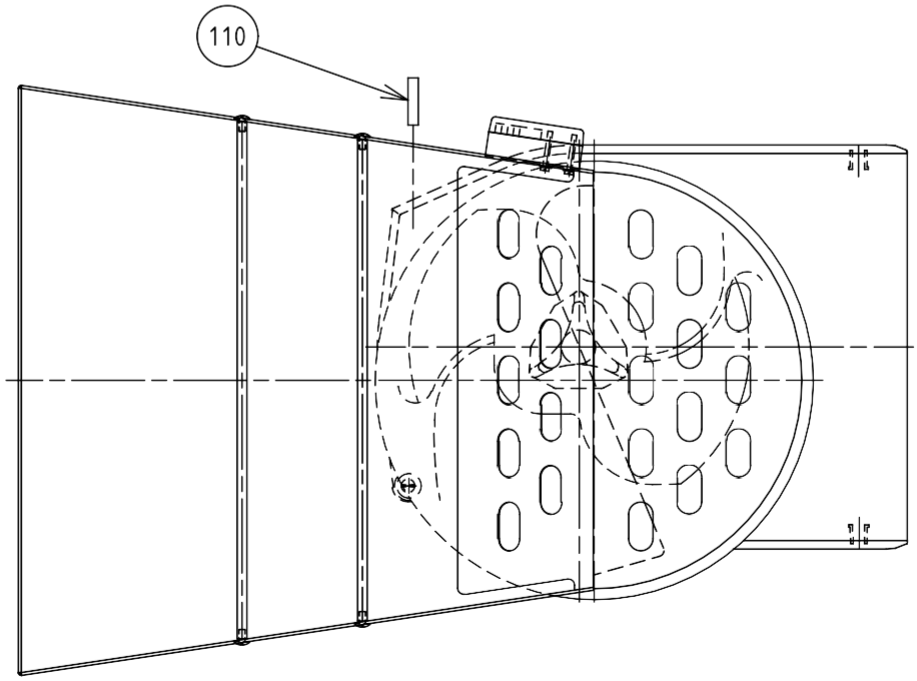
110

Pos.	Code	Description	V	W&T	Ref.	Notes	S/N break
105	0D5778	Loader assembly					
106	0DF027	Automatic hopper safety assembly					
107	0D5779	Ramp assembly					
108	0D2656	Agitator assembly					
109	653037	Complete automatic hopper					
110	0KJ062	Magnet 8x35					

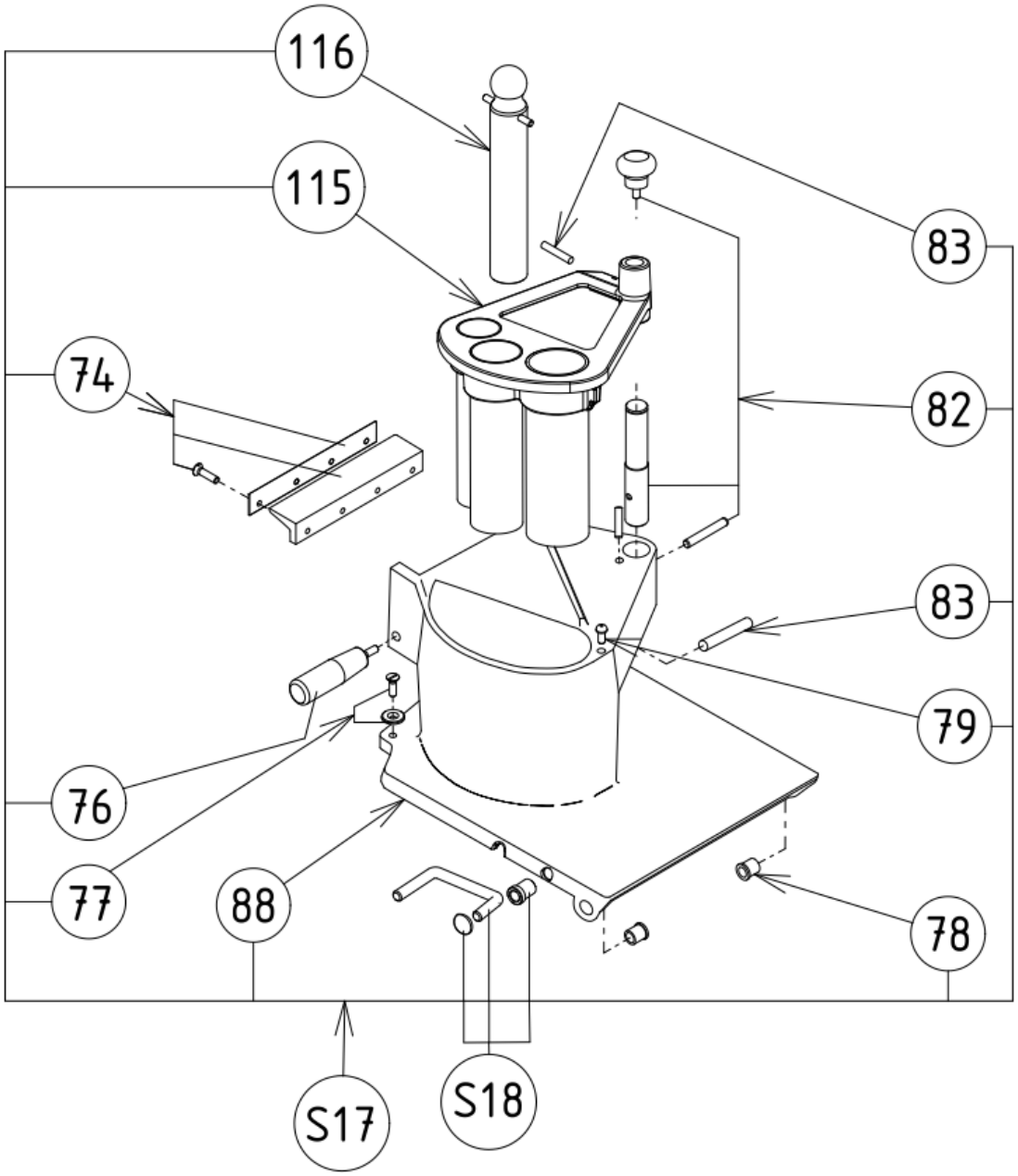
116
115
74
83
82
83
79
76
77
88
78
S17
S18

Pos.	Code	Description	V	W&T	Ref.	Notes	S/N break
74	0D5774	Profiled seal assembly					
76	0U0482	Handle assembly					
77	0D0911	Bolt pad assembly					
78	0KJ010	Neck ring 10x14x15,5					
79	0KQ699	Set of stops (set x 5)					
82	0D2660	Swivel pin assembly					
83	0KJ062	Magnet 8x35					
88	0D0740	Hopper					
115	653223	Long vegetable accessory					
116	0D1954	Pusher	X				
S17	653306	Long vegetable hopper assembly					
S18	0DF875	Hopper kickstand					

CE

Electrolux Professionel SAS
Z.I. du Mont - 23200 AUBUSSON - FRANCE
www.electroluxprofessional.com