LVA100

PNC	Model	Modules	Description	Note
602314	DLVA100N	**A;C;D**	VEGETABLE WASHER & SPIN DRYER-PROGR. - 2/6KG - 220V-240v 50/60HZ	
602315	LVA100N	**B;C;D**	VEGETABLE WASHER & SPIN DRYER-PROGR. - 2/6KG - 220V-240v 50/60HZ	
602367	DLVA100N	**A;C;E**	VEGETABLE WASHER & SPIN DRYER-PROGR. - 2/6KG - 220V-240v 50/60HZ	
602368	LVA100N	**B;C;E**	VEGETABLE WASHER & SPIN DRYER-PROGR. - 2/6KG - 220V-240v 50/60HZ	

LVA100

Modules classifications

A	DITO SAMA
B	ELECTROLUX PROFESSIONAL
C	220-240 50/60HZ
D	WATERJET (V1)
E	WATERJET (V2)

Pag.	Index
4	Exploded view - Structure
5	Parts list - Structure
6	Exploded view - Electrical part
7	Parts list - Electrical part
8	Exploded view - Mechanism
9	Parts list - Mechanism
10	Exploded view - Motor pump
11	Parts list - Motor pump
12	Exploded view - Waterjet
13	Parts list - Waterjet

LVA100 - Exploded view - Structure

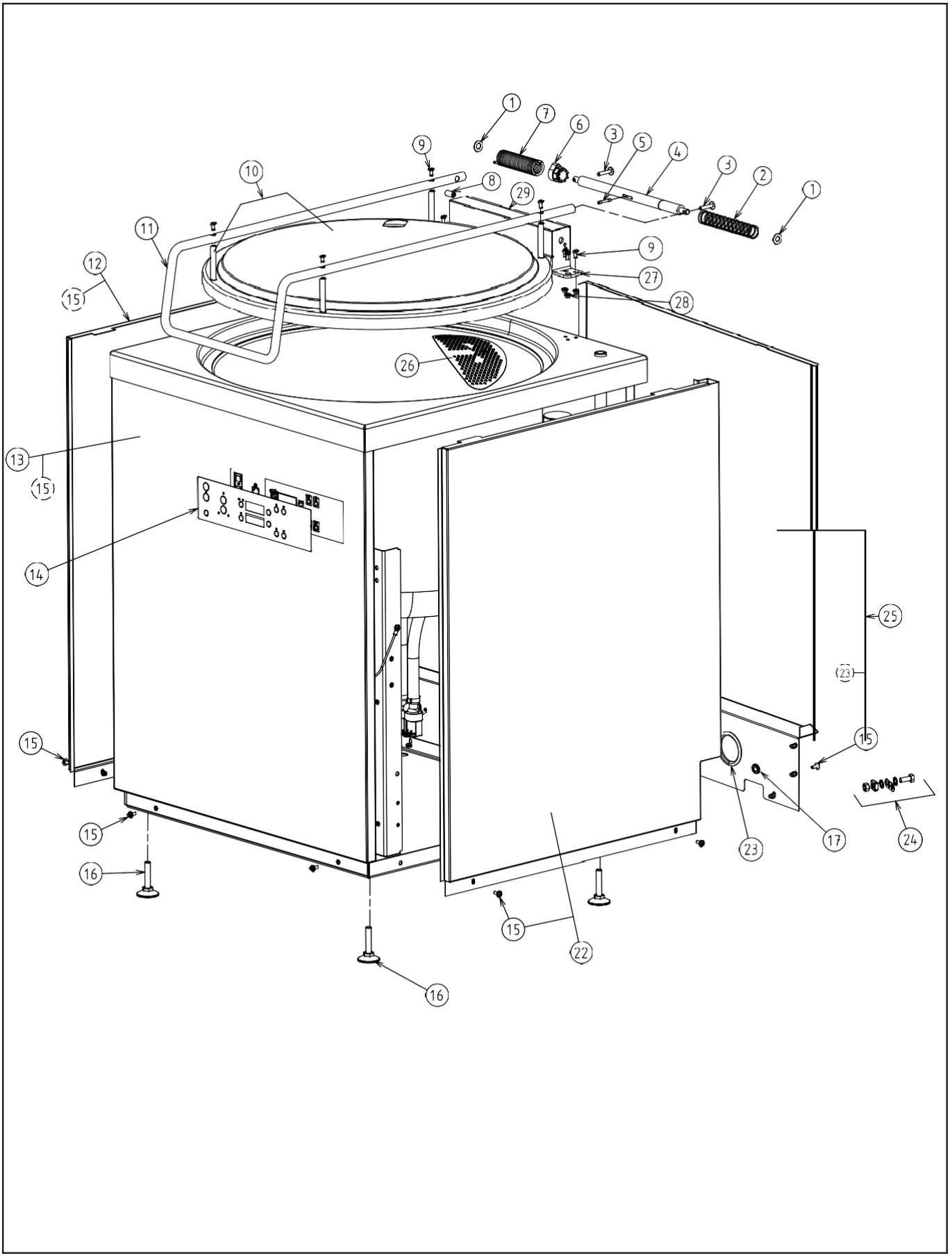

Pos.	Code	Description	V	W&T	Ref.	Notes	S/N break
1	0D1219	Washer					
2	0DF224	Spring					
3	0D6906	Screw RL M6x30 (set x 10)					
4	0DF226	Hinge axis		X			
5	0DF227	Pawl axis					
6	0DF228	Clutch					
7	0DF229	Spring cover		X			
8	0DF278	Opening stopper assembly					
9	0D2228	Screw M5x12 (set x 10)					
10	0DF230	Lid assembly	X				
11	0DF290	Lid handle assembly					
12	0DF231	Left side panel assembly					
13	0DF252	Front panel assembly					
14	0DF253	Control board membrane		X	**A**		
14	0DF254	Control board membrane		X	**B**		
15	0DF101	Screw torx M5x12 (set x 10)					
16	0DF262	Foot (set x 4)					
17	0D6450	Grommet (set x 10)					
22	0DF272	Right side panel assembly					
23	0KQ352	Seal					
24	0DF273	Screw equipotentiel assembly					
25	0DF304	Back side panel assembly					
26	0DF274	Filter grid	X				
27	0DF305	Hinge brackets left/righ					
28	0D8023	Nut HU M5 (set x 10)					
29	0DF306	Hinge cover					

LVA100 - Exploded view - Electrical part

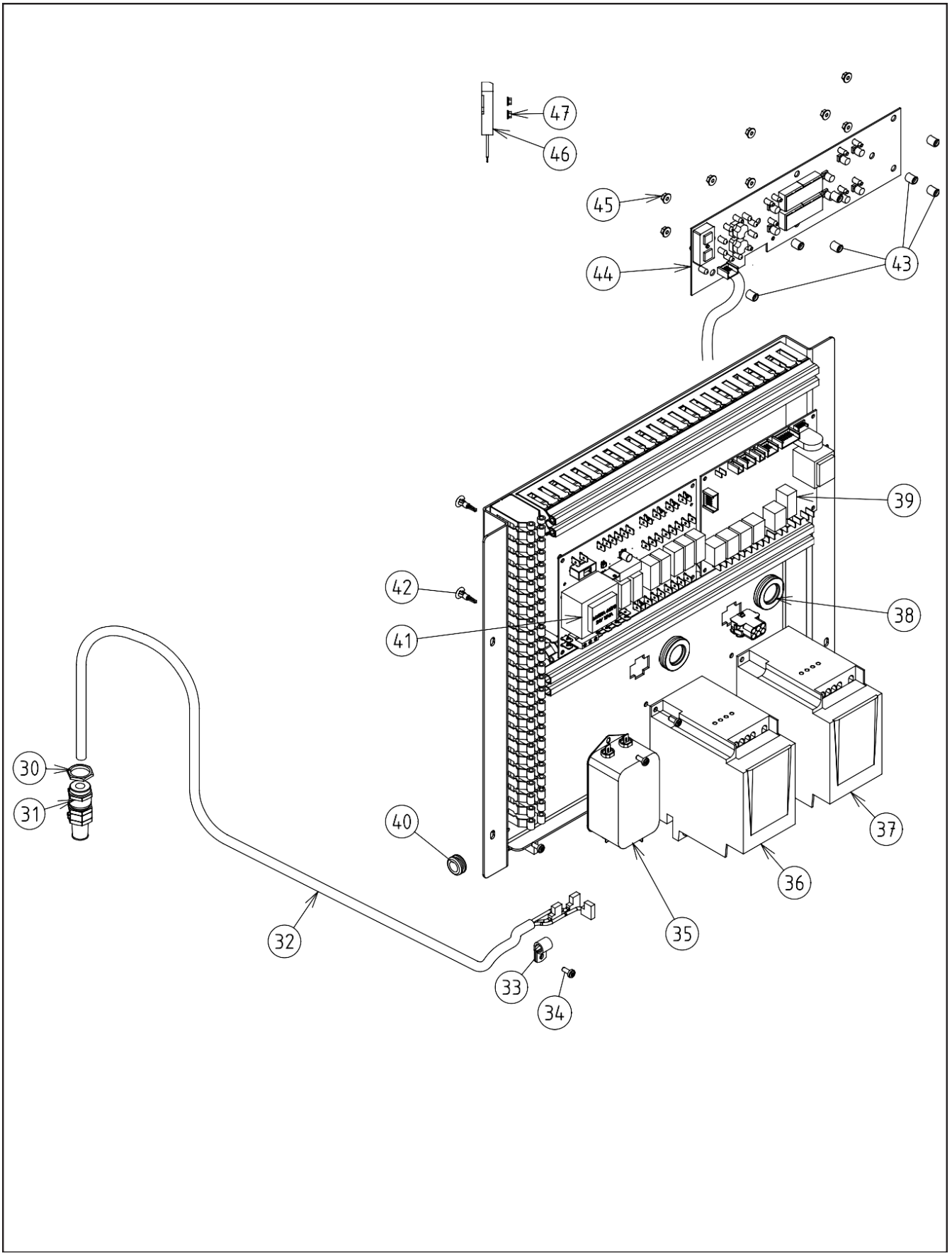

Pos.	Code	Description	V	W&T	Ref.	Notes	S/N break
30	0D3512	Nut (set x 5)					
31	0D2073	Stuffing box assembly					
32	0DF336	Cable	X	X			
33	0D7969	Cable clamp (set x 10)					
34	0D6724	Screw CX M4x10 (set x 10)					
35	0DF337	EMC Filter	X				
36	0DF338	Inverter for main motor	X				
37	0DF339	Inverter for pump	X				
38	0D3031	Grommet 21x62x2 (set x 10)					
39	0C7046	Main board	X				
40	0D6184	Grommet 11x15x3 (set x 5)					
41	0DF340	Auxiliary board	X				
42	0D2848	Printed circuit fix. spacer (set x 6)					
43	0D6225	Spacer 9.5mm (set x 10)					
44	0DF323	Control board with cable	X				
45	0D7990	Nut HUM4 (set x 10)					
46	0DF342	Magnetic switch	X				
47	0D7383	Nut HUM3 (set x 10)					

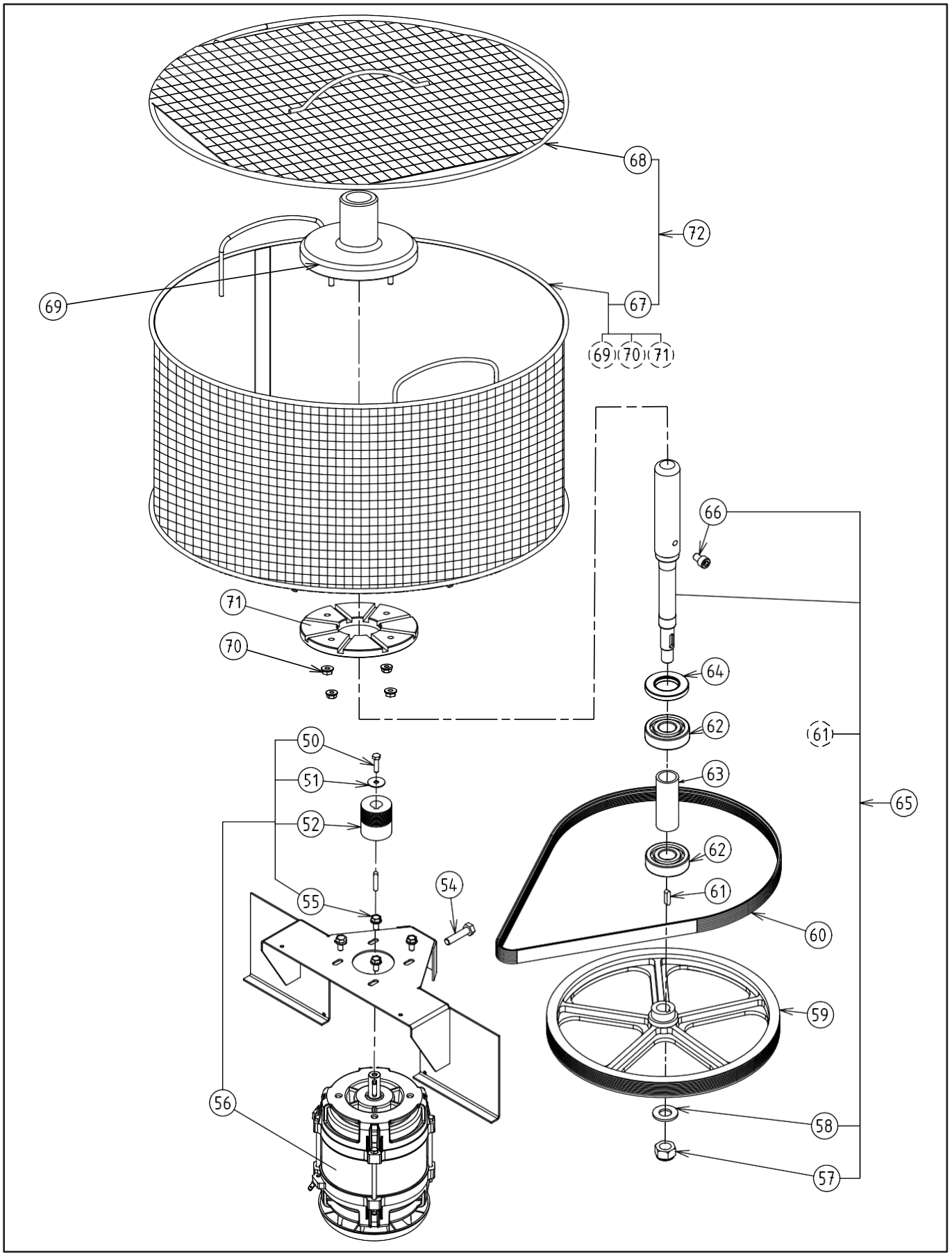
68
72
69
67
69
70
71
71
70
66
64
62
61
50
51
63
65
52
62
54
55
61
60
59
56
58
57

Pos.	Code	Description	V	W&T	Ref.	Notes	S/N break
50	0D2942	Screw TH M5x20 (set x 10)					
51	0D0501	Washer LL5 (set x 10)					
52	0D2452	Drive pulley assembly					
54	0D0591	Screw TH M8x35 (set x 10)					
55	0D6786	Screw TH M6x12 (set x 10)					
56	0DF343	Motor assembly	X				
57	0D0588	Nut M14 (set x 10)					
58	0D0535	Washer M14 (set x 10)					
59	0D2486	Driven pulley					
60	0DF347	Belt poly v 1059j8	X	X			
61	0HD008	Key A5x5x20 (set x 5)					
62	0KQ393	Bearing	X	X			
63	0DF348	Spacer					
64	0DF349	Seal 28x52x7	X	X			
65	0DF350	Shaft assembly					
66	0DF351	Screw TCHC M8x12 (set x 10)					
67	0DF324	Basket equipped	X				
68	0DF325	Lid for basket	X				
69	0DF344	Basket hub					
70	0D8004	Nut HU M6 (set x 10)					
71	0DF326	Basket bottom flange					
72	653883	Basket with lid	X				

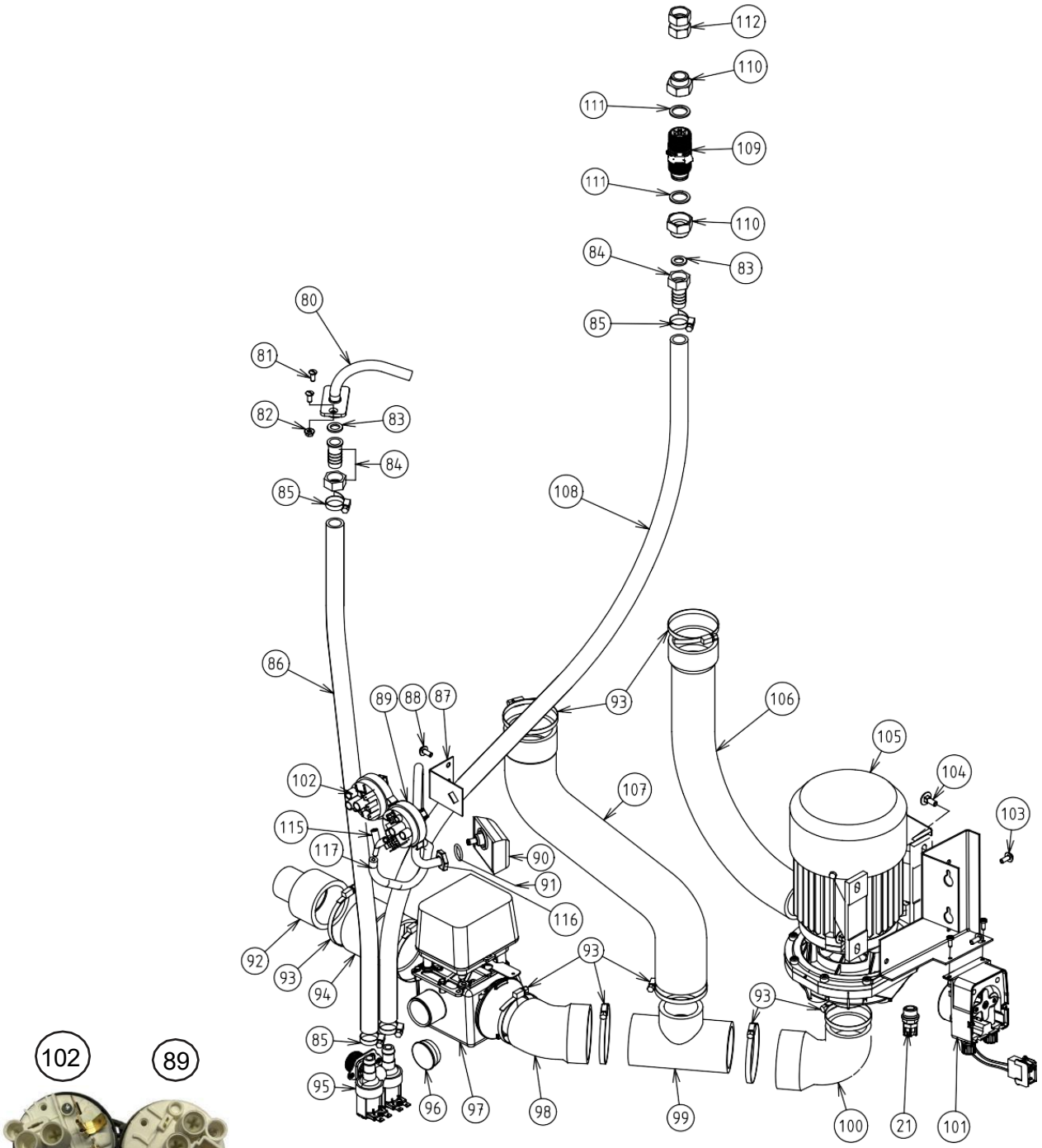
112
110
111
109
111
110
84
83
80
85
81
82
83
84
85
108
86
89
88
87
93
106
105
104
102
107
103
115
117
90
91
116
92
93
94
93
93
85
95
96
97
98
99
100
21
101


102
89

Pos.	Code	Description	V	W&T	Ref.	Notes	S/N break
21	0DF299	Detergent nozzle					
80	0DF345	Water inlet	X				
81	0D2228	Screw TFB M5x12 (set x 10)					
82	0D8023	Nut HU M 5 (set x 10)					
83	0D5294	Seal 15/21 18x12x1.5 (set x 10)		X			
84	0DF353	Hose connector					
85	0DF354	Clamp (set x 5)					
86	0DF355	Flexible hose for water supply					
87	0DF356	Pressure switch bracket					
88	0DF101	Screw M5x12 (set x 10)					
89	0DF327	Pressure switch 60/20	X				
90	0DF328	Air trap					
91	0D2662	Or gasket (set x 5)					
92	0DF357	Reduce drain hose					
93	0D0383	Clamp (set x 5)					
94	0DF358	Exit Hose assembly					
95	0DF359	Solenoid valve	X				
96	0DF330	Valve cap					
97	0DF331	Draining valve	X				
98	0DF360	Hose drain					
99	0DF361	T Hose					
100	0DF362	Hose inlet pump assembly					
101	0DF332	Detergent pump	X				
102	0DF333	Pressure switch 290/200	X				
103	0DF101	Screw M5x12 (set x 10)					
104	0D2741	Screw TRCC M6x16 (set x 10)					
104	0D8004	Nut HU M6 (set x 10)					
105	0DF363	Motor pump	X				
106	0DF364	Sprinkler Hose assembly					
107	0DF365	Suction Hose assembly					
108	0DF368	Flexible hose for water jet					
109	0DF369	Non return valve					
110	0DF881	Connection M15/21-F20/27					
111	0DF352	Seal 20/27 24x18x1.5 (set x 5)		X			
112	0DF371	Connection FF15/21					
115	0DF334	Y connection					
116	0DF335	Nut M14					
117	0DF373	Pressure switch silicon pipe		X			

V1

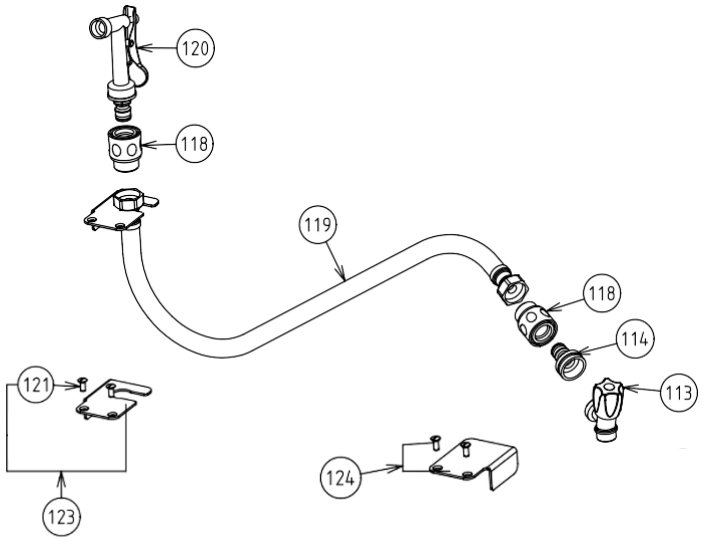
120
118
119
118
114
113
121
124
123

V2

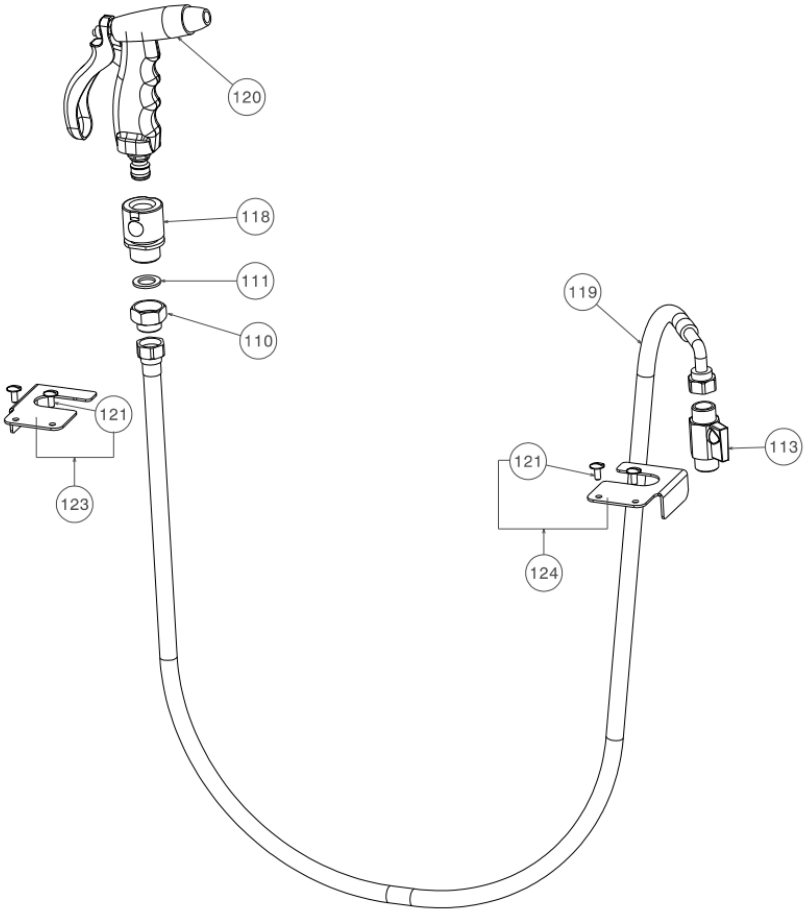
120
118
111
110
121
123
119
113
121
124

V1

Pos.	Code	Description	V	W&T	Ref.	Notes	S/N break
113	0DF378	Waterjet tap			**D**		
114	0DF379	Tap nose			**D**		
118	0DF380	Quick connector			**D,E**		
119	0DF381	Flexible pipe			**D**		
120	0DF382	Waterjet			**D**		
120	0DF880	Waterjet			**D, E**		
121	0U0666	Screw RL M5x12 (set of 10)			**D, E**		
123	0DF383	Left Stop			**D, E**		
124	0DF384	Right Stop			**D, E**		

V2

Pos.	Code	Description	V	W&T	Ref.	Notes	S/N break
110	0DF881	Connection M15/21-F20/27			**E**		
111	0DF352	Seal 20/27 24x18x1.5 (set x 5)		X	**E**		
113	0DF878	Waterjet tap			**E**		
118	0DF380	Quick connector			**D, E**		
119	0DF879	Flexible pipe			**E**		
120	0DF880	Waterjet			**D, E**		
121	0U0666	Screw RL M5x12 (set of 10)			**D, E**		
123	0DF383	Left Stop			**D, E**		
124	0DF384	Right Stop			**D, E**		

CE

Electrolux Professionel SAS
Z.I. du Mont - 23200 AUBUSSON - FRANCE
www.electroluxprofessional.com