Exploded View Of KCNF140WH

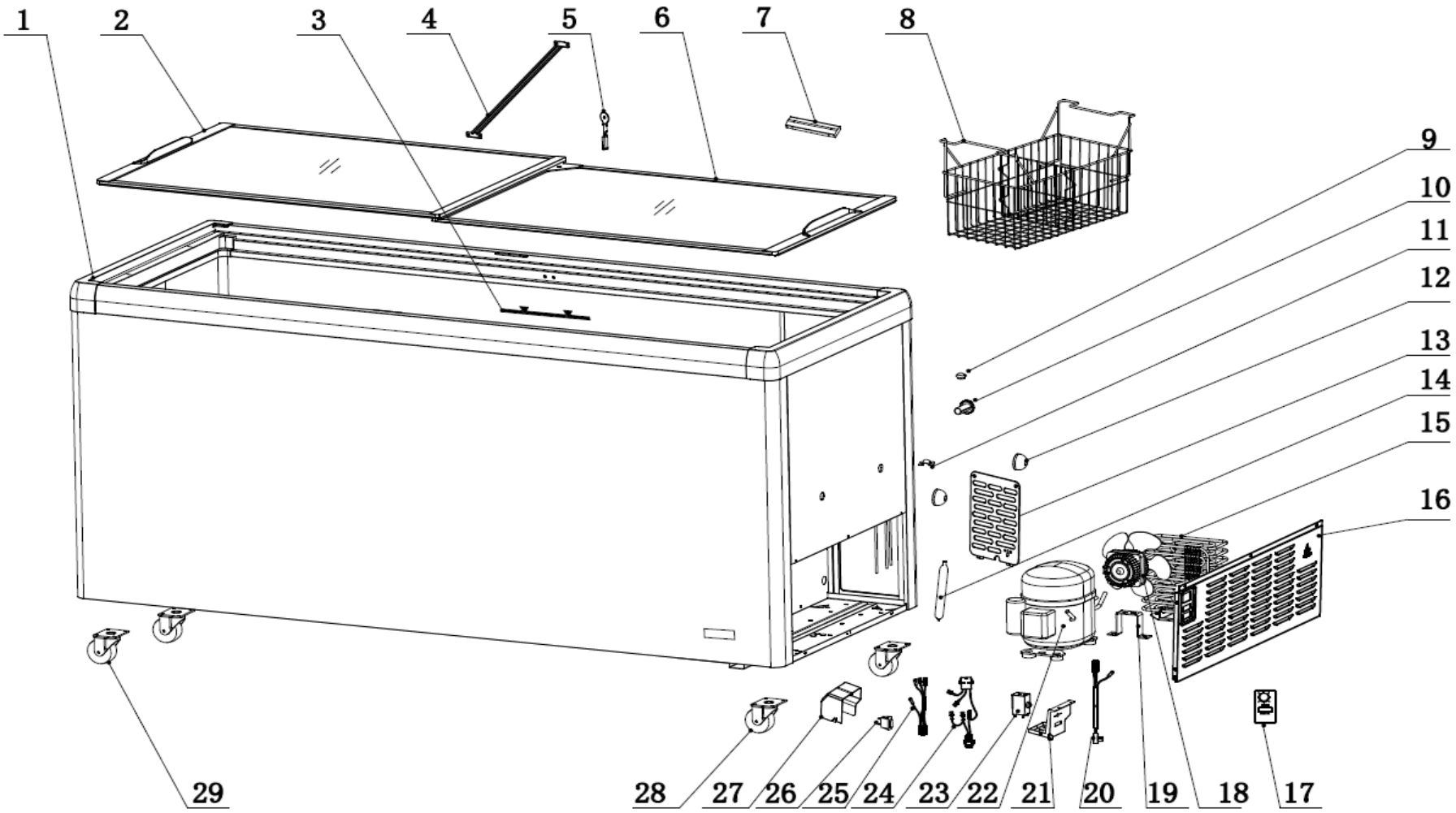

Classification: INTERNAL

Kelvinator COMMERCIAL

Model: KCNF140WH
PNC: 738233
REV: 10/27/2026

Spare Parts List

NO	DESCRIPTION	Serial #	QTY	COMPONENT PNC	Model Number	Model PNC
1	cabinet	ALL	1	N/A	KCNF140WH	738233
2	upper level glass door	ALL	1	0USD72	KCNF140WH	738233
3	load limiter sticker	ALL	1	0USC8N	KCNF140WH	738233
4	cabinet middle rod	< 004152000182	1	0USD73	KCNF140WH	738233
		≥ 004152000182	1	0USO66	KCNF140WH	738233
5	door lock	< 10720007	1	0USD74	KCNF140WH	738233
		≥ 10720007	1	0USDMV	KCNF140WH	738233
6	down glass door	ALL	1	0USD75	KCNF140WH	738233
7	thermometer	ALL	1	0USO74	KCNF140WH	738233
8	basket	ALL	1	0USD77	KCNF140WH	738233
9	discharging pipe Plug	ALL	1	0USC8L	KCNF140WH	738233
10	water discharge tube	ALL	1	0USC8H	KCNF140WH	738233
11	double orifice press block	ALL	1	0USO67	KCNF140WH	738233
12	bumper	ALL	2	0USC8F	KCNF140WH	738233
13	cooling unit rear cover	<02620001	1	0USDAB	KCNF140WH	738233
		≥02620001	1	0USC8D	KCNF140WH	738233
13a	copper tubing	< 005242000182	1	0USC8J	KCNF140WH	738233
		≥005242000182	1	0USO63	KCNF140WH	738233
14	filter dryer	< 005242000182	1	0USD78	KCNF140WH	738233
		≥005242000182	1	0USO64	KCNF140WH	738233
15	external condenser	<003152000482	1	0USD80	KCNF140WH	738233
		≥003152000482	1	0USDL4	KCNF140WH	738233
16	cooling unit side cover panel	< 006332000182	1	0USC8E	KCNF140WH	738233
		≥ 006332000182	1	0USP14	KCNF140WH	738233
16a	plug seat	< 006332000182	1	0USDH6	KCNF140WH	738233
		≥ 006332000182	0	N/A	KCNF140WH	738233
17	control board panel	ALL	1	0USD81	KCNF140WH	738233
18	Fan Motor	ALL	1	0USD69	KCNF140WH	738233
18a	Fan Blade	ALL	1	0USDQO	KCNF140WH	738233
19	fan support KBT	< 004152000182	1	0USD70	KCNF140WH	738233
		≥ 004152000182	1	0USO65	KCNF140WH	738233
20	power cable	ALL	1	0USDL8	KCNF140WH	738233
21	control board KBT	< 03520001	1	0USD89	KCNF140WH	738233
		≥ 03520001	1	0USO73	KCNF140WH	738233
22	compressor	ALL	1	0USD82	KCNF140WH	738233
22a	Relay	ALL	1	0USC8Q	KCNF140WH	738233
22b	Overload	ALL	1	0USC8S	KCNF140WH	738233
22c	Run Capacitor	ALL	1	0USC8Y	KCNF140WH	738233
23	thermostat	ALL	1	0USD83	KCNF140WH	738233
24	control KBT connection wirings	ALL	1	0USD84	KCNF140WH	738233
25	compressor connection wirings	ALL	1	0USD85	KCNF140WH	738233
26	green light module	ALL	1	0USO62	KCNF140WH	738233
27	control board KBT cover panel	ALL	1	0USC8G	KCNF140WH	738233
28	Caster no brake	ALL	2	0USD56	KCNF140WH	738233
29	caster with brake	ALL	2	0USD61	KCNF140WH	738233

Kelvinator

COMMERCIAL

Modelo: KCNF140WH

PNC: 738233

REV: 10/27/2026

Lista de repuestos

NO	DESCRIPCIÓN	de serie #	QTY	COMPONENTE PNC	Número de modelo	Modelo PNC
1	armario	TODO	1	N/A	KCNF140WH	738233
2	puerta de cristal del nivel superior	TODO	1	0USD72	KCNF140WH	738233
3	etiqueta limitadora de carga	TODO	1	0USC8N	KCNF140WH	738233
4	varilla intermedia de armario	< 004152000182	1	0USD73	KCNF140WH	738233
		≥ 004152000182	1	0USO66	KCNF140WH	738233
5	cierre de puerta	< 10720007	1	0USD74	KCNF140WH	738233
		≥ 10720007	1	0USDMV	KCNF140WH	738233
6	puerta de cristal inferior	TODO	1	0USD75	KCNF140WH	738233
7	termómetro	TODO	1	0USO74	KCNF140WH	738233
8	cesto	TODO	1	0USD77	KCNF140WH	738233
9	tapón del tubo de descarga	TODO	1	0USC8L	KCNF140WH	738233
10	tubo de descarga de agua	TODO	1	0USC8H	KCNF140WH	738233
11	bloque de prensado de doble orificio	TODO	1	0USO67	KCNF140WH	738233
12	parachoques	TODO	2	0USC8F	KCNF140WH	738233
13	tapa trasera de unidad refrigerante	<02620001	1	0USDAB	KCNF140WH	738233
		≥02620001	1	0USC8D	KCNF140WH	738233
13a	Tubería de cobre	< 005242000182	1	0USC8J	KCNF140WH	738233
		≥005242000182	1	0USO63	KCNF140WH	738233
14	secador de filtros	< 005242000182	1	0USD78	KCNF140WH	738233
		≥005242000182	1	0USO64	KCNF140WH	738233
15	condensador externo	<003152000482	1	0USD80	KCNF140WH	738233
		≥003152000482	1	0USDL4	KCNF140WH	738233
16	panel de cubierta lateral de la unidad de refrigeración	< 006332000182	1	0USC8E	KCNF140WH	738233
		≥ 006332000182	1	0USP14	KCNF140WH	738233
16a	asiento de enchufe	< 006332000182	1	0USDH6	KCNF140WH	738233
		≥ 006332000182	0	N/A	KCNF140WH	738233
17	panel de placa de control	TODO	1	0USD81	KCNF140WH	738233
18	Motor del ventilador	TODO	1	0USD69	KCNF140WH	738233
18a	Pala de ventilador	TODO	1	0USDQO	KCNF140WH	738233
19	soporte de ventilador KBT	< 004152000182	1	0USD70	KCNF140WH	738233
		≥ 004152000182	1	0USO65	KCNF140WH	738233
20	cable de alimentación	TODO	1	0USDL8	KCNF140WH	738233
21	placa de control KBT	< 03520001	1	0USD89	KCNF140WH	738233
		≥ 03520001	1	0USO73	KCNF140WH	738233
22	compresor	TODO	1	0USD82	KCNF140WH	738233
22a	Relé	TODO	1	0USC8Q	KCNF140WH	738233
22b	Sobrecarga	TODO	1	0USC8S	KCNF140WH	738233
22c	Condensador de funcionamiento	TODO	1	0USC8Y	KCNF140WH	738233
23	termostato	TODO	1	0USD83	KCNF140WH	738233
24	cableados de conexión KBT de control	TODO	1	0USD84	KCNF140WH	738233
25	cableados de conexión del compresor	TODO	1	0USD85	KCNF140WH	738233
26	módulo luminoso verde	TODO	1	0USO62	KCNF140WH	738233
27	panel de cubierta de placa de control KBT	TODO	1	0USC8G	KCNF140WH	738233
28	Rueda sin freno	TODO	2	0USD56	KCNF140WH	738233
29	rueda con freno	TODO	2	0USD61	KCNF140WH	738233