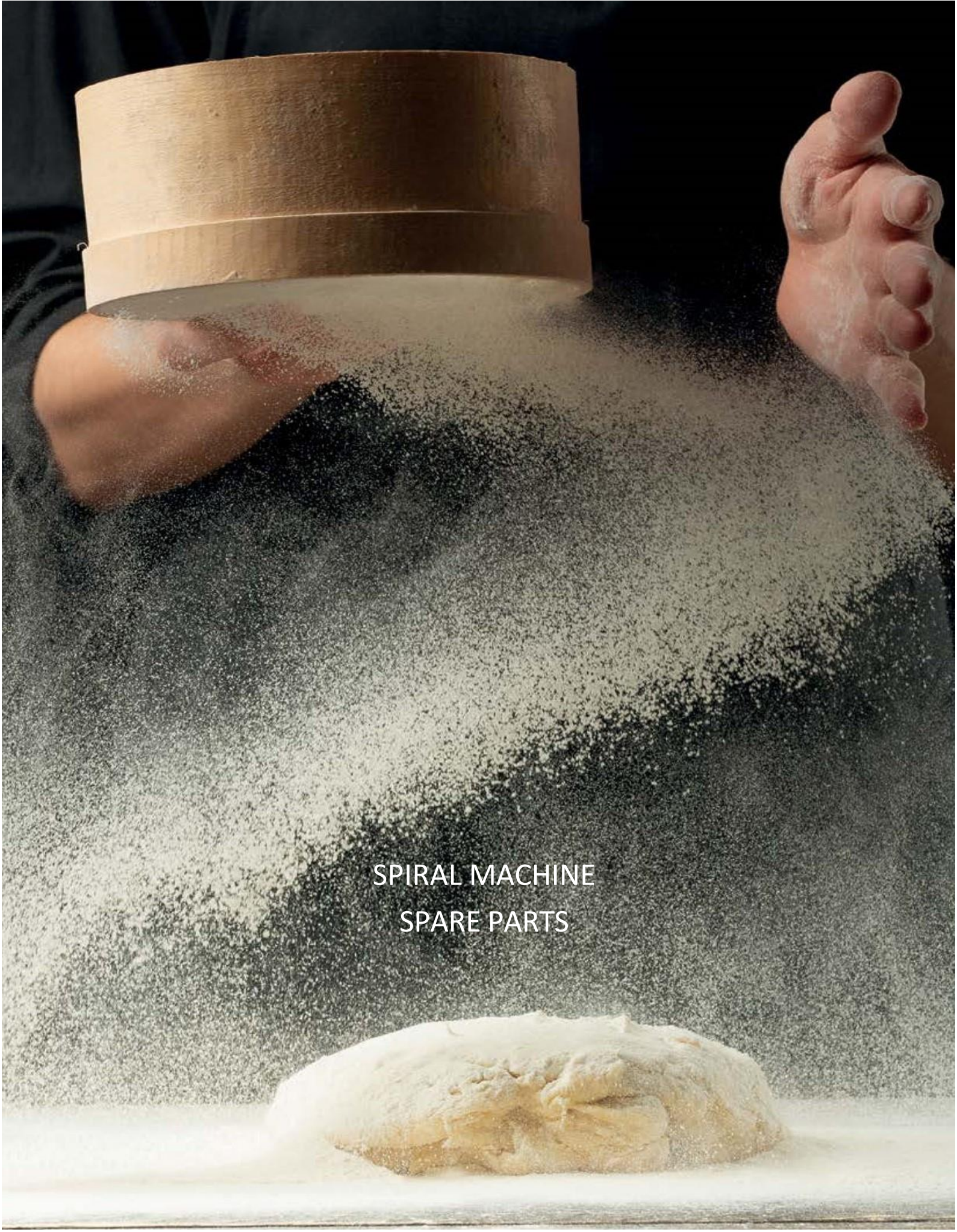
SPIRAL MACHINE
SPARE PARTS

INDEX

PNC	Model	Description	Name	Page
602276	ESK10L	SPIRAL DOUGH KNEADER - 10LT - 1 SPEED	L10	3
602282	DSK10L			
602277	ESK22L	SPIRAL DOUGH KNEADER - 22LT - 2 SPEED	L22	11
602283	DSK22L			
602278	ESK33L	SPIRAL DOUGH KNEADER - 33LT - 2 SPEED	L33	19
602284	DSK33L			
602279	ESK42L	SPIRAL DOUGH KNEADER - 42LT - 2 SPEED	L42	27
602285	DSK42L			
602280	ESK53L	SPIRAL DOUGH KNEADER - 53LT - 2 SPEED	L53	36
602286	DSK53L			
602281	ESK62L	SPIRAL DOUGH KNEADER - 62LT - 2 SPEED	L62	45
602287	DSK62L			
602353	ESKTH22L	SPIRAL DOUGH KNEADER, 22LT REMOVABLE BOWL/ TILTING HEAD, 2SPEED, 380-415V / 3 / 50HZ	LR22	54
602356	DSKTH22L			
602354	ESKTH33L	SPIRAL DOUGH KNEADER, 33LT REMOVABLE BOWL/ TILTING HEAD, 2SPEED, 380-415V / 3 / 50HZ	LR33	64
602357	DSKTH33L			
602355	ESKTH42L	SPIRAL DOUGH KNEADER, 42LT REMOVABLE BOWL/ TILTING HEAD, 2SPEED, 380-415V / 3 / 50HZ	LR42	74
602358	DSKTH42L			

L10

L10

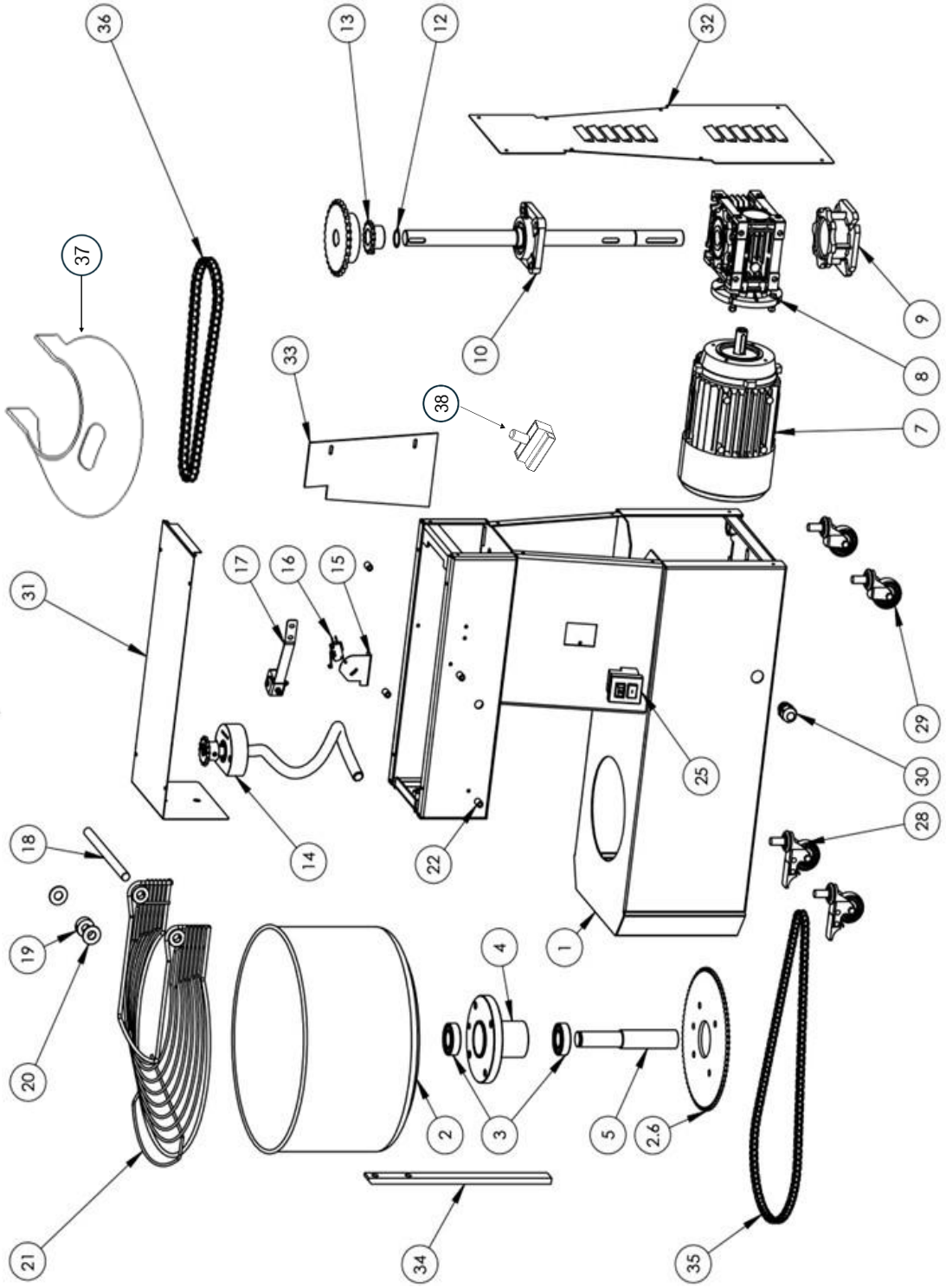
36
13
12
32
37
10
9
8
33
38
7
31
17
16
15
29
25
30
14
22
28
18
1
19
4
20
2
3
5
2.6
21
34
35

L10

Pos.	Qty.	Code	Item	Description	V	W&T
1	1	0DF800	CIL00001	L10 STRUCTURE		
2	1	0DF190	CIL00021	BOWL L10 260 x 200		
3	2	0KQ394	CIL00093	BEARING 6205 2RS		X
4	1	0DF191	CIL00074	BOWL SUPPORT L10		
5	1	0DF192	CIL00066	BOWL SUPPORT SHAFT L10		
6	1	0DF193	CIL00079	BOWL CROWN L10 Z65 3/8”		
7	1	0DF194	CIL00045	MOTOR L10 230V – 0.37Kw	X	
8	1	0DF195	CIL00055	GEAR BOX	X	
9	1	0DF196	CIL00058	REDUCER FLANGE S40 (L10)		X
10	1	0DF197	CIL00077	UCF204 (D20mm) (DRIVE SHAFT SUPPORT)		X
11	1	0DF198	CIL00061	TRANSMISSION SHAFT L10		
12	2	0D0650	BIL00008	EXTERNAL SEEGER D20		
13	1	0DF200	CIL00087	DRIVE PINION BOWL L10 Z14 3/8" D20		X
14	1	0DF201	CIL00140	SPIRAL ASSEMBLY L10		X
15	1	0DF202	CIL00114	LID MICROSWITCH BRACKET L10		
16	1	0DF203	CIL00113	MICROSWITCH D3V-166-1C5	X	
17	1	0DF204	CIL00123	CHAIN TENSIONER ASSEMBLY		
18	1	0DF205	CIL00068	LID SHAFT L10		
19	1	0DF206	CIL00038	MICROSWITCH HUB		
20	2	0DF801	CIL00127	NYLON LID WASHER		
21	1	0DF208	CIL00231	LID L10		
22	4	0DF209	CIL00104	PLASTIC STOP SPACER 10X15		
25	1	0DF210	CIL00110	SINGLE-PHASE SWITCH		
28	2	0DF211	CIL00106	WHEEL WITH BRAKE D50 M12		
29	2	0DF212	CIL00107	UNBRAKED WHEEL D50M12		
30	1	0DF213	CIL00119	PLASTIC CABLE GLAND M20 x 1.5		
31	1	0DF802	CIL00002	UPPER PANEL L10		
32	1	0DF803	CIL00003	REAR PANEL L10		
33	1	0DF804	CIL00004	SIDE PANEL L10		
34	1	0DF377	CIL00040	DOUGH REMOVER PIN L10		
35	1	0DF218	CIL00099	BOWL CHAIN L10 3/8” 69P		X
36	1	0DF219	CIL00094	SPIRAL CHAIN 3/82 69P		X
37	1	0DF220	CIL00264	LID COVER		
38	1	0DF374	CIL00274 + CIL00269	FUSE HOLDER + FUSE	X	
38	1	0DF805	CIL00269	FUSE 3.3 A	X	

L10 BOWL ASSEMBLY

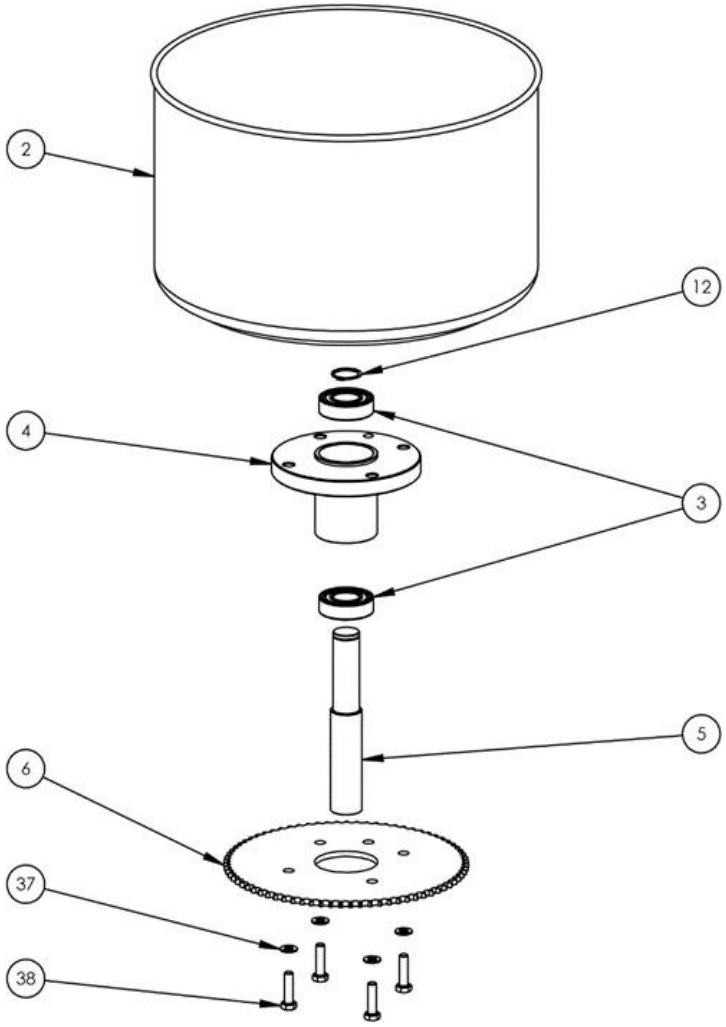

Pos.	Qty.	Code	Item	Description	V	W&T
2	1	0DF190	CIL00021	BOWL L10 260 x 200		
3	2	0KQ394	CIL00093	BEARING 6205 2RS		X
4	1	0DF191	CIL00074	BOWL SUPPORT L10		
5	1	0DF192	CIL00066	BOWL SUPPORT SHAFT L10		
6	1	0DF193	CIL00079	BOWL CROWN L10 Z65 3/8”		X
12	1	0D0650	BIL00008	EXTERNAL SEEGER D20		
37	4	0KQ524	BIL00035	FLAT WASHER 8 ZN		
38	4	0D2329	BIL00034	HEX HEAD SCREW M8 x 30 ZN		

L10 SPIRAL ASSEMBLY

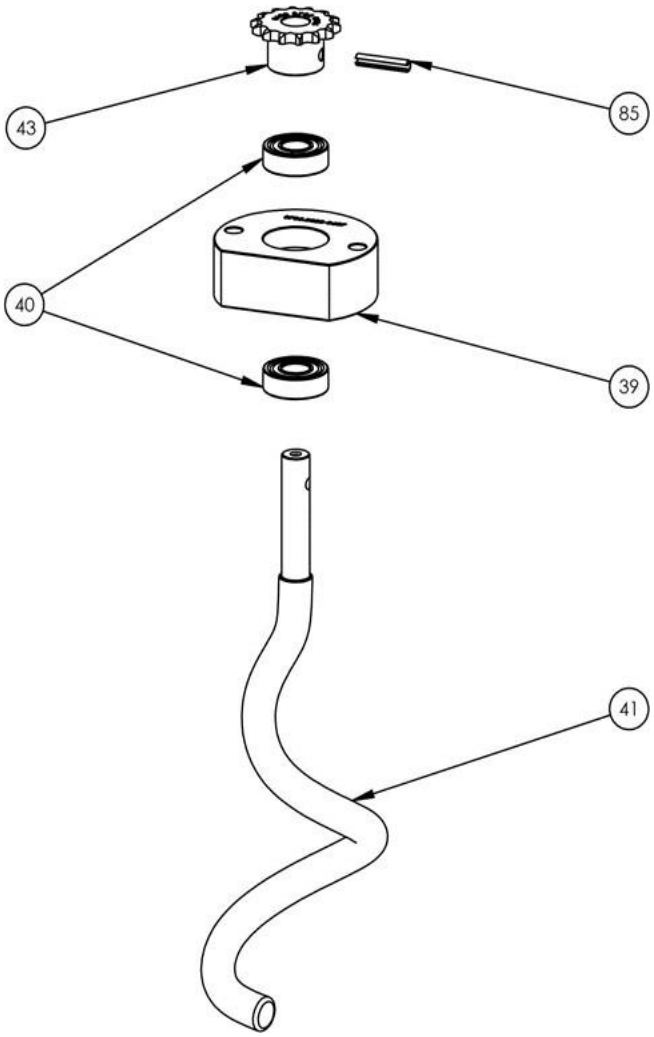

Pos.	Qty.	Code	Item	Description	V	W&T
39	1	0DF221	CIL00071	SPIRAL SUPPORT L10		
40	1	0D0035	CIL00090	BEARING 6202 2RS		X
41	1	0DF222	CIL00027	SPIRAL L10		
43	1	0DF223	CIL00082	SPIRAL PINION L10 Z14 3/8” D15		X
85	1	0D0400	BIL00006	ROLL PIN 6 x 30		

L10 DRIVE SHAFT ASSEMBLY

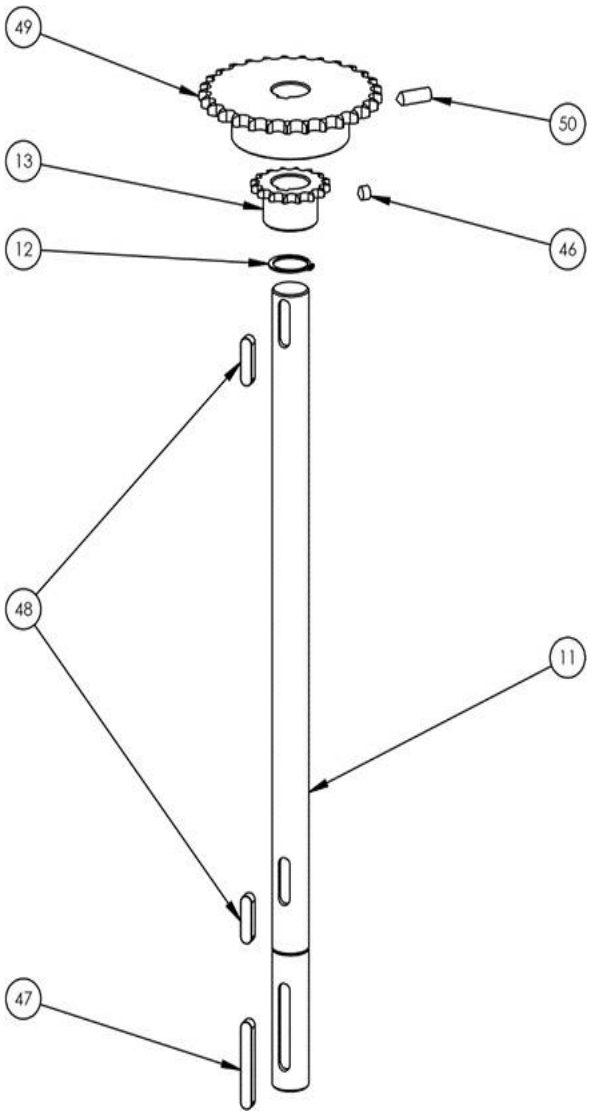

Pos.	Qty.	Code	Item	Description	V	W&T
11	1	0DF198	CIL00061	DRIVE SHAFT L10		
12	1	0D0650	BIL00008	EXTERNAL SEEGER D20		
13	1	0DF200	CIL00087	BOWL DRIVE PINION L10 Z14 3/8” D20		X
46	1	0D0559	BIL00020	M8 x 8 POINT GRUB SCREW UNPROCESSED		
47	1	0D5128	BIL00003	INTERLOCKING TAB 6 x 40		
48	2	0KQ486	BIL00004	INTERLOCKING TAB 6 x 30		
49	1	0DF225	CIL00085	SPIRAL DRIVE PINION L10 Z25 3/8” D20		X
50	1	0DF073	BIL00021	M8 x 25 POINT GRUB SCREW UNPROCESSED		

L10 LID ASSEMBLY

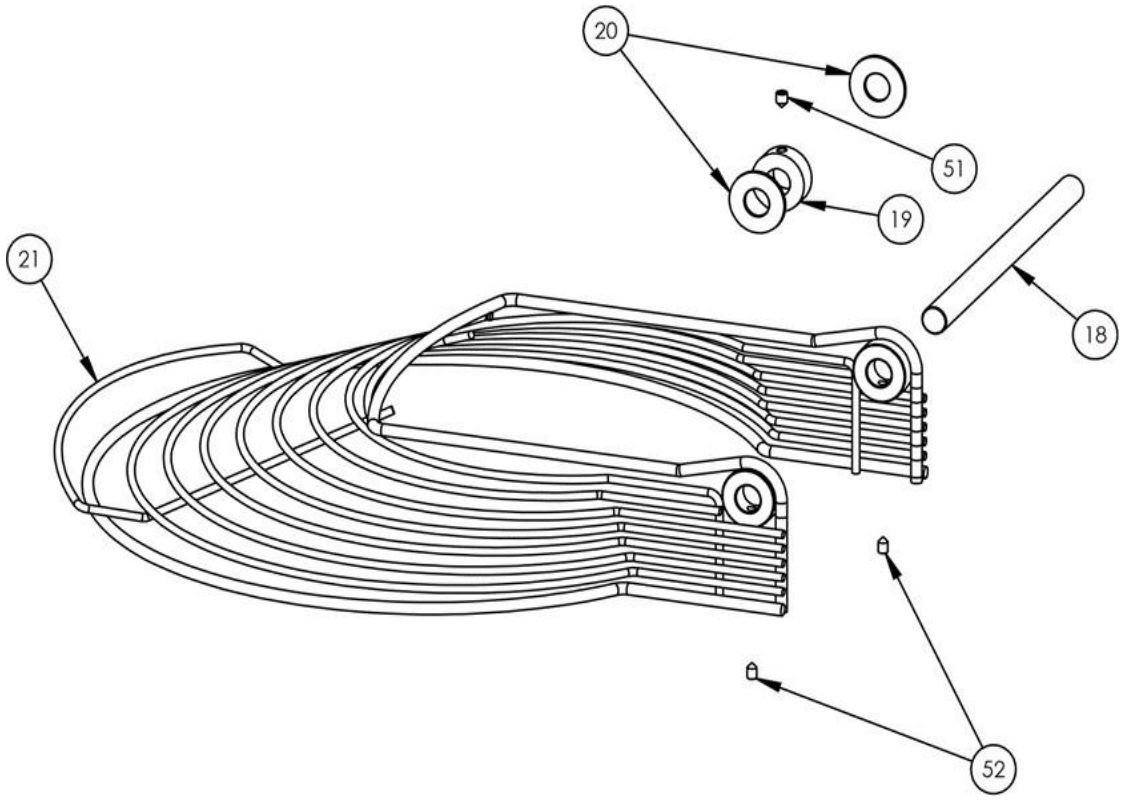

Pos.	Qty.	Code	Item	Description	V	W&T
18	1	0DF205	CIL00068	LID SHAFT L10		
19	1	0DF206	CIL00038	MICROSWITCH HUB		
20	2	0DF801	CIL00127	NYLON WASHER FOR GRILLED LID		
21	1	0DF208	CIL00231	LID L10		X
51	1	0D0545	BIL00019	POINT GRUB SCREW M6 x 8 ZN		
52	2	0D2109	BIL00018	POINT GRUB SCREW M6 x 8 ZN		

L10 MICROSWITCH ASSEMBLY

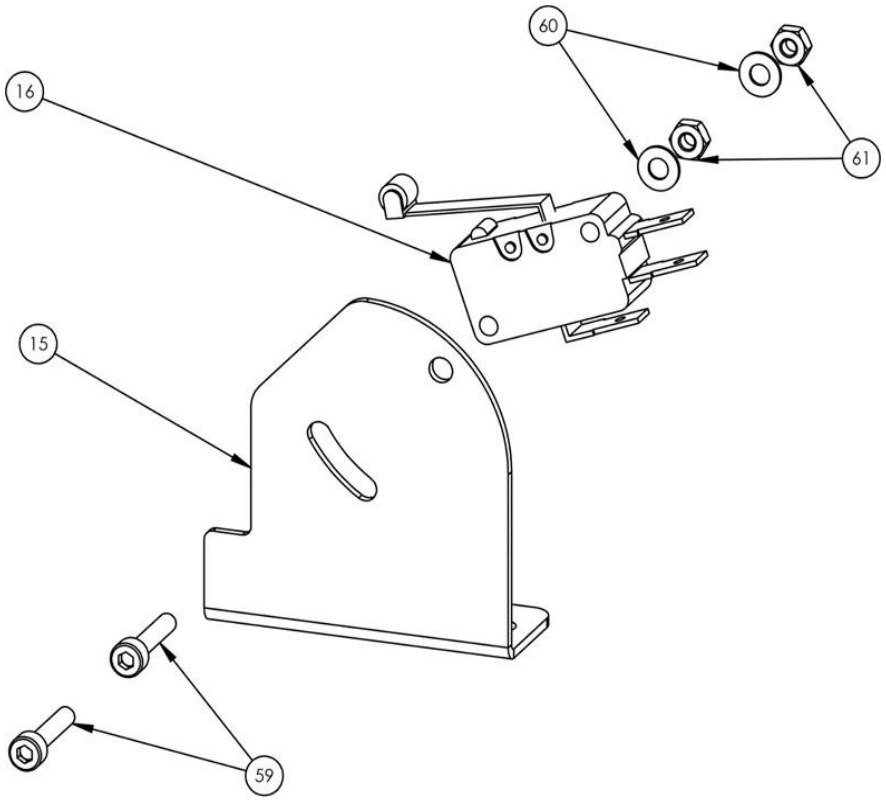

Pos.	Qty.	Code	Item	Description	V	W&T
15	1	0DF202	CIL00114	LID MICROSWITCH BRACKET L10		
16	1	0DF203	CIL00113	MICROSWITCH D3V-166-1C5	X	
59	2	0KQ511	BIL00015	SOCKET HEAD SCREW M3 x 16 A2		
60	2	0D5620	BIL00043	FLAT WASHER 3 x 7 x 0.5		
61	2	033987	BIL00016	NUT M3 A2		

L22

L22

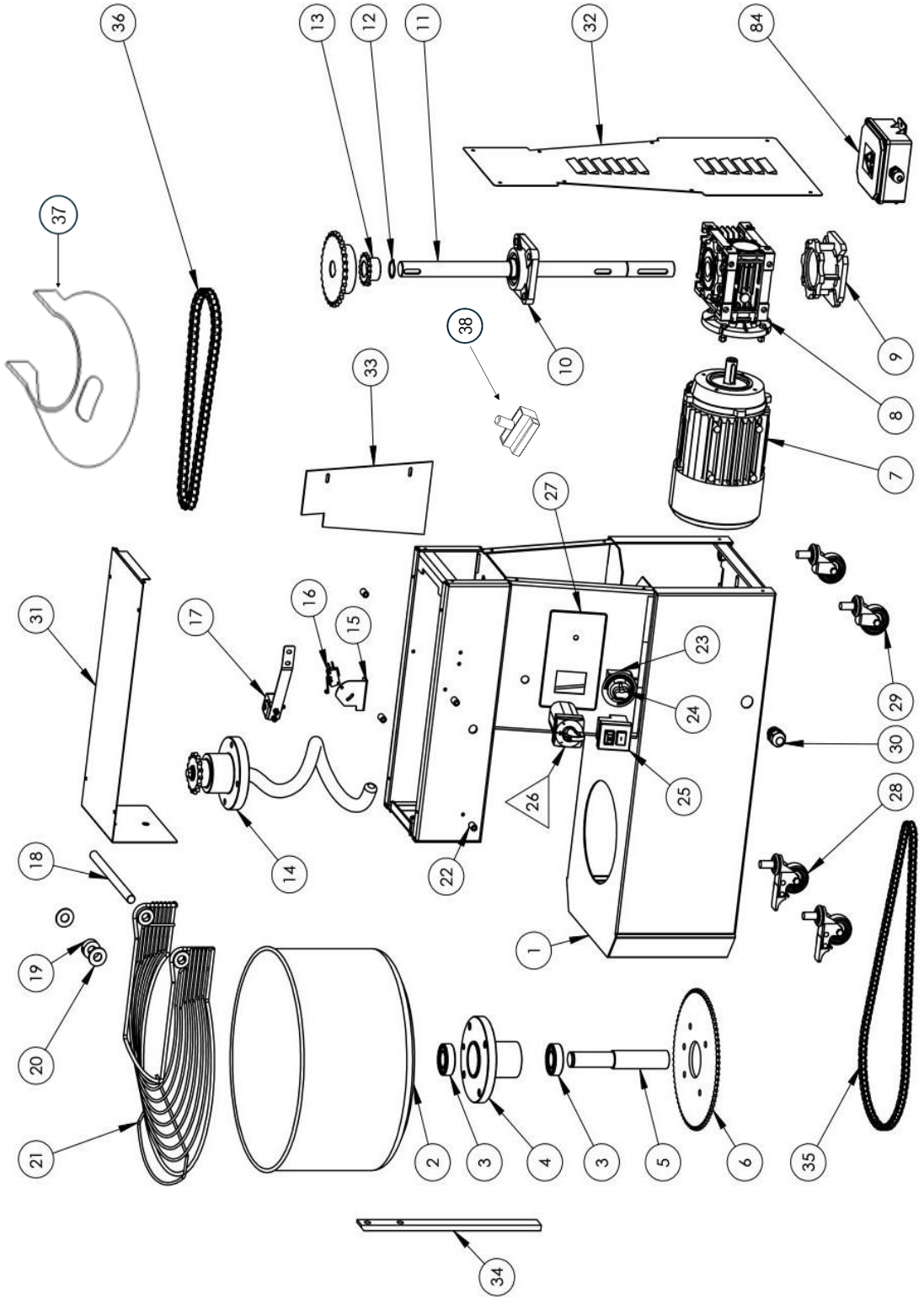
36
13
12
11
32
84
37
38
10
9
33
8
7
27
31
17
16
15
23
24
29
30
26
25
28
14
22
18
1
19
20
21
2
3
4
3
5
6
35
34

L22

Pos.	Qty.	Code	Item	Description	V	W&T
1	1	0DF806	CIL00005	STRUCTURE		
2	1	0DF232	CIL00022	BOWL		
3	2	0KQ394	CIL00093	BEARING 6205 2RS		X
4	1	0DF233	CIL00075	SHARED BOWL SUPPORT		
5	1	0DF234	CIL00067	SHARED BOWL SUPPORT SHAFT		
6	1	0DF235	CIL00080	BOWL CROWN		
7	1	0DF236	CIL00048	MOTOR	X	
8	1	0DF237	CIL00056	GEAR BOX	X	
9	1	0DF238	CIL00059	REDUCER FLANGE		X
10	1	0DF239	CIL00078	DRIVE SHAFT SUPPORT		X
11	1	0DF240	CIL00062	DRIVE SHAFT		
12	1	0KQ499	BIL00007	EXTERNAL SEEGER D25mm		X
13	1	0DF242	CIL00088	BOWL DRIVE PINION		X
14	1	0DF243	CIL00141	SPIRAL ASSEMBLY		
15	1	0DF244	CIL00115	MICROSWITCH BRACKET		
16	1	0DF203	CIL00113	MICROSWITCH D3V-166-1C5	X	
17	1	0DF204	CIL00123	CHAIN TENSIONER ASSEMBLY		
18	1	0DF245	CIL00069	LID SHAFT		
19	1	0DF206	CIL00038	MICROSWITCH HUB		
20	2	0DF801	CIL00127	NYLON LID WASHER		
21	1	0DF246	CIL00232	LID		
22	2	0DF209	CIL00104	PLASTIC STOP SPACER 10 x 15		
23	1	0DF247	CIL00112	TEMPOMATIC TIMER M1 130 M10 SM-T		
24	1	0DF248	MANOP005	NON-GRAD. BLACK KNOB		
25	1	0DF210	CIL00110	BUTTON 0-1		
25	1	0DF249	CIL00111	BUTTON 0-1 400V		
25	1	0DF807	CIL00162	BUTTON 0-1 230V		
26	1	0DF250	CIL000116	SPEED SELECTOR		
27	1	0DF251	CIL00144	SCREEN-PRINTED ADHESIVE LABEL		
28	2	0DF211	CIL00106	WHEEL WITH BRAKE D50 M12		
29	2	0DF212	CIL00107	UNBRAKED WHEEL D50 M12		
30	1	0DF213	CIL00119	PLASTIC CABLE GLAND M20 x 1.5		
31	1	0DF808	CIL00006	UPPER PANEL		
32	1	0DF809	CIL00007	REAR PANEL		
33	1	0DF810	CIL00008	SIDE PANEL		
34	1	0DF255	CIL00041	DOUGH REMOVER PIN		
35	1	0DF256	CIL00100	BOWL CHAIN		X
36	1	0DF317	CIL00095	SPIRAL CHAIN		
37	1	0DF258	CIL00265	LID COVER		X
38	1	0DF375	CIL00274 + CIL00270	FUSE HOLDER + FUSE		
38	1	0DF811	CIL00270	FUSE	X	
84	1	0DF316	CIL00240	THREE PHASE ELECTRICAL SYSTEM BOX	X	

L22 BOWL ASSEMBLY

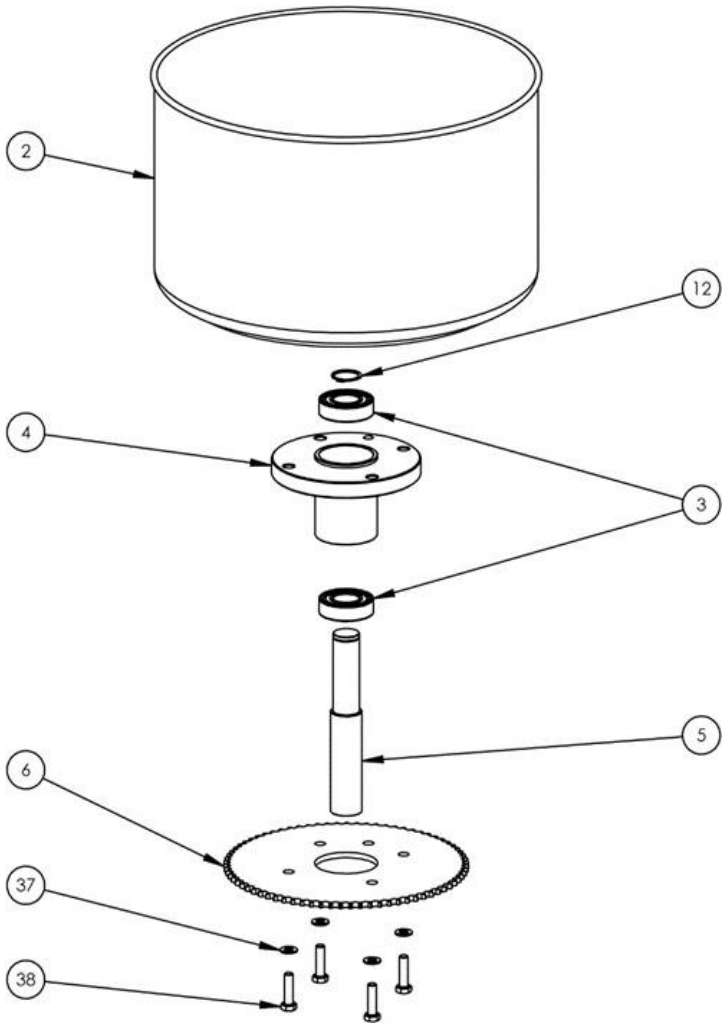

Pos.	Qty.	Code	Item	Description	V	W&T
2	1	0DF232	CIL00022	BOWL L22		
3	2	0KQ394	CIL00093	BEARING 6205 2RS		X
4	1	0DF233	CIL00075	SHARED BOWL SUPPORT		
5	1	0DF234	CIL00067	BOWL SUPPORT SHAFT		
6	1	0DF235	CIL00080	BOWL CROWN		X
12	1	0KQ499	BIL00007	EXTERNAL SEEGER		
37	4	0KQ524	BIL00035	FLAT WASHER 8 ZN		
38	4	0D2329	BIL00034	HEX HEAD SCREW M8 x 30 ZN		

L22 SPIRAL ASSEMBLY

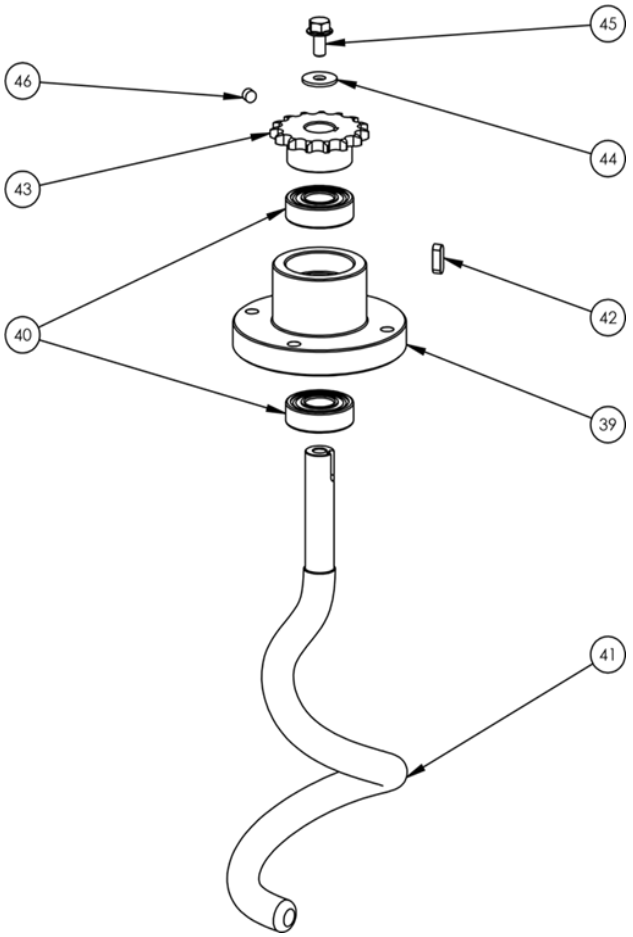

Pos.	Qty.	Code	Item	Description	V	W&T
39	1	0DF259	CIL00072	SPIRAL SUPPORT		
40	2	0D0035	CIL00091	BEARING 6202 2RS		X
41	1	0DF260	CIL00028	SPIRAL L22		
42	1	0KQ486	BIL00005	ROLL PIN 6X30		
43	1	0DF261	CIL00083	SPIRAL PINION		X
44	1	0D0630	BIL00036	FLAT WASHER 8 X 24 ZN		
45	1	0D0498	BIL00030	HEX HEAD SCREW M8 x 16 ZN		
46	1	0D0559	BIL00020	M8 x 8 POINT GRUB SCREW UNPROCESSED		

L22 DRIVE SHAFT ASSEMBLY

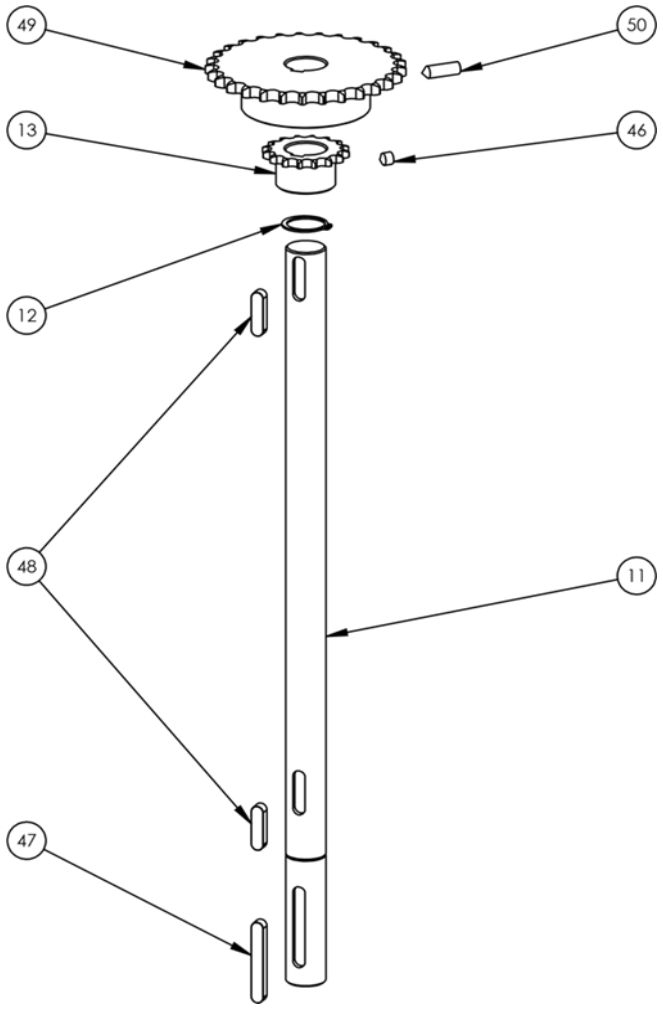

Pos.	Qty.	Code	Item	Description	V	W&T
11	1	0DF240	CIL00062	DRIVE SHAFT		
12	1	0KQ499	BIL00007	EXTERNAL SEEGER		
13	1	0DF242	CIL00088	BOWL DRIVE PINION		X
46	1	0D0559	BIL00020	M8 x 8 POINT GRUB SCREW		
47	1	0D6380	BIL00001	INTERLOCKING TAB 8 x 55		
48	2	0KQ487	BIL00002	INTERLOCKING TAB 8 x 30		
49	1	0DF263	CIL00137	SPIRAL DRIVE PINION		X
50	1	0DF073	BIL00021	M8 x 25 POINT GRUB SCREW		

L22 LID ASSEMBLY

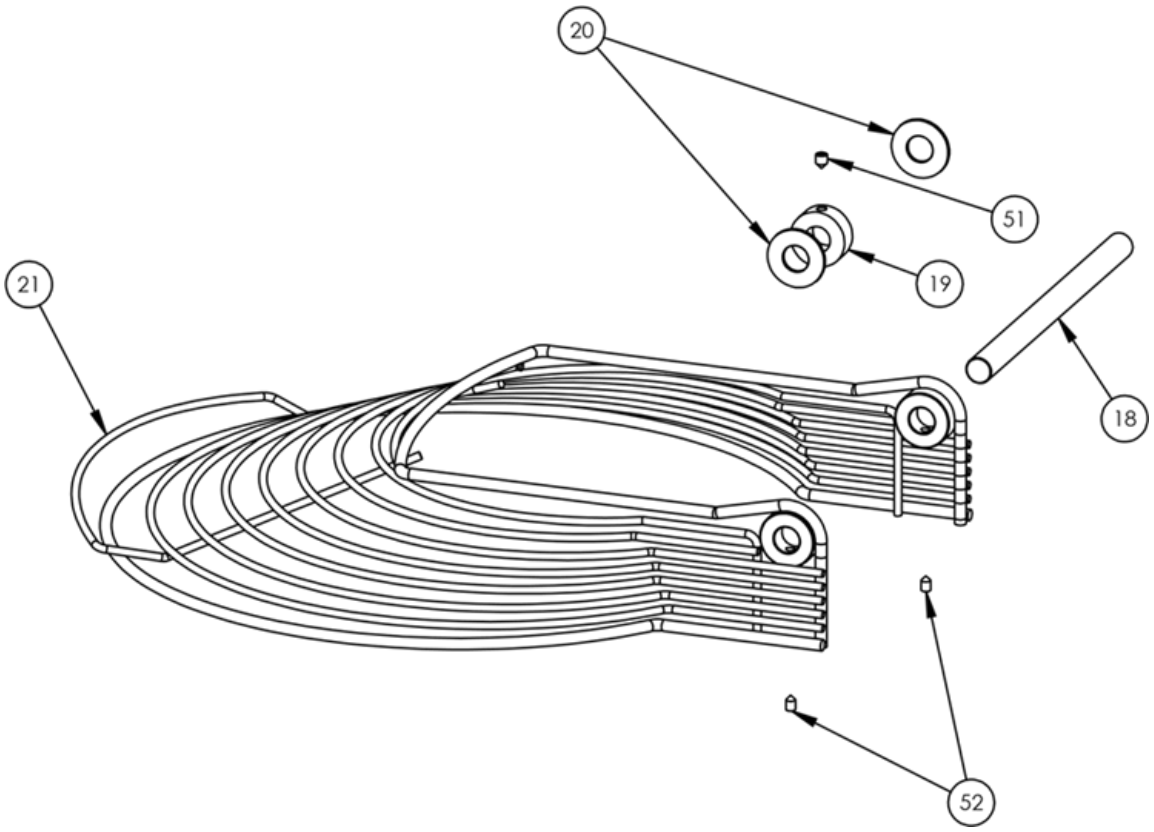

Pos.	Qty.	Code	Item	Description	V	W&T
18	1	0DF245	CIL00069	LID SHAFT		
19	1	0DF206	CIL00038	MICROSWITCH HUB		
20	2	0DF801	CIL00127	NYLON WASHER		
21	1	0DF246	CIL00232	LID L22		
51	1	0D2320	BIL00019	POINT GRUB SCREW M6 x 8 ZN		
52	2	0D2109	BIL00018	POINT GRUB SCREW M5 x 8 ZN		

MICROSWITCH ASSEMBLY

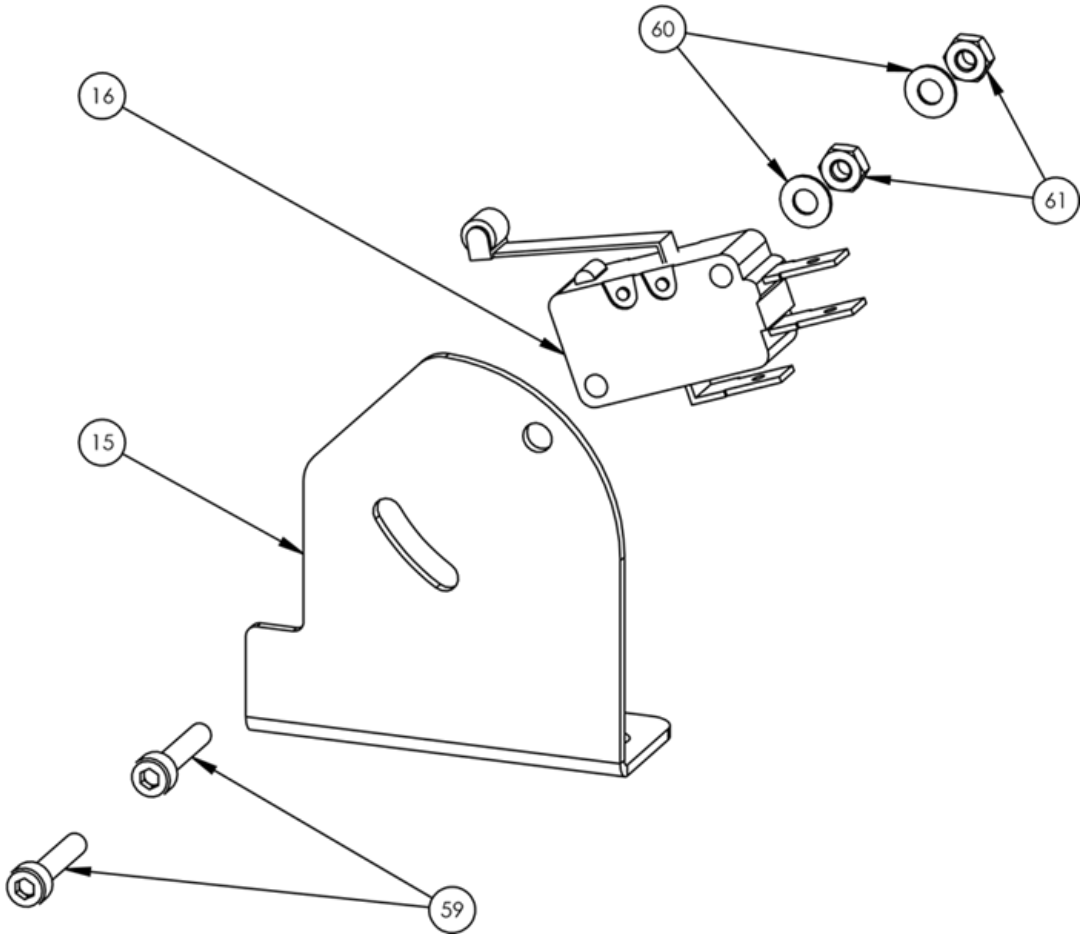

Pos.	Qty.	Code	Item	Description	V	W&T
15	1	0DF244	CIL00115	LID MICROSWITCH BRACKET		
16	1	0DF203	CIL00113	MICROSWITCH D3V	X	
59	2	0KQ511	BIL00015	SOCKET HEAD SCREW		
60	2	0D5620	BIL00043	FLAT WASHER 3 x 7 x 0.5		
61	2	033987	BIL00016	NUT M3 A2		

L33

L33

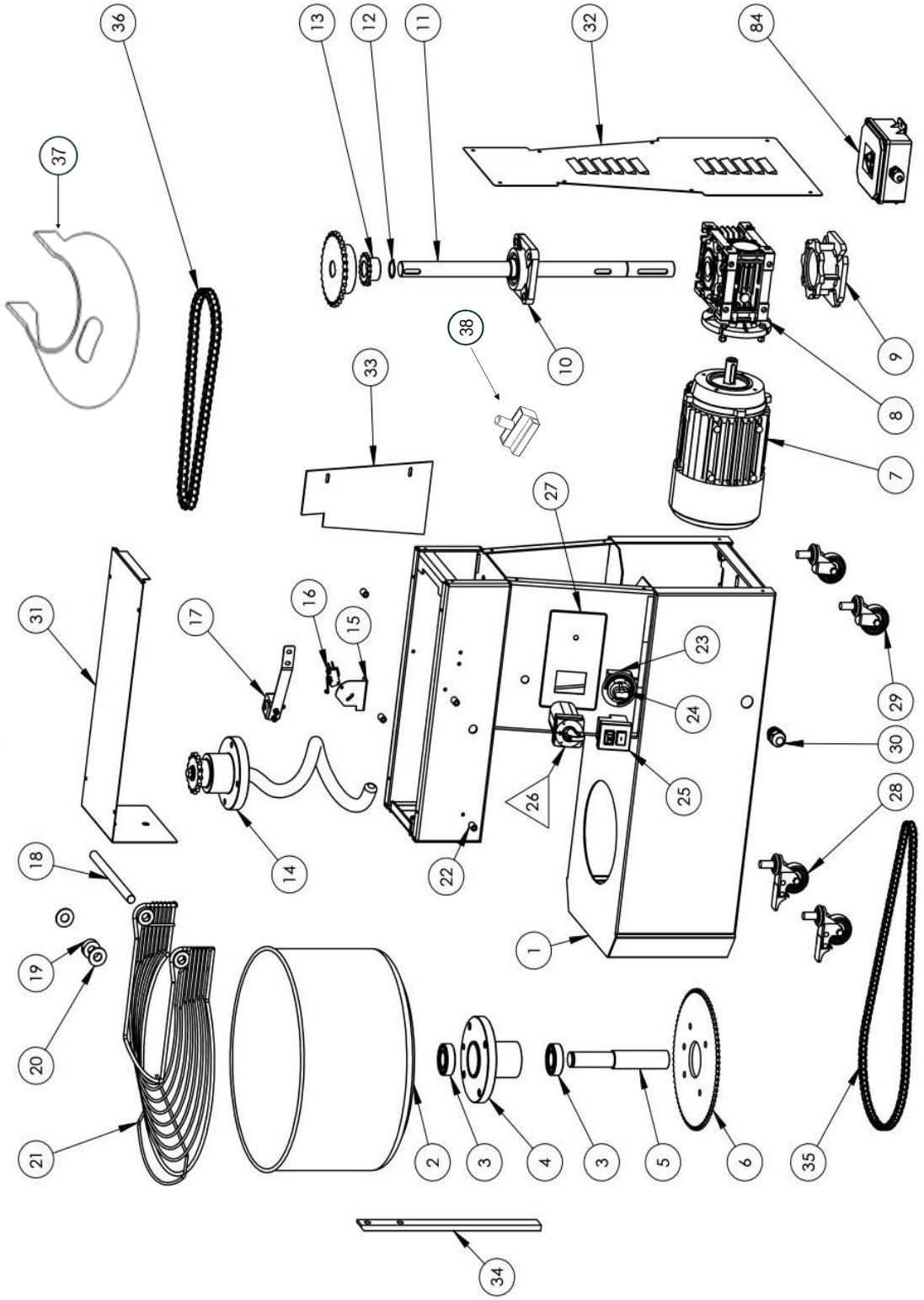
36
13
12
11
32
84
37
38
10
9
33
8
7
27
31
17
16
15
23
29
24
30
26
25
28
14
22
18
1
19
20
21
2
3
4
3
5
6
35
34

L33

Pos.	Qty.	Code	Item	Description	V	W&T
1	1	0DF812	CIL00009	STRUCTURE		
2	1	0DF268	CIL00023	BOWL		
3	2	0KQ394	CIL00093	BEARING 6205 2RS		X
4	1	0DF233	CIL00075	SHARED BOWL SUPPORT		
5	1	0DF234	CIL00067	SHARED BOWL SUPPORT SHAFT		
6	1	0DF235	CIL00080	BOWL CROWN		
7	1	0DF236	CIL00048	MOTOR	X	
8	1	0DF237	CIL00056	GEAR BOX	X	
9	1	0DF238	CIL00059	REDUCER FLANGE		X
10	1	0DF239	CIL00078	DRIVE SHAFT SUPPORT		X
11	1	0DF269	CIL00063	DRIVE SHAFT		
12	1	0KQ499	BIL00007	EXTERNAL SEEGER D25mm		X
13	1	0DF242	CIL00088	BOWL DRIVE PINION		X
14	1	0DF270	CIL00263	SPIRAL ASSEMBLY		
15	1	0DF244	CIL00115	MICROSWITCH BRACKET		
16	1	0DF203	CIL00113	MICROSWITCH D3V-166-1C5	X	
17	1	0DF204	CIL00123	CHAIN TENSIONER ASSEMBLY		
18	1	0DF245	CIL00069	LID SHAFT		
19	1	0DF206	CIL00038	MICROSWITCH HUB		
20	2	0DF801	CIL00127	NYLON LID WASHER		
21	1	0DF271	CIL00233	LID		
22	2	0DF209	CIL00104	PLASTIC STOP SPACER 10 x 15		
23	1	0DF247	CIL00112	TEMPOMATIC TIMER M1 130 M10 SM-T		
24	1	0DF248	MANOP005	NON-GRAD. BLACK KNOB		
25	1	0DF210	CIL00110	BUTTON 0-1		
25	1	0DF249	CIL00111	BUTTON 0-1 400V		
25	1	0DF807	CIL00162	BUTTON 0-1 230V		
26	1	0DF250	CIL000116	SPEED SELECTOR		
27	1	0DF251	CIL00144	SCREEN-PRINTED ADHESIVE LABEL		
28	2	0DF211	CIL00106	WHEEL WITH BRAKE D50 M12		
29	2	0DF212	CIL00107	UNBRAKED WHEEL D50 M12		
30	1	0DF213	CIL00119	PLASTIC CABLE GLAND M20 x 1.5		
31	1	0DF813	CIL00010	UPPER PANEL		
32	1	0DF814	CIL00011	REAR PANEL		
33	1	0DF815	CIL00012	SIDE PANEL		
34	1	0DF275	CIL00042	DOUGH REMOVER PIN		
35	1	0DF276	CIL00101	BOWL CHAIN		X
36	1	0DF317	CIL00095	SPIRAL CHAIN		
37	1	0DF294	CIL00266	LID COVER		X
38	1	0DF375	CIL00274 + CIL00270	FUSE HOLDER + FUSE		
38	1	0DF811	CIL00270	FUSE	X	
84	1	0DF316	CIL00240	THREE PHASE ELECTRICAL SYSTEM BOX	X	

L33 BOWL ASSEMBLY

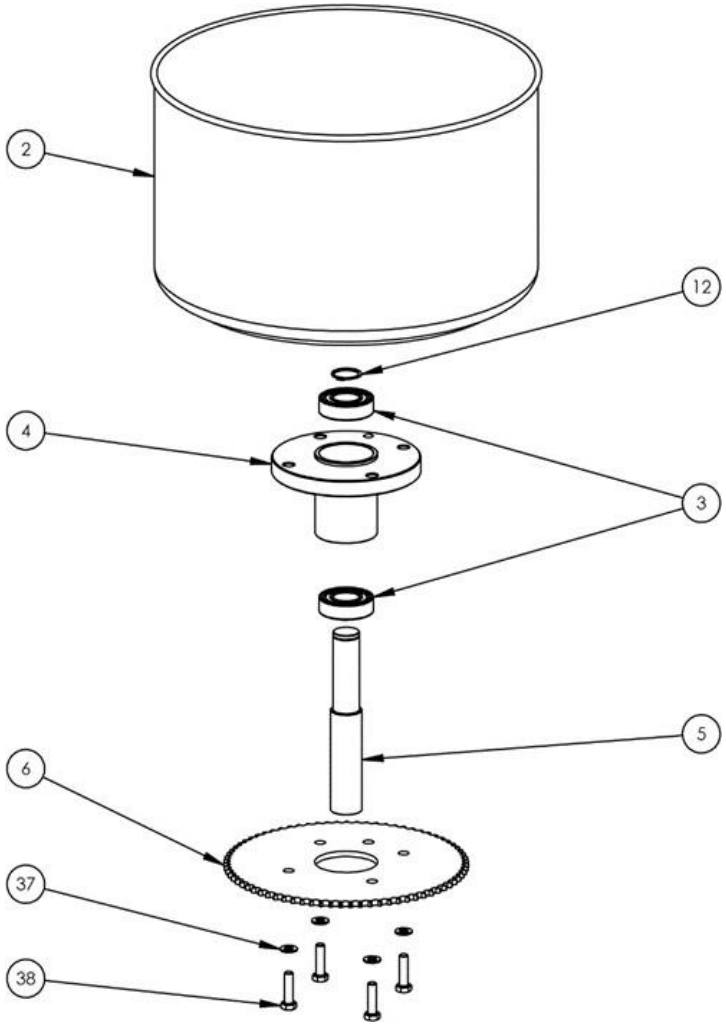

Pos.	Qty.	Code	Item	Description	V	W&T
2	1	0DF268	CIL00023	BOWL L33		
3	2	0KQ394	CIL00093	BEARING 6205 2RS		X
4	1	0DF233	CIL00075	SHARED BOWL SUPPORT		
5	1	0DF234	CIL00067	BOWL SUPPORT SHAFT		
6	1	0DF235	CIL00080	BOWL CROWN		X
12	1	0KQ499	BIL00007	EXTERNAL SEEGER		
37	4	0KQ524	BIL00035	FLAT WASHER 8 ZN		
38	4	0D2329	BIL00034	HEX HEAD SCREW M8 x 30 ZN		

L33 SPIRAL ASSEMBLY

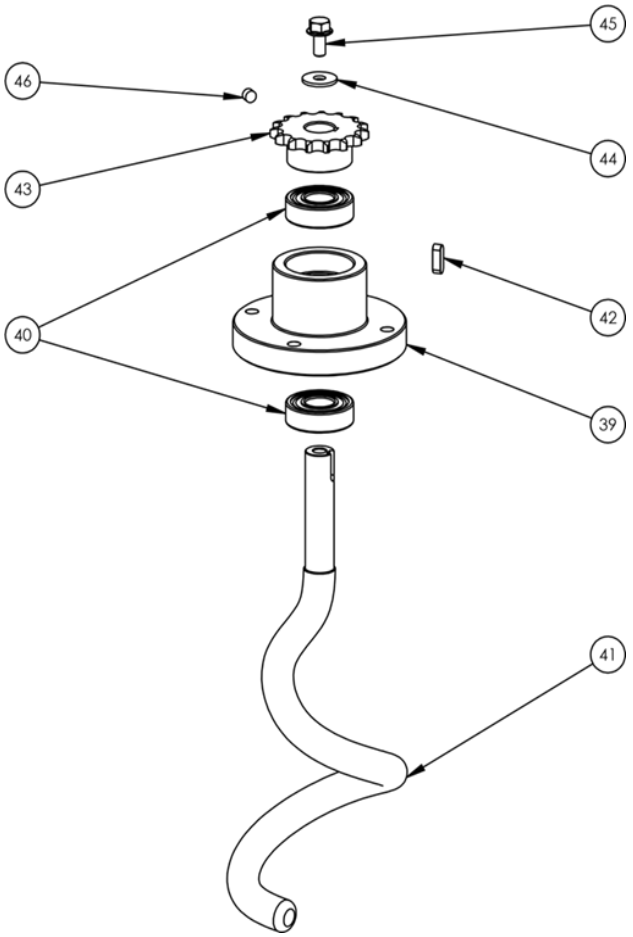

Pos.	Qty.	Code	Item	Description	V	W&T
39	1	0DF259	CIL00072	SPIRAL SUPPORT		
40	2	0D0035	CIL00091	BEARING 6202 2RS		X
41	1	0DF277	CIL00029	SPIRAL L33		
42	1	0KQ486	BIL00005	ROLL PIN 6X30		
43	1	0DF261	CIL00083	SPIRAL PINION		X
44	1	0D0630	BIL00036	FLAT WASHER 8 X 24 ZN		
45	1	0D0498	BIL00030	HEX HEAD SCREW M8 x 16 ZN		
46	1	0D0559	BIL00020	M8 x 8 POINT GRUB SCREW UNPROCESSED		

L33 DRIVE SHAFT ASSEMBLY

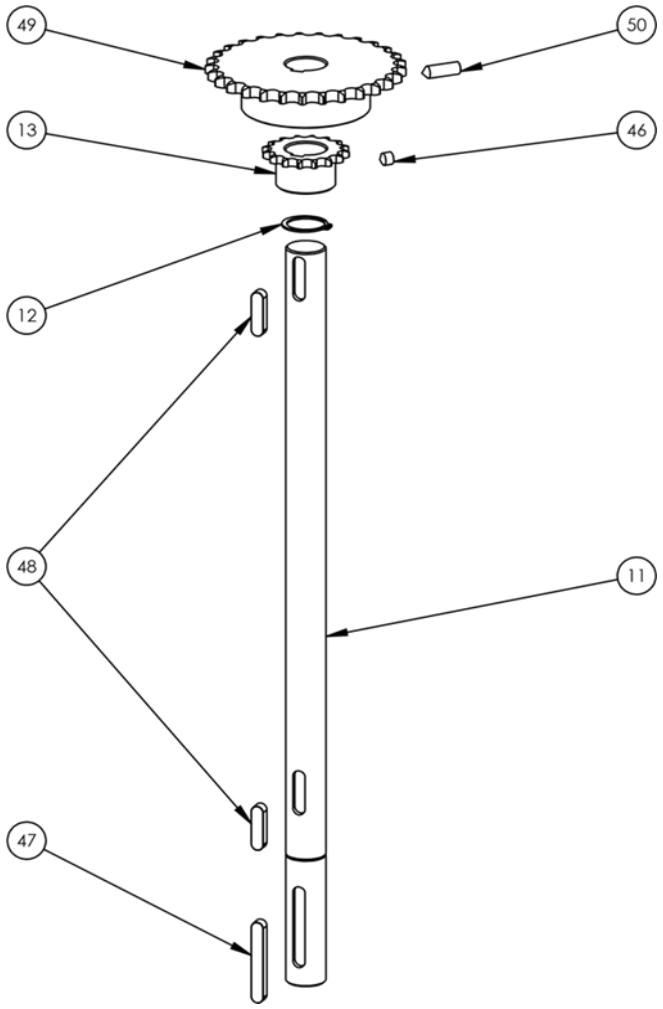

Pos.	Qty.	Code	Item	Description	V	W&T
11	1	0DF269	CIL00063	DRIVE SHAFT		
12	1	0KQ499	BIL00007	EXTERNAL SEEGER		
13	1	0DF242	CIL00088	BOWL DRIVE PINION		X
46	1	0D0559	BIL00020	M8 x 8 POINT GRUB SCREW		
47	1	0D6380	BIL00001	INTERLOCKING TAB 8 x 55		
48	2	0KQ487	BIL00002	INTERLOCKING TAB 8 x 30		
49	1	0DF263	CIL00137	SPIRAL DRIVE PINION		X
50	1	0DF073	BIL00021	M8 x 25 POINT GRUB SCREW		

L33 LID ASSEMBLY

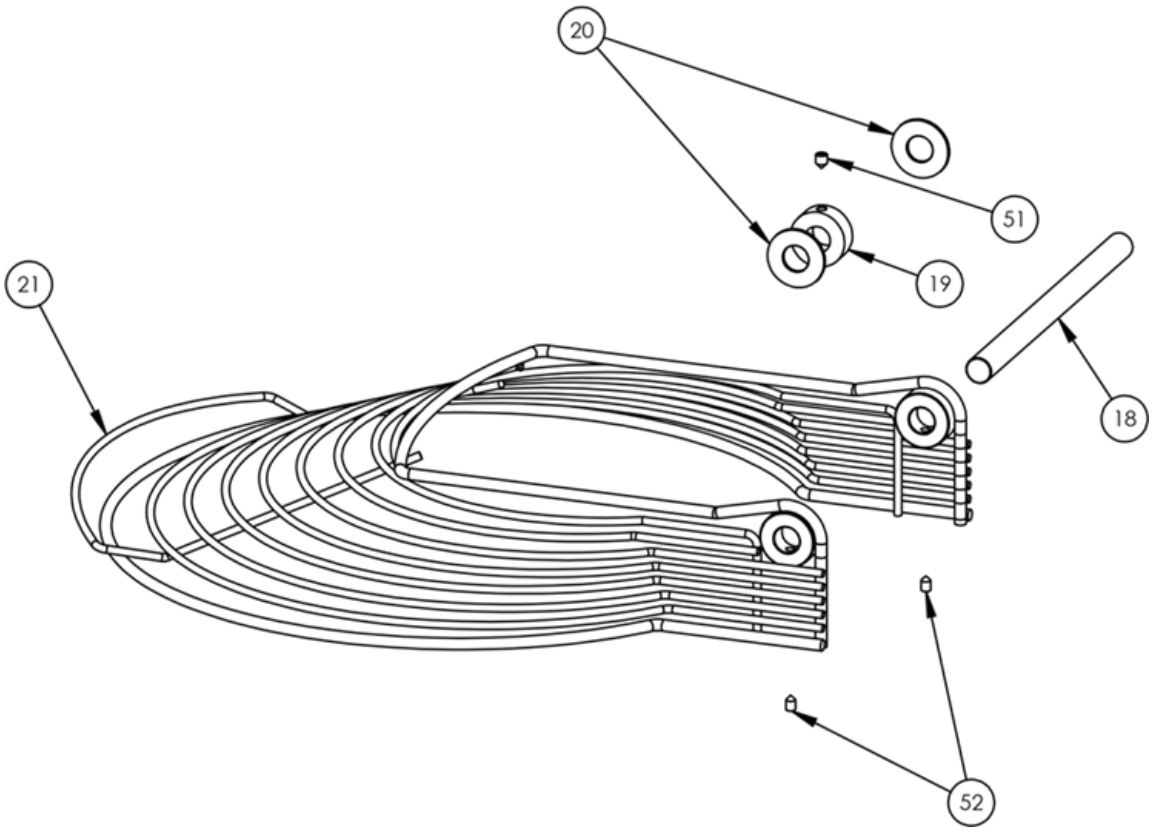

Pos.	Qty.	Code	Item	Description	V	W&T
18	1	0DF245	CIL00069	LID SHAFT		
19	1	0DF206	CIL00038	MICROSWITCH HUB		
20	2	0DF801	CIL00127	NYLON WASHER		
21	1	0DF271	CIL00233	LID L33		
51	1	0D2320	BIL00019	POINT GRUB SCREW M6 x 8 ZN		
52	2	0D2109	BIL00018	POINT GRUB SCREW M5 x 8 ZN		

MICROSWITCH ASSEMBLY

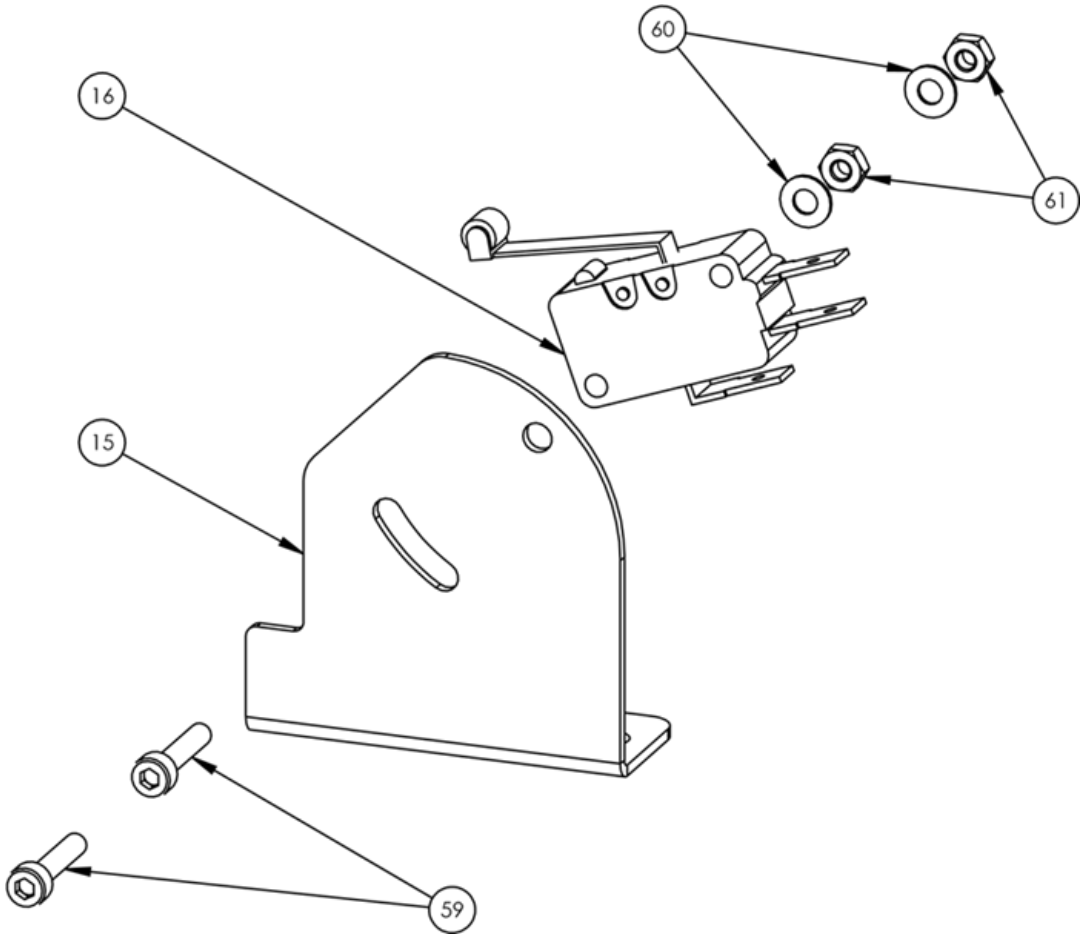

Pos.	Qty.	Code	Item	Description	V	W&T
15	1	0DF244	CIL00115	LID MICROSWITCH BRACKET		
16	1	0DF203	CIL00113	MICROSWITCH D3V	X	
59	2	0KQ511	BIL00015	SOCKET HEAD SCREW		
60	2	0D5620	BIL00043	FLAT WASHER 3 x 7 x 0.5		
61	2	033987	BIL00016	NUT M3 A2		

L42

L42

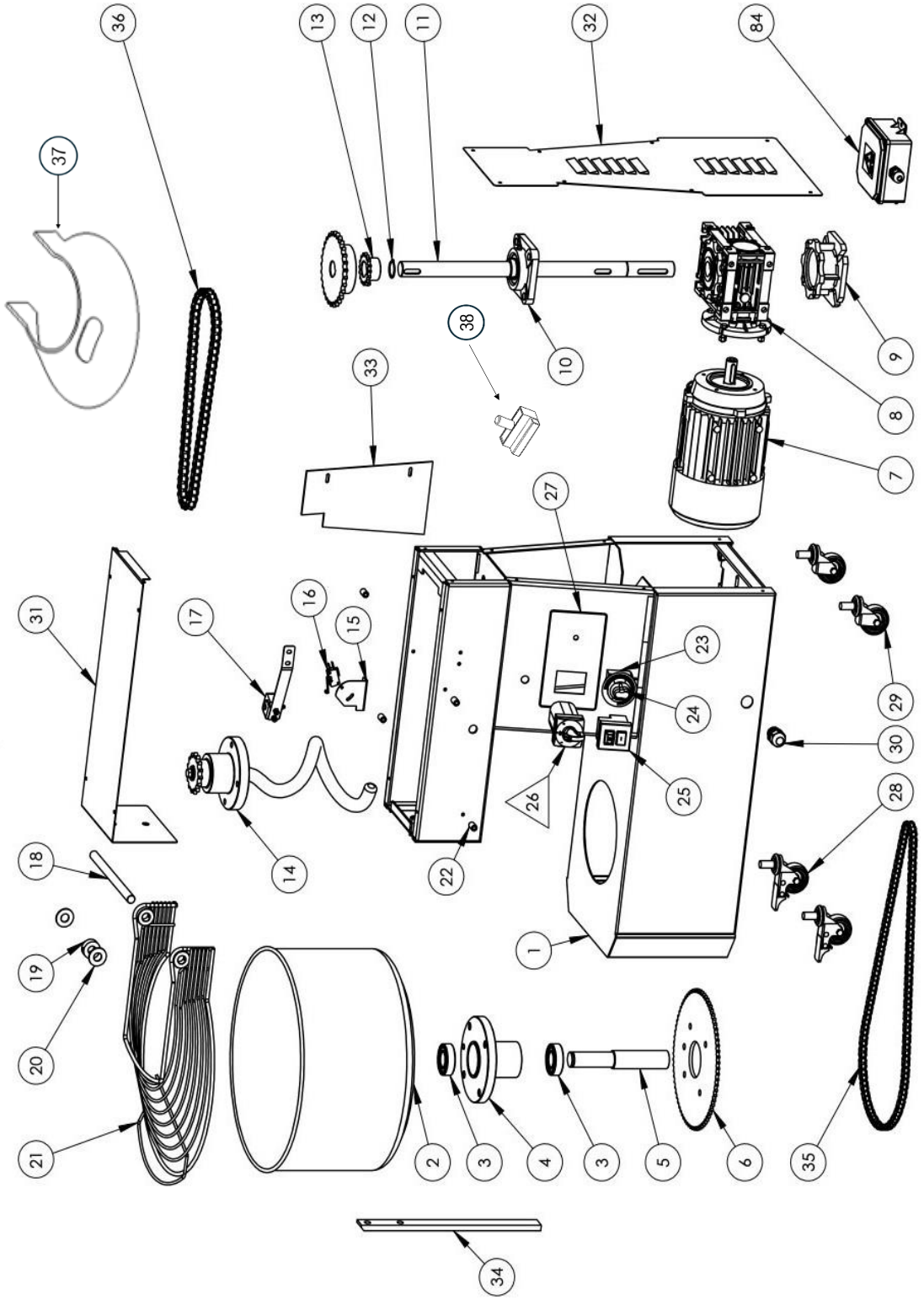
36
13
12
11
32
84
37
38
10
9
33
8
7
27
31
17
16
15
23
29
24
30
26
25
28
14
22
18
1
19
20
21
2
3
4
3
5
6
35
34

L42

Pos.	Qty.	Code	Item	Description	V	W&T
1	1	0DF816	CIL00013	STRUCTURE		
2	1	0DF279	CIL00024	BOWL		
3	2	0KQ394	CIL00093	BEARING 6205 2RS		X
4	1	0DF233	CIL00075	SHARED BOWL SUPPORT		
5	1	0DF234	CIL00067	SHARED BOWL SUPPORT SHAFT		
6	1	0DF280	CIL00081	BOWL CROWN		
7	1	0DF281	CIL00054	MOTOR	X	
8	1	0DF282	CIL00057	GEAR BOX	X	
9	1	0DF283	CIL00060	REDUCER FLANGE		X
10	1	0DF239	CIL00078	DRIVE SHAFT SUPPORT		X
11	1	0DF284	CIL00064	DRIVE SHAFT		
12	1	0KQ499	BIL00007	EXTERNAL SEEGER D25mm		X
13	1	0DF285	CIL00138	BOWL DRIVE PINION		X
14	1	0DF286	CIL00142	SPIRAL ASSEMBLY		
15	1	0DF244	CIL00115	MICROSWITCH BRACKET		
16	1	0DF203	CIL00113	MICROSWITCH D3V-166-1C5	X	
17	1	0DF204	CIL00123	CHAIN TENSIONER ASSEMBLY		
18	1	0DF287	CIL00070	LID SHAFT		
19	1	0DF206	CIL00038	MICROSWITCH HUB		
20	2	0DF801	CIL00127	NYLON LID WASHER		
21	1	0DF288	CIL00234	LID		
22	2	0DF209	CIL00104	PLASTIC STOP SPACER 10 x 15		
23	1	0DF247	CIL00112	TEMPOMATIC TIMER M1 130 M10 SM-T		
24	1	0DF248	MANOP005	NON-GRAD. BLACK KNOB		
25	1	0DF210	CIL00110	BUTTON 0-1		
25	1	0DF249	CIL00111	BUTTON 0-1 400V		
25	1	0DF807	CIL00162	BUTTON 0-1 230V		
26	1	0DF250	CIL000116	SPEED SELECTOR		
27	1	0DF251	CIL00144	SCREEN-PRINTED ADHESIVE LABEL		
28	2	0DF211	CIL00106	WHEEL WITH BRAKE D50 M12		
29	2	0DF212	CIL00107	UNBRAKED WHEEL D50 M12		
30	1	0DF213	CIL00119	PLASTIC CABLE GLAND M20 x 1.5		
31	1	0DF817	CIL00014	UPPER PANEL		
32	1	0DF818	CIL00015	REAR PANEL		
33	1	0DF819	CIL00016	SIDE PANEL		
34	1	0DF292	CIL00043	DOUGH REMOVER PIN		
35	1	0DF293	CIL00102	BOWL CHAIN		X
36	1	0DF318	CIL00096	SPIRAL CHAIN		
37	1	0DF295	CIL00267	LID COVER		X
38	1	0DF376	CIL00274 + CIL00272	FUSE HOLDER + FUSE		
38	1	0DF820	CIL00272	FUSE	X	
84	1	0DF316	CIL00240	THREE PHASE ELECTRICAL SYSTEM BOX	X	

L42 BOWL ASSEMBLY

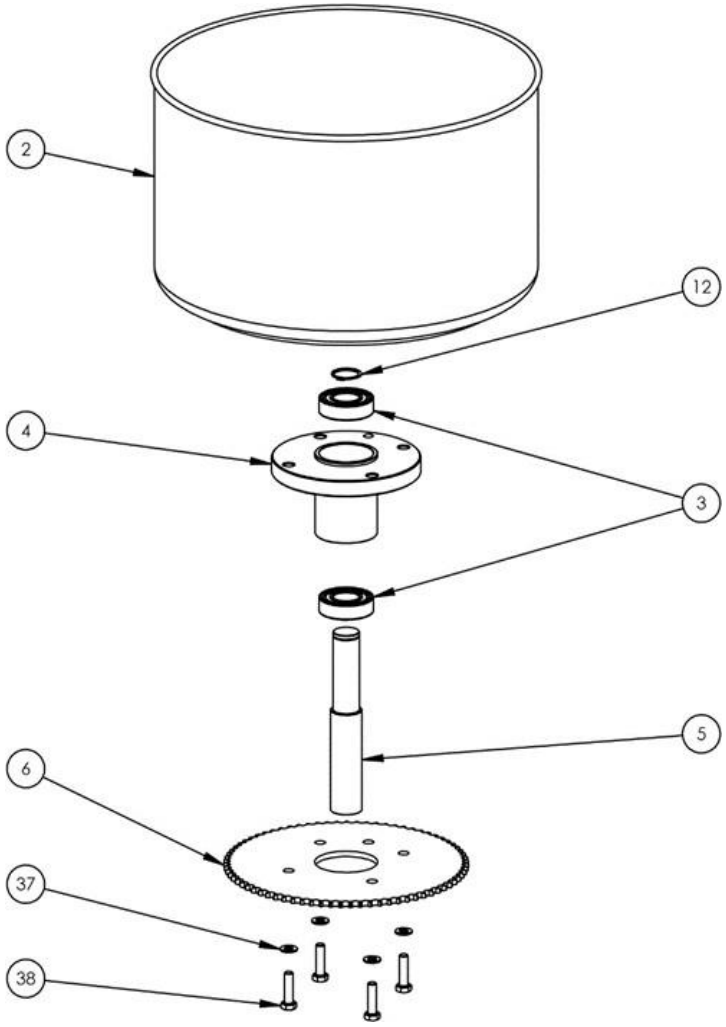

Pos.	Qty.	Code	Item	Description	V	W&T
2	1	0DF279	CIL00024	BOWL L42		
3	2	0KQ394	CIL00093	BEARING 6205 2RS		X
4	1	0DF233	CIL00075	SHARED BOWL SUPPORT		
5	1	0DF234	CIL00067	BOWL SUPPORT SHAFT		
6	1	0DF280	CIL00081	BOWL CROWN		X
12	1	0KQ499	BIL00007	EXTERNAL SEEGER		
37	4	0KQ524	BIL00035	FLAT WASHER 8 ZN		
38	4	0D2329	BIL00034	HEX HEAD SCREW M8 x 30 ZN		

L42 SPIRAL ASSEMBLY

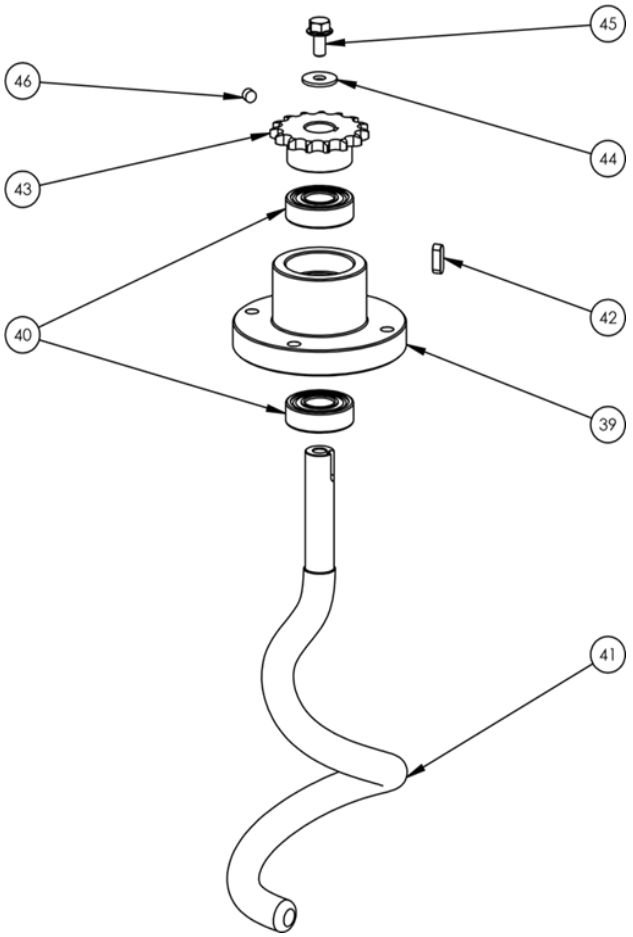

Pos.	Qty.	Code	Item	Description	V	W&T
39	1	0DF296	CIL00073	SPIRAL SUPPORT		
40	2	0KQ395	CIL00092	BEARING 6204 2RS		X
41	1	0DF297	CIL00030	SPIRAL L42		
42	1	0KQ486	BIL00005	ROLL PIN 6X30		
43	1	0DF298	CIL00084	SPIRAL PINION		X
44	1	0D0630	BIL00036	FLAT WASHER 8 X 24 ZN		
45	1	0D0498	BIL00030	HEX HEAD SCREW M8 x 16 ZN		
46	1	0D0559	BIL00020	M8 x 8 POINT GRUB SCREW UNPROCESSED		

L42 DRIVE SHAFT ASSEMBLY

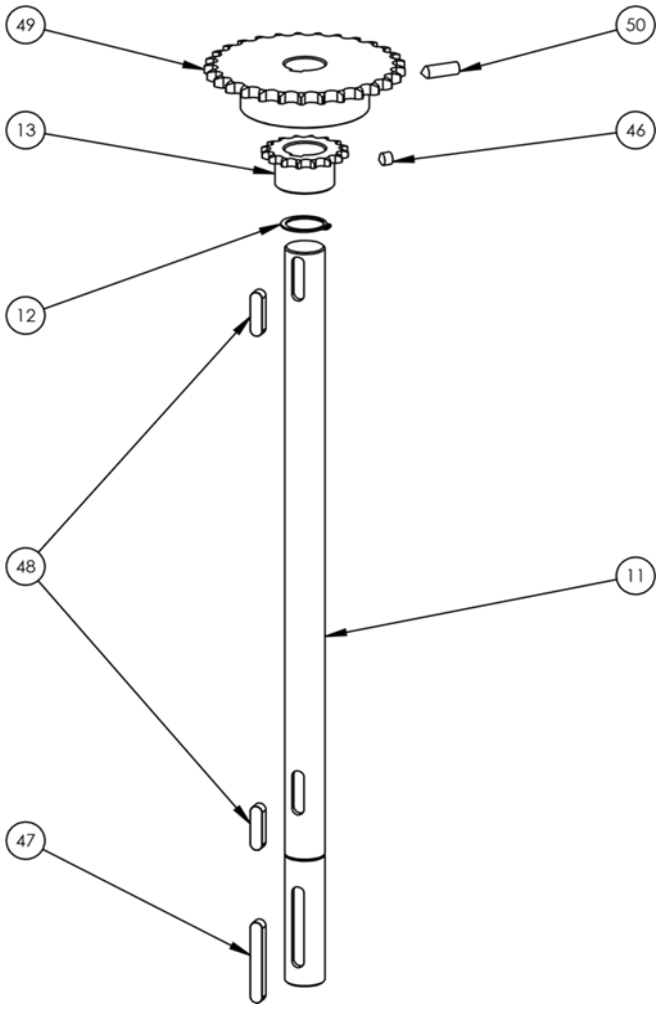

Pos.	Qty.	Code	Item	Description	V	W&T
11	1	0DF284	CIL00064	DRIVE SHAFT		
12	1	0KQ499	BIL00007	EXTERNAL SEEGER		
13	1	0DF285	CIL00138	BOWL DRIVE PINION		X
46	1	0D0559	BIL00020	M8 x 8 POINT GRUB SCREW		
47	1	0D6380	BIL00001	INTERLOCKING TAB 8 x 55		
48	2	0KQ487	BIL00002	INTERLOCKING TAB 8 x 30		
49	1	0DF263	CIL00137	SPIRAL DRIVE PINION		X
50	1	0DF073	BIL00021	M8 x 25 POINT GRUB SCREW		

L42 LID ASSEMBLY

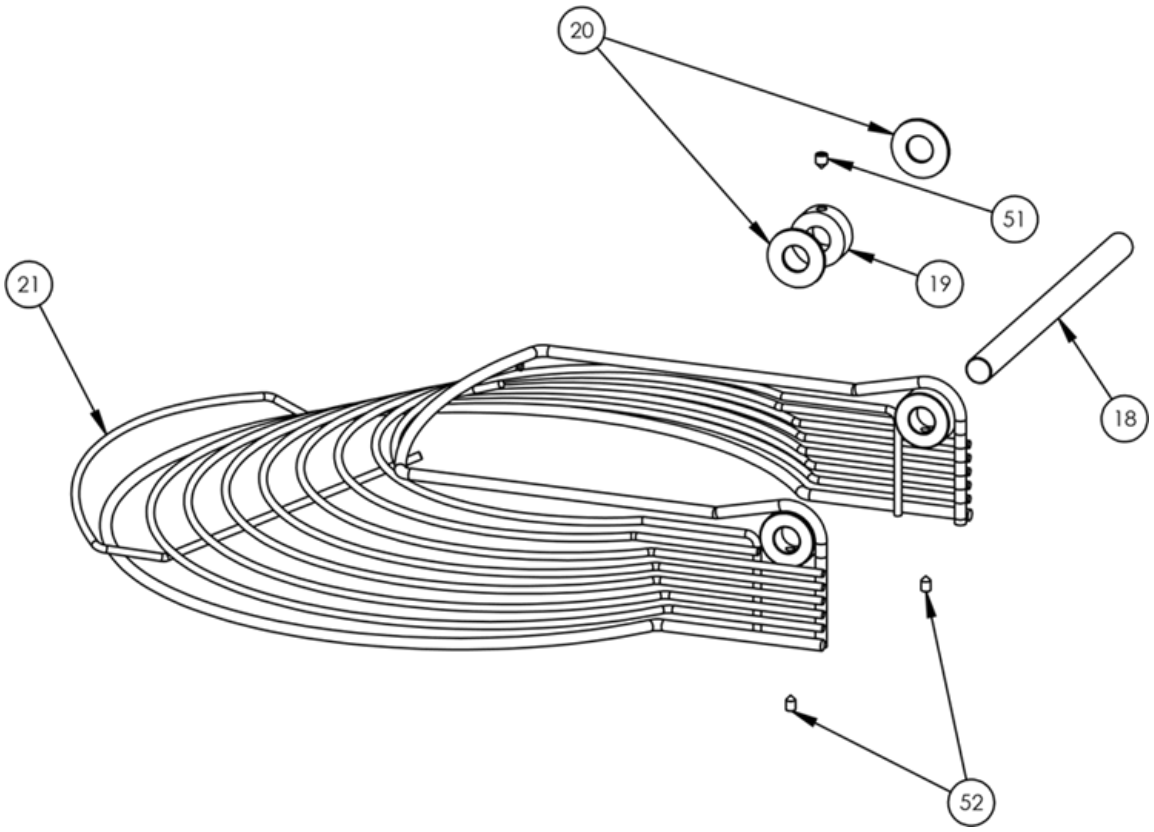

Pos.	Qty.	Code	Item	Description	V	W&T
18	1	0DF287	CIL00070	LID SHAFT		
19	1	0DF206	CIL00038	MICROSWITCH HUB		
20	2	0DF801	CIL00127	NYLON WASHER		
21	1	0DF288	CIL00234	LID L42		
51	1	0D2320	BIL00019	POINT GRUB SCREW M6 x 8 ZN		
52	2	0D2109	BIL00018	POINT GRUB SCREW M5 x 8 ZN		

MICROSWITCH ASSEMBLY

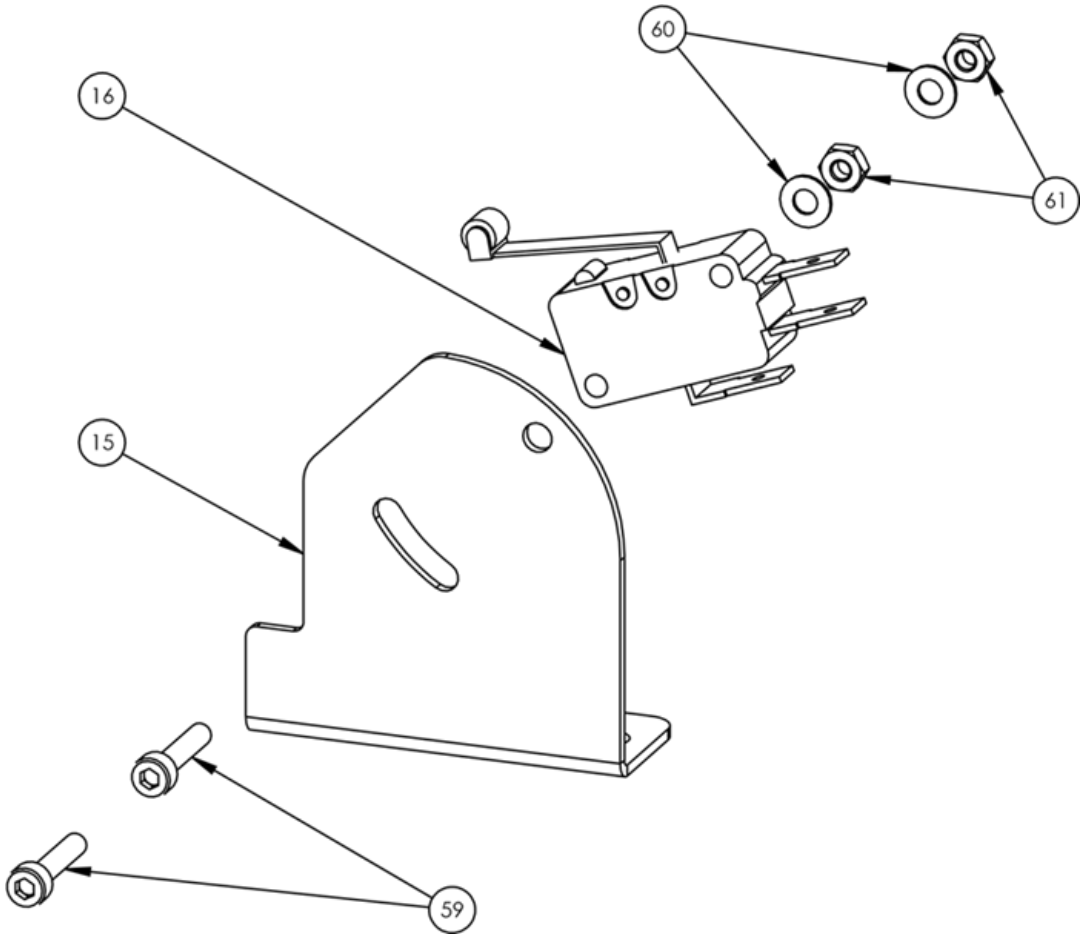

Pos.	Qty.	Code	Item	Description	V	W&T
15	1	0DF244	CIL00115	LID MICROSWITCH BRACKET		
16	1	0DF203	CIL00113	MICROSWITCH D3V	X	
59	2	0KQ511	BIL00015	SOCKET HEAD SCREW		
60	2	0D5620	BIL00043	FLAT WASHER 3 x 7 x 0.5		
61	2	033987	BIL00016	NUT M3 A2		

BOWL GUIDE ASSEMBLY

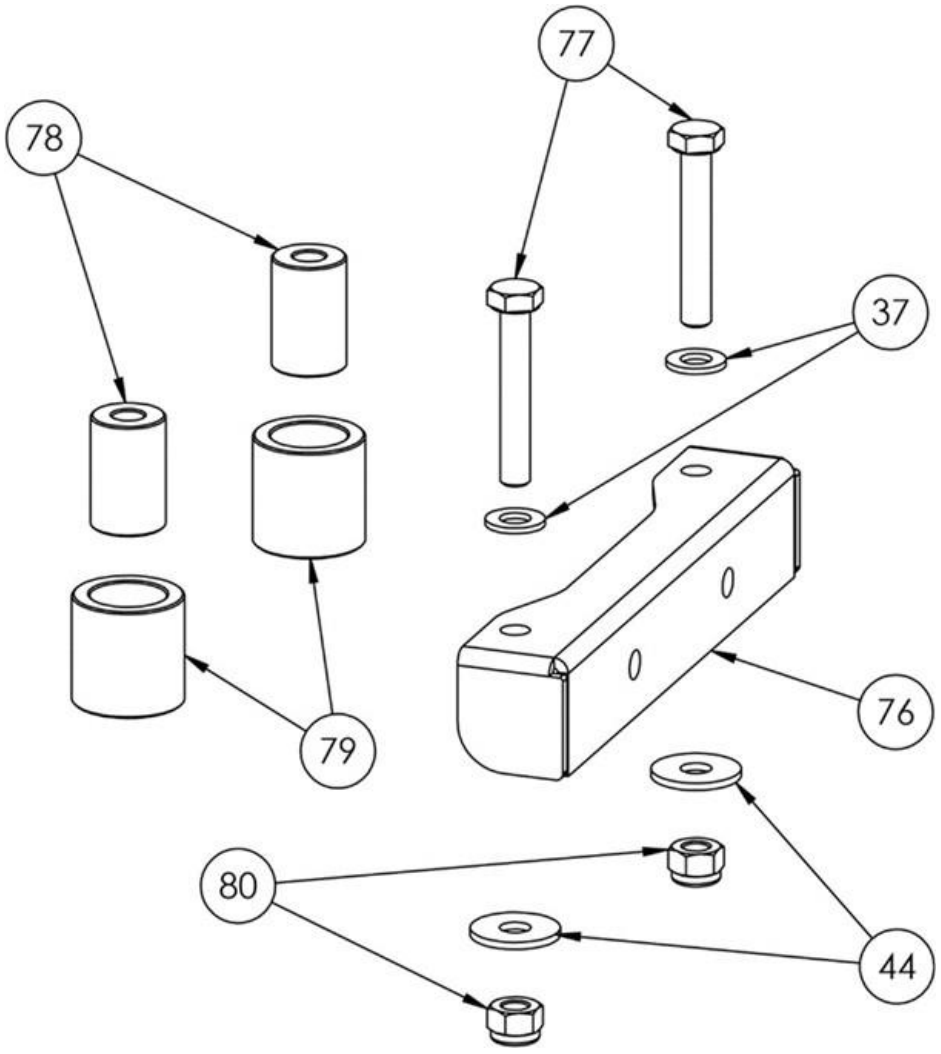

Pos.	Qty.	Code	Item	Description	V	W&T
37	2	0KQ524	BIL00035	FLAT WASHER 8 ZN		
44	2	0D0630	BIL00036	FLAT WASHER 8 x 24 ZN		
76	1	0DF264	CIL00131	BOWL ROLLS SUPPORT		
77	2	0D3488	BIL00051	TE SCREW M8 x 50 ZN		
78	2	0DF265	CIL00133	GV ROLLER BUSH D20 x 31		
79	2	0DF266	CIL00132	BOWL GUIDE ROLLERD		
80	2	0D0641	BIL00050	SELF BLOCKING NUT M8 ZN		

L53

L53

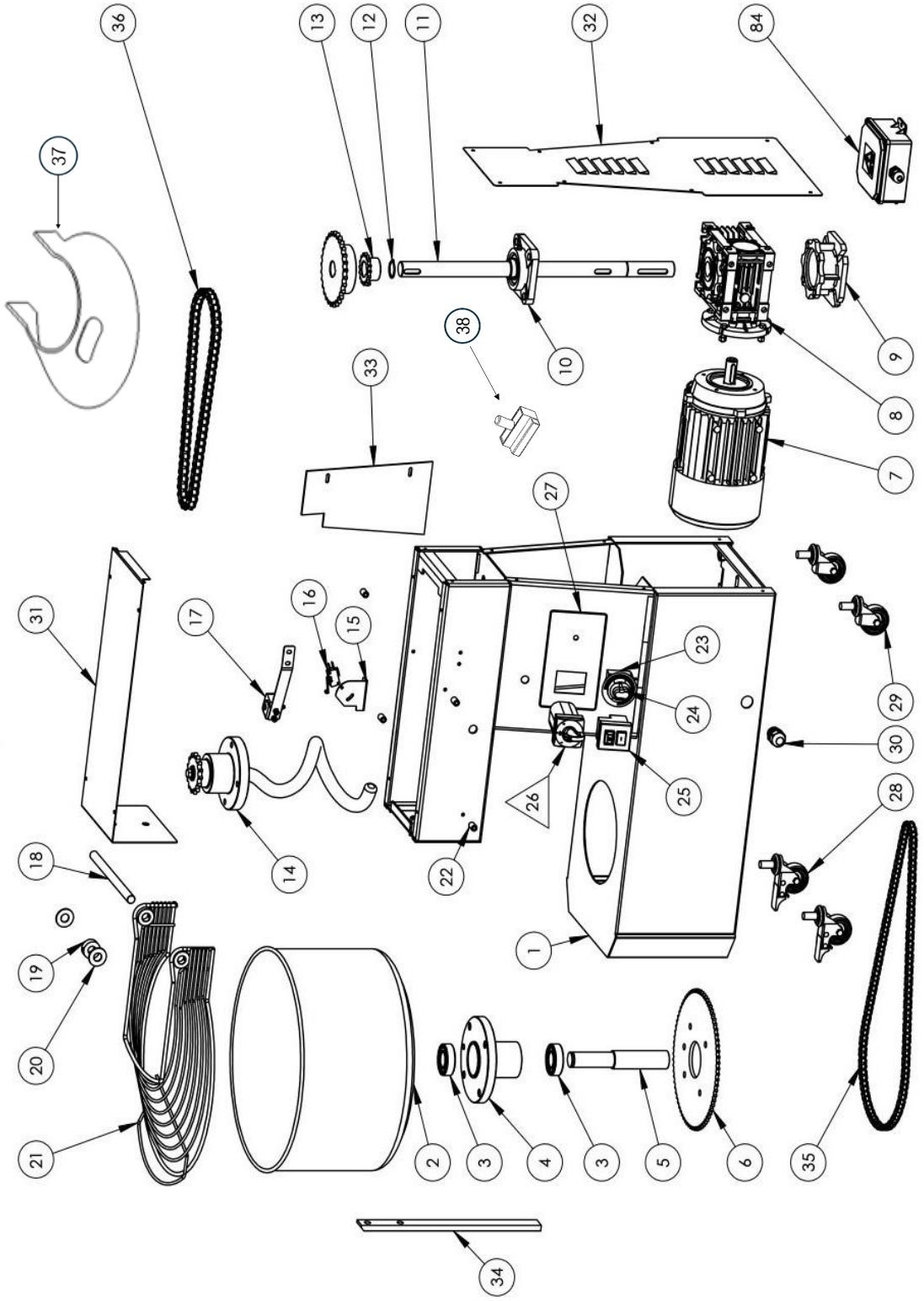
36
13
12
11
32
84
37
38
10
9
33
8
7
27
31
17
16
15
23
29
24
30
26
25
28
14
22
18
1
19
20
21
2
3
4
3
5
6
35
34

L53

Pos.	Qty.	Code	Item	Description	V	W&T
1	1	0DF821	CIL00017	STRUCTURE		
2	1	0DF300	CIL00025	BOWL		
3	2	0KQ394	CIL00093	BEARING 6205 2RS		X
4	1	0DF233	CIL00075	SHARED BOWL SUPPORT		
5	1	0DF234	CIL00067	SHARED BOWL SUPPORT SHAFT		
6	1	0DF280	CIL00081	BOWL CROWN		
7	1	0DF281	CIL00054	MOTOR	X	
8	1	0DF282	CIL00057	GEAR BOX	X	
9	1	0DF283	CIL00060	REDUCER FLANGE		X
10	1	0DF239	CIL00078	DRIVE SHAFT SUPPORT		X
11	1	0DF301	CIL00065	DRIVE SHAFT		
12	1	0KQ499	BIL00007	EXTERNAL SEEGER D25mm		X
13	1	0DF285	CIL00138	BOWL DRIVE PINION		X
14	1	0DF302	CIL00143	SPIRAL ASSEMBLY		
15	1	0DF244	CIL00115	MICROSWITCH BRACKET		
16	1	0DF203	CIL00113	MICROSWITCH D3V-166-1C5	X	
17	1	0DF204	CIL00123	CHAIN TENSIONER ASSEMBLY		
18	1	0DF287	CIL00070	LID SHAFT		
19	1	0DF206	CIL00038	MICROSWITCH HUB		
20	2	0DF801	CIL00127	NYLON LID WASHER		
21	1	0DF303	CIL00235	LID		
22	2	0DF209	CIL00104	PLASTIC STOP SPACER 10 x 15		
23	1	0DF247	CIL00112	TEMPOMATIC TIMER M1 130 M10 SM-T		
24	1	0DF248	MANOP005	NON-GRAD. BLACK KNOB		
25	1	0DF210	CIL00110	BUTTON 0-1		
25	1	0DF249	CIL00111	BUTTON 0-1 400V		
25	1	0DF807	CIL00162	BUTTON 0-1 230V		
26	1	0DF250	CIL000116	SPEED SELECTOR		
27	1	0DF251	CIL00144	SCREEN-PRINTED ADHESIVE LABEL		
28	2	0DF211	CIL00106	WHEEL WITH BRAKE D50 M12		
29	2	0DF212	CIL00107	UNBRAKED WHEEL D50 M12		
30	1	0DF213	CIL00119	PLASTIC CABLE GLAND M20 x 1.5		
31	1	0DF822	CIL00018	UPPER PANEL		
32	1	0DF823	CIL00019	REAR PANEL		
33	1	0DF824	CIL00020	SIDE PANEL		
34	1	0DF307	CIL00044	DOUGH REMOVER PIN		
35	1	0DF319	CIL00139	BOWL CHAIN		X
36	1	0DF308	CIL00103	SPIRAL CHAIN		
37	1	0DF309	CIL00268	LID COVER		X
38	1	0DF376	CIL00274 + CIL00272	FUSE HOLDER + FUSE		
38	1	0DF820	CIL00272	FUSE	X	
84	1	0DF316	CIL00240	THREE PHASE ELECTRICAL SYSTEM BOX	X	

L53 BOWL ASSEMBLY

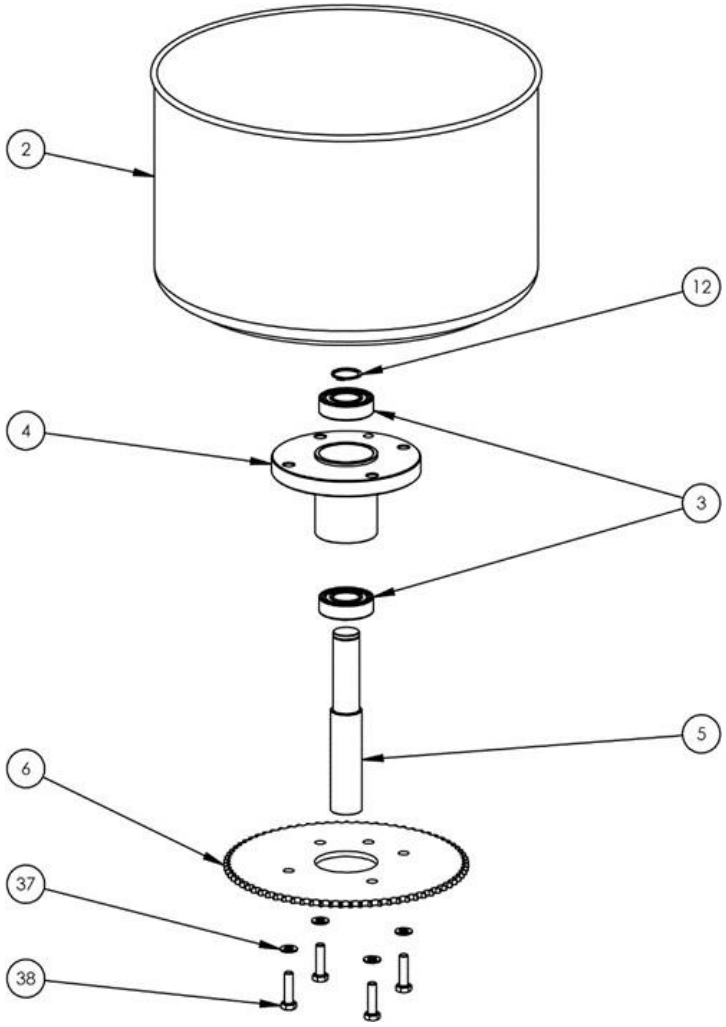

Pos.	Qty.	Code	Item	Description	V	W&T
2	1	0DF300	CIL00025	BOWL L53		
3	2	0KQ394	CIL00093	BEARING 6205 2RS		X
4	1	0DF233	CIL00075	SHARED BOWL SUPPORT		
5	1	0DF234	CIL00067	BOWL SUPPORT SHAFT		
6	1	0DF280	CIL00081	BOWL CROWN		X
12	1	0KQ499	BIL00007	EXTERNAL SEEGER		
37	4	0KQ524	BIL00035	FLAT WASHER 8 ZN		
38	4	0D2329	BIL00034	HEX HEAD SCREW M8 x 30 ZN		

L53 SPIRAL ASSEMBLY

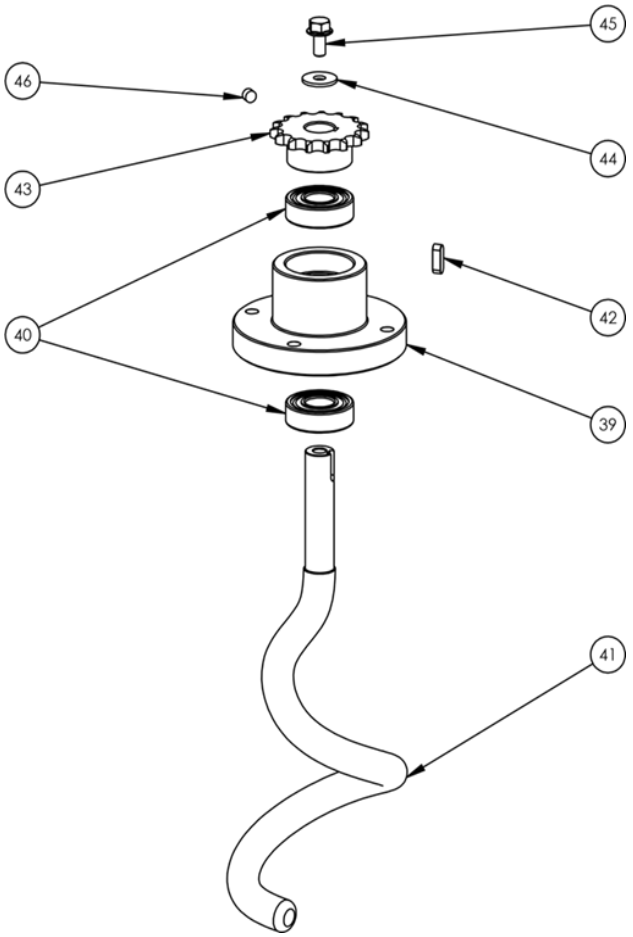

Pos.	Qty.	Code	Item	Description	V	W&T
39	1	0DF296	CIL00073	SPIRAL SUPPORT		
40	2	0KQ395	CIL00092	BEARING 6204 2RS		X
41	1	0DF310	CIL00031	SPIRAL L53		
42	1	0KQ486	BIL00005	ROLL PIN 6X30		
43	1	0DF311	CIL00136	SPIRAL PINION		X
44	1	0D0630	BIL00036	FLAT WASHER 8 X 24 ZN		
45	1	0D0498	BIL00030	HEX HEAD SCREW M8 x 16 ZN		
46	1	0D0559	BIL00020	M8 x 8 POINT GRUB SCREW UNPROCESSED		

L53 DRIVE SHAFT ASSEMBLY

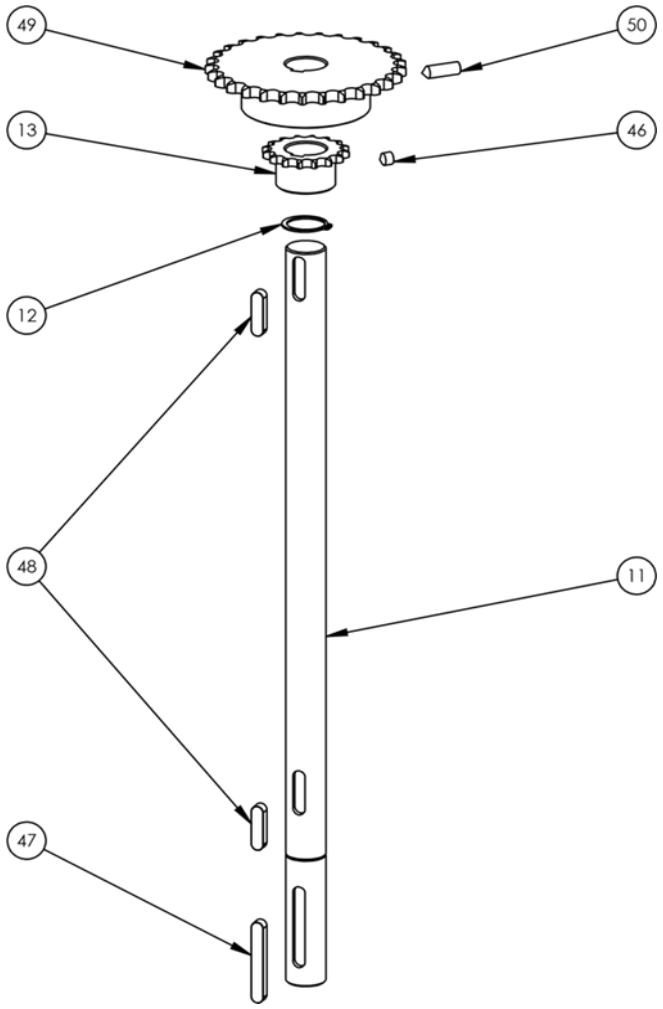

Pos.	Qty.	Code	Item	Description	V	W&T
11	1	0DF301	CIL00065	DRIVE SHAFT		
12	1	0KQ499	BIL00007	EXTERNAL SEEGER		
13	1	0DF315	CIL00089	BOWL DRIVE PINION		X
46	1	0D0559	BIL00020	M8 x 8 POINT GRUB SCREW		
47	1	0D6380	BIL00001	INTERLOCKING TAB 8 x 55		
48	2	0KQ487	BIL00002	INTERLOCKING TAB 8 x 30		
49	1	0DF312	CIL00086	SPIRAL DRIVE PINION		X
50	1	0DF073	BIL00021	M8 x 25 POINT GRUB SCREW		

L53 LID ASSEMBLY

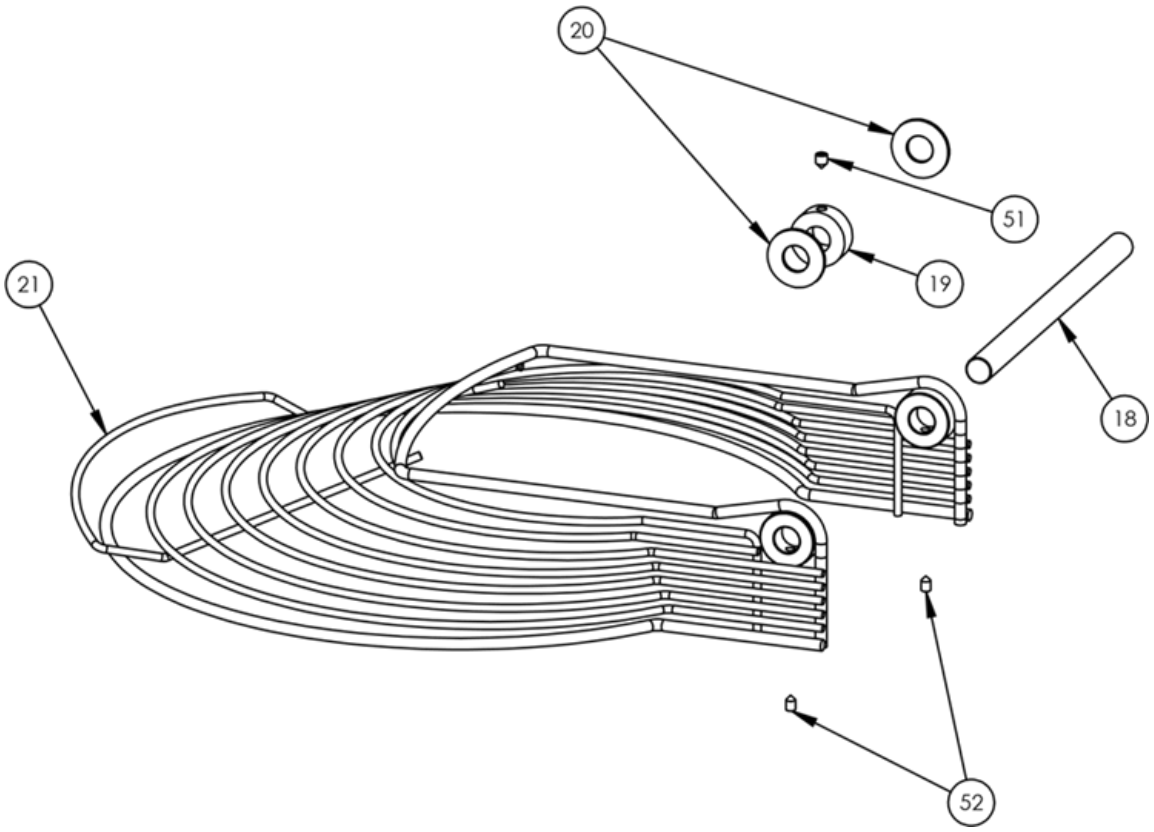

Pos.	Qty.	Code	Item	Description	V	W&T
18	1	0DF287	CIL00070	LID SHAFT		
19	1	0DF206	CIL00038	MICROSWITCH HUB		
20	2	0DF801	CIL00127	NYLON WASHER		
21	1	0DF303	CIL00235	LID L53		
51	1	0D2320	BIL00019	POINT GRUB SCREW M6 x 8 ZN		
52	2	0D2109	BIL00018	POINT GRUB SCREW M5 x 8 ZN		

MICROSWITCH ASSEMBLY

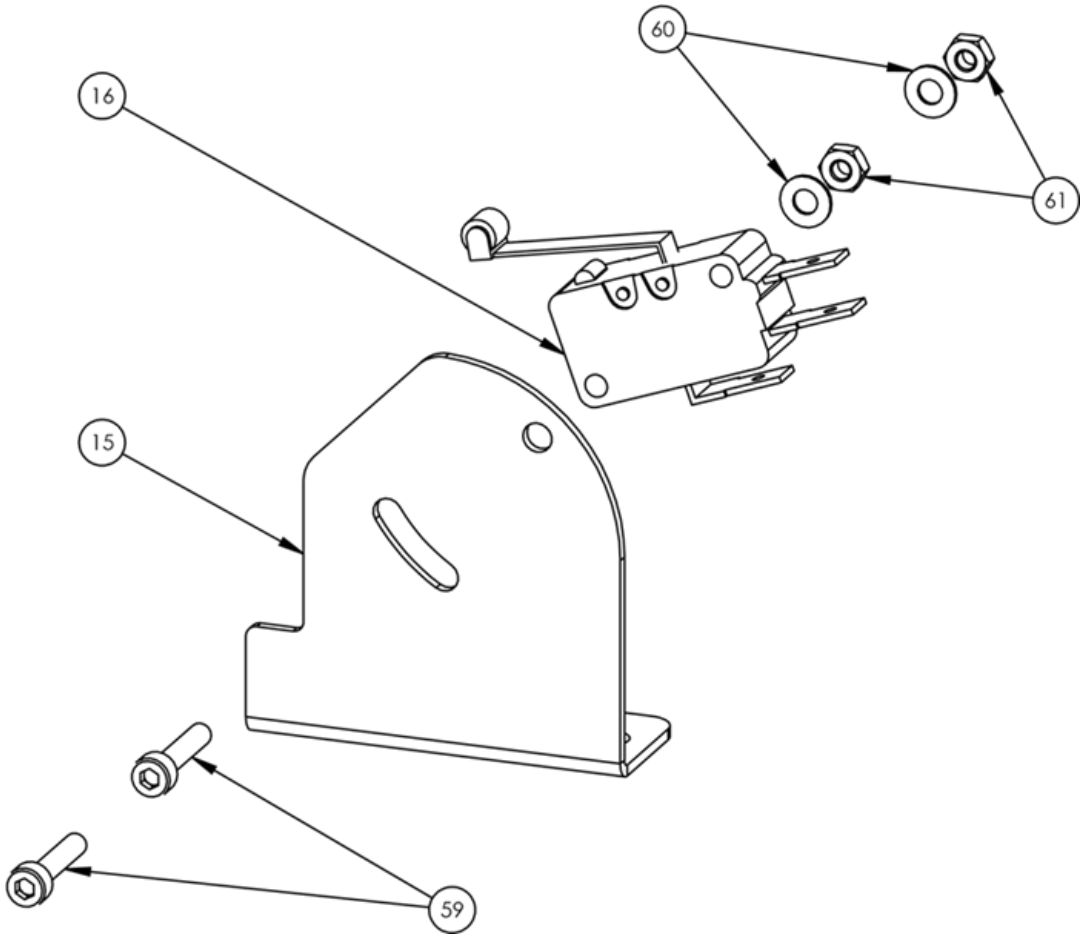

Pos.	Qty.	Code	Item	Description	V	W&T
15	1	0DF244	CIL00115	LID MICROSWITCH BRACKET		
16	1	0DF203	CIL00113	MICROSWITCH D3V	X	
59	2	0KQ511	BIL00015	SOCKET HEAD SCREW		
60	2	0D5620	BIL00043	FLAT WASHER 3 x 7 x 0.5		
61	2	033987	BIL00016	NUT M3 A2		

BOWL GUIDE ASSEMBLY

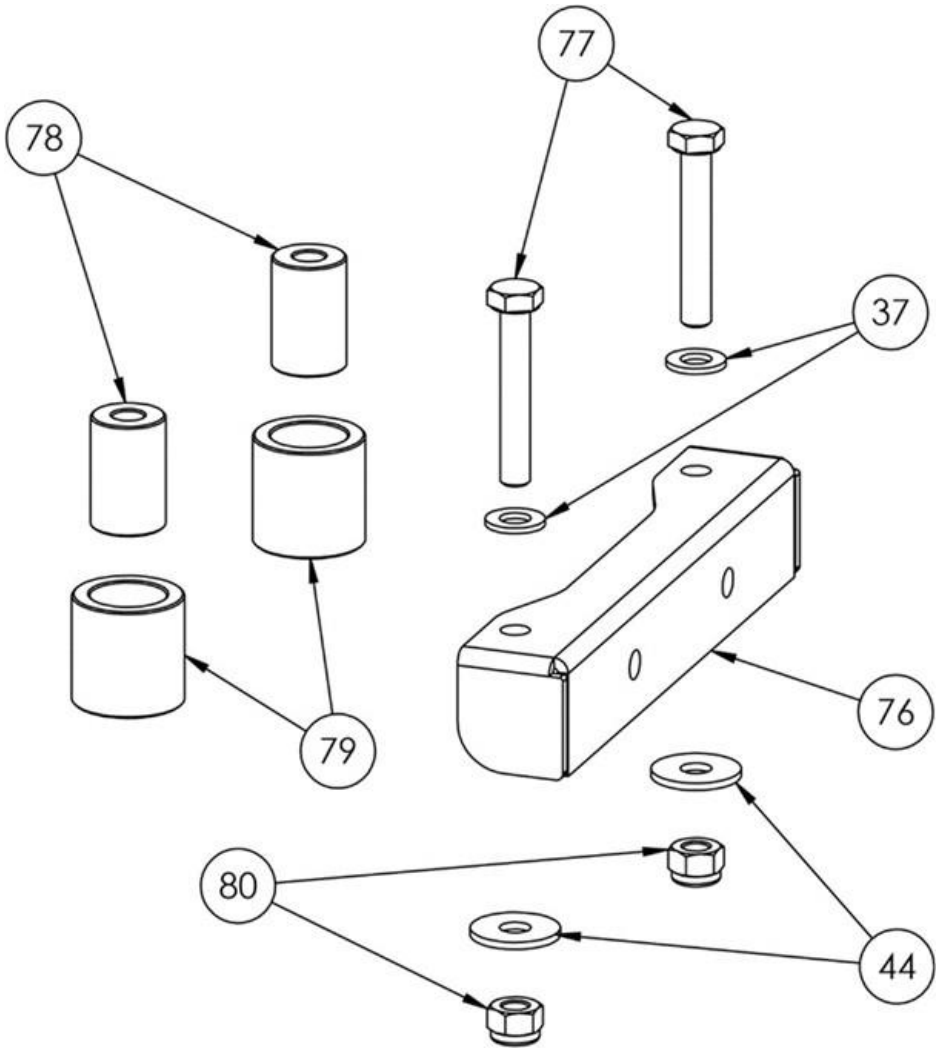

Pos.	Qty.	Code	Item	Description	V	W&T
37	2	0KQ524	BIL00035	FLAT WASHER 8 ZN		
44	2	0D0630	BIL00036	FLAT WASHER 8 x 24 ZN		
76	1	0DF264	CIL00131	BOWL ROLLS SUPPORT		
77	2	0D3488	BIL00051	TE SCREW M8 x 50 ZN		
78	2	0DF265	CIL00133	GV ROLLER BUSH D20 x 31		
79	2	0DF266	CIL00132	BOWL GUIDE ROLLERD		
80	2	0D0641	BIL00050	SELF BLOCKING NUT M8 ZN		

L62

L62

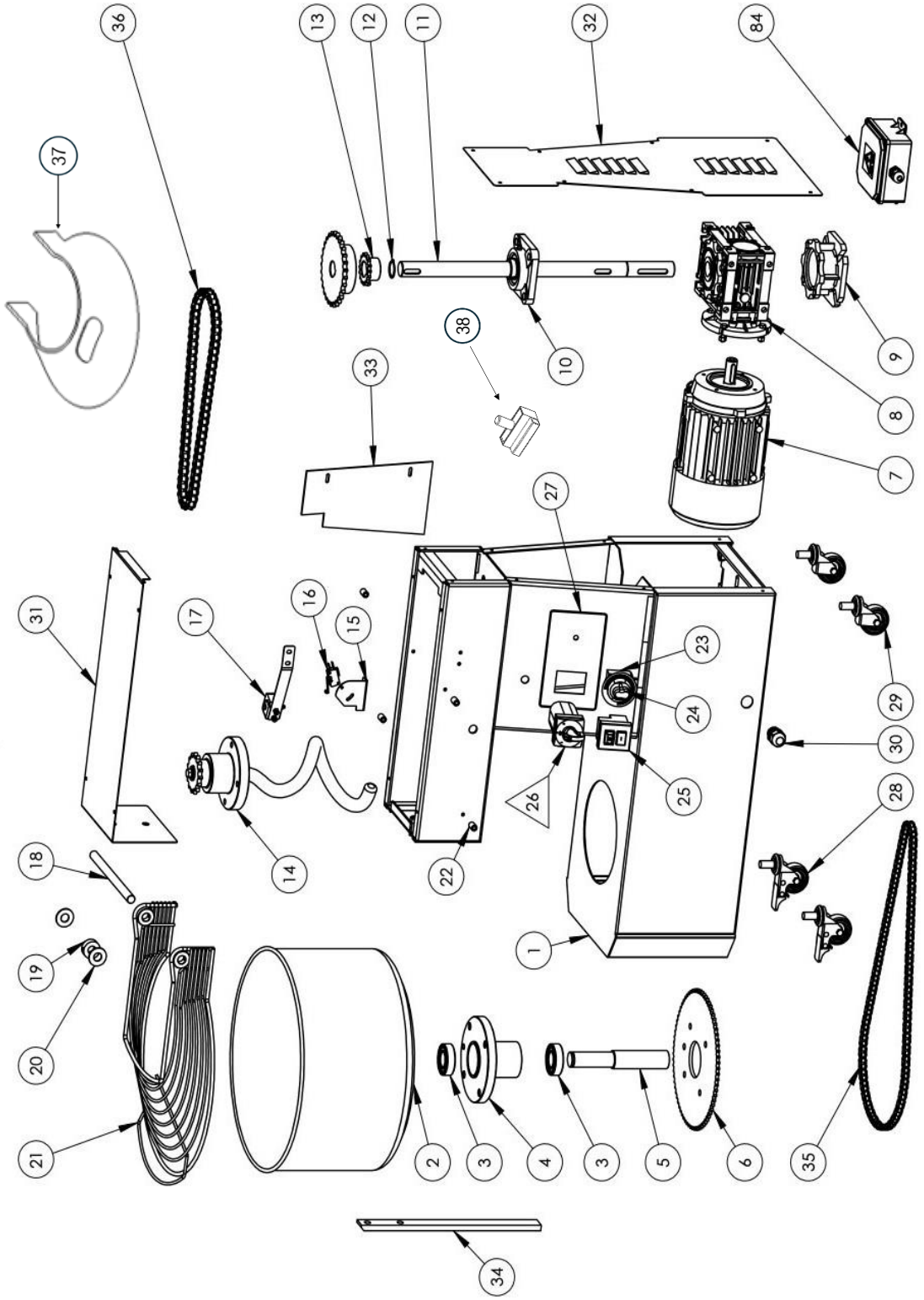
36
13
12
11
32
84
37
38
10
9
33
8
7
27
31
17
16
15
23
24
29
30
26
25
28
14
22
18
1
19
20
21
2
3
4
3
5
6
35
34

L62

Pos.	Qty.	Code	Item	Description	V	W&T
1	1	0DF821	CIL00017	STRUCTURE		
2	1	0DF313	CIL00026	BOWL		
3	2	0KQ394	CIL00093	BEARING 6205 2RS		X
4	1	0DF233	CIL00075	SHARED BOWL SUPPORT		
5	1	0DF234	CIL00067	SHARED BOWL SUPPORT SHAFT		
6	1	0DF280	CIL00081	BOWL CROWN		
7	1	0DF281	CIL00054	MOTOR	X	
8	1	0DF282	CIL00057	GEAR BOX	X	
9	1	0DF283	CIL00060	REDUCER FLANGE		X
10	1	0DF239	CIL00078	DRIVE SHAFT SUPPORT		X
11	1	0DF301	CIL00065	DRIVE SHAFT		
12	1	0KQ499	BIL00007	EXTERNAL SEEGER D25mm		X
13	1	0DF285	CIL00138	BOWL DRIVE PINION		X
14	1	0DF302	CIL00143	SPIRAL ASSEMBLY		
15	1	0DF244	CIL00115	MICROSWITCH BRACKET		
16	1	0DF203	CIL00113	MICROSWITCH D3V-166-1C5	X	
17	1	0DF204	CIL00123	CHAIN TENSIONER ASSEMBLY		
18	1	0DF287	CIL00070	LID SHAFT		
19	1	0DF206	CIL00038	MICROSWITCH HUB		
20	2	0DF801	CIL00127	NYLON LID WASHER		
21	1	0DF314	CIL00236	LID		
22	2	0DF209	CIL00104	PLASTIC STOP SPACER 10 x 15		
23	1	0DF247	CIL00112	TEMPOMATIC TIMER M1 130 M10 SM-T		
24	1	0DF248	MANOP005	NON-GRAD. BLACK KNOB		
25	1	0DF210	CIL00110	BUTTON 0-1		
25	1	0DF249	CIL00111	BUTTON 0-1 400V		
25	1	0DF807	CIL00162	BUTTON 0-1 230V		
26	1	0DF250	CIL000116	SPEED SELECTOR		
27	1	0DF251	CIL00144	SCREEN-PRINTED ADHESIVE LABEL		
28	2	0DF211	CIL00106	WHEEL WITH BRAKE D50 M12		
29	2	0DF212	CIL00107	UNBRAKED WHEEL D50 M12		
30	1	0DF213	CIL00119	PLASTIC CABLE GLAND M20 x 1.5		
31	1	0DF822	CIL00018	UPPER PANEL		
32	1	0DF823	CIL00019	REAR PANEL		
33	1	0DF824	CIL00020	SIDE PANEL		
34	1	0DF307	CIL00044	DOUGH REMOVER PIN		
35	1	0DF319	CIL00139	BOWL CHAIN		X
36	1	0DF308	CIL00103	SPIRAL CHAIN		
37	1	0DF309	CIL00268	LID COVER		X
38	1	0DF376	CIL00274 + CIL00272	FUSE HOLDER + FUSE		
38	1	0DF820	CIL00272	FUSE	X	
84	1	0DF316	CIL00240	THREE PHASE ELECTRICAL SYSTEM BOX	X	

L62 BOWL ASSEMBLY

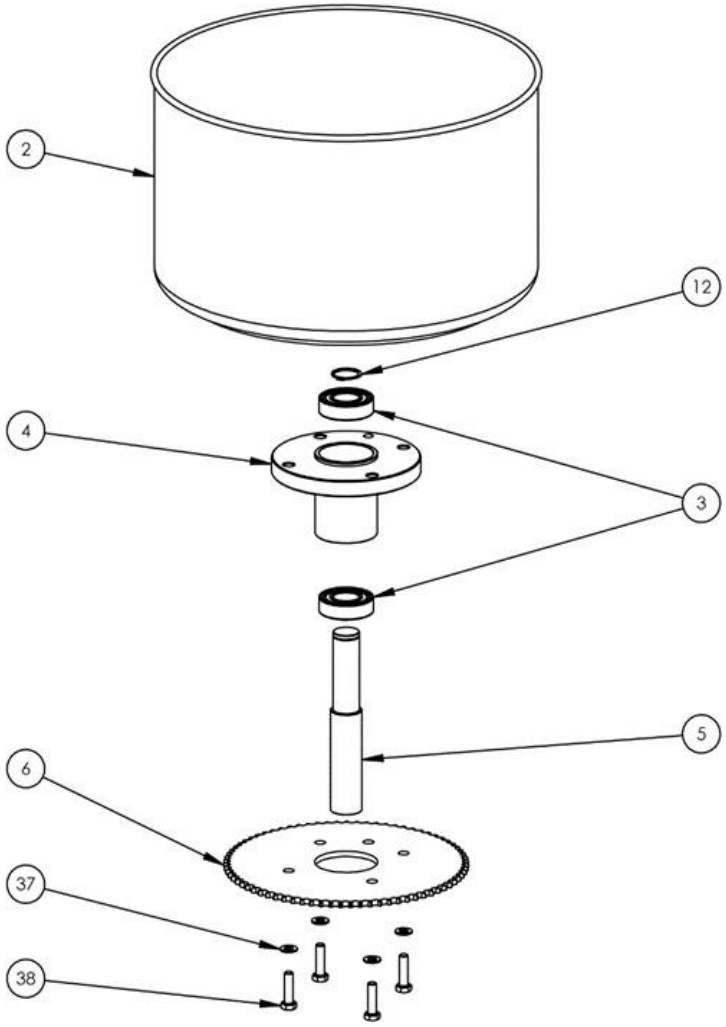

Pos.	Qty.	Code	Item	Description	V	W&T
2	1	0DF313	CIL00026	BOWL L62		
3	2	0KQ394	CIL00093	BEARING 6205 2RS		X
4	1	0DF233	CIL00075	SHARED BOWL SUPPORT		
5	1	0DF234	CIL00067	BOWL SUPPORT SHAFT		
6	1	0DF280	CIL00081	BOWL CROWN		X
12	1	0KQ499	BIL00007	EXTERNAL SEEGER		
37	4	0KQ524	BIL00035	FLAT WASHER 8 ZN		
38	4	0D2329	BIL00034	HEX HEAD SCREW M8 x 30 ZN		

L62 SPIRAL ASSEMBLY

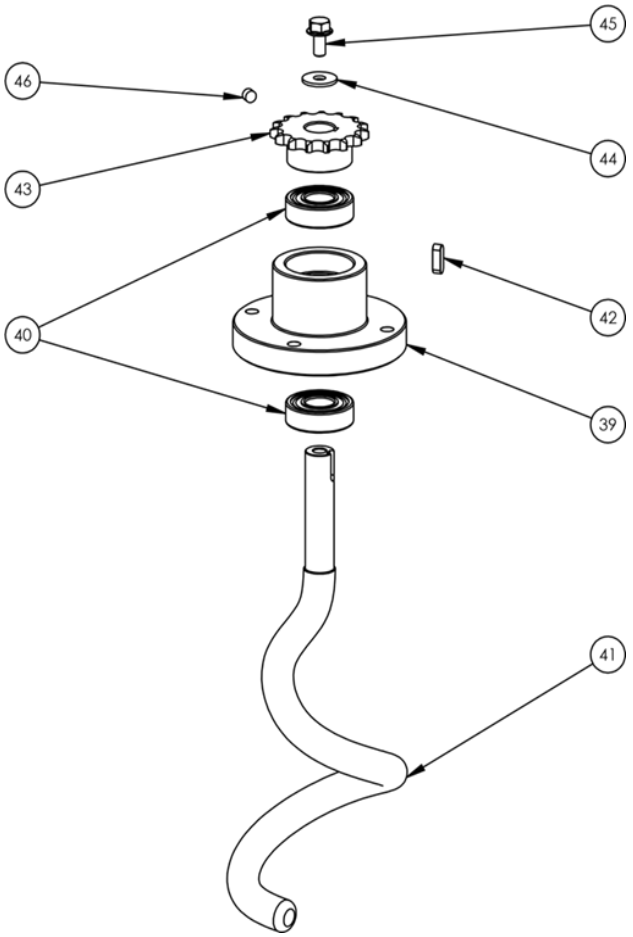

Pos.	Qty.	Code	Item	Description	V	W&T
39	1	0DF296	CIL00073	SPIRAL SUPPORT		
40	2	0KQ395	CIL00092	BEARING 6204 2RS		X
41	1	0DF310	CIL00031	SPIRAL L62		
42	1	0KQ486	BIL00005	ROLL PIN 6X30		
43	1	0DF311	CIL00136	SPIRAL PINION		X
44	1	0D0630	BIL00036	FLAT WASHER 8 X 24 ZN		
45	1	0D0498	BIL00030	HEX HEAD SCREW M8 x 16 ZN		
46	1	0D0559	BIL00020	M8 x 8 POINT GRUB SCREW UNPROCESSED		

L62 DRIVE SHAFT ASSEMBLY

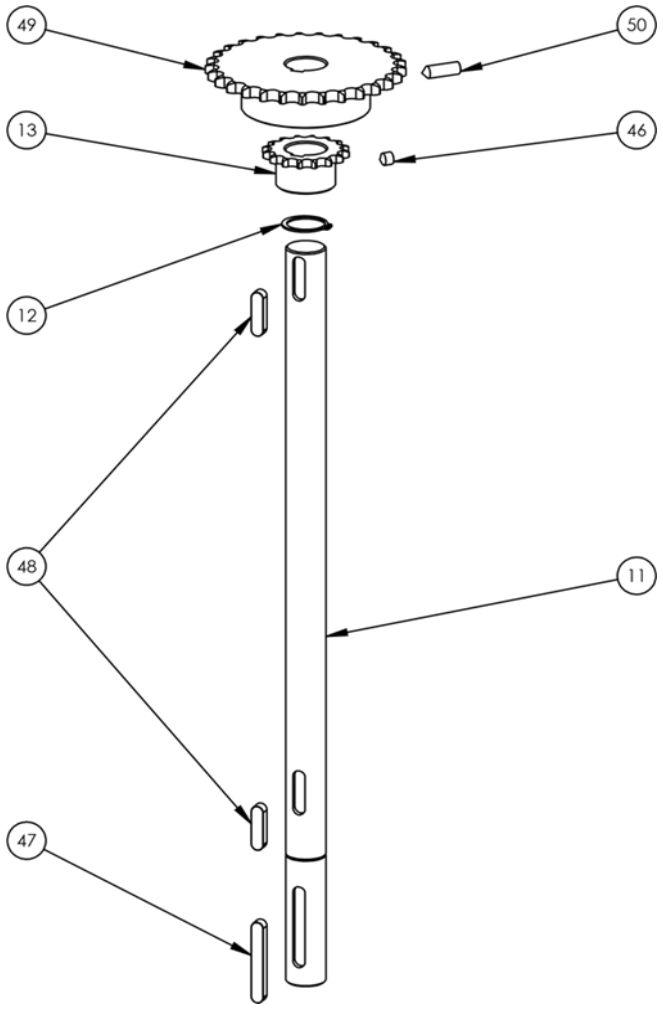

Pos.	Qty.	Code	Item	Description	V	W&T
11	1	0DF301	CIL00065	DRIVE SHAFT		
12	1	0KQ499	BIL00007	EXTERNAL SEEGER		
13	1	0DF315	CIL00089	BOWL DRIVE PINION		X
46	1	0D0559	BIL00020	M8 x 8 POINT GRUB SCREW		
47	1	0D6380	BIL00001	INTERLOCKING TAB 8 x 55		
48	2	0KQ487	BIL00002	INTERLOCKING TAB 8 x 30		
49	1	0DF312	CIL00086	SPIRAL DRIVE PINION		X
50	1	0DF073	BIL00021	M8 x 25 POINT GRUB SCREW		

L62 LID ASSEMBLY

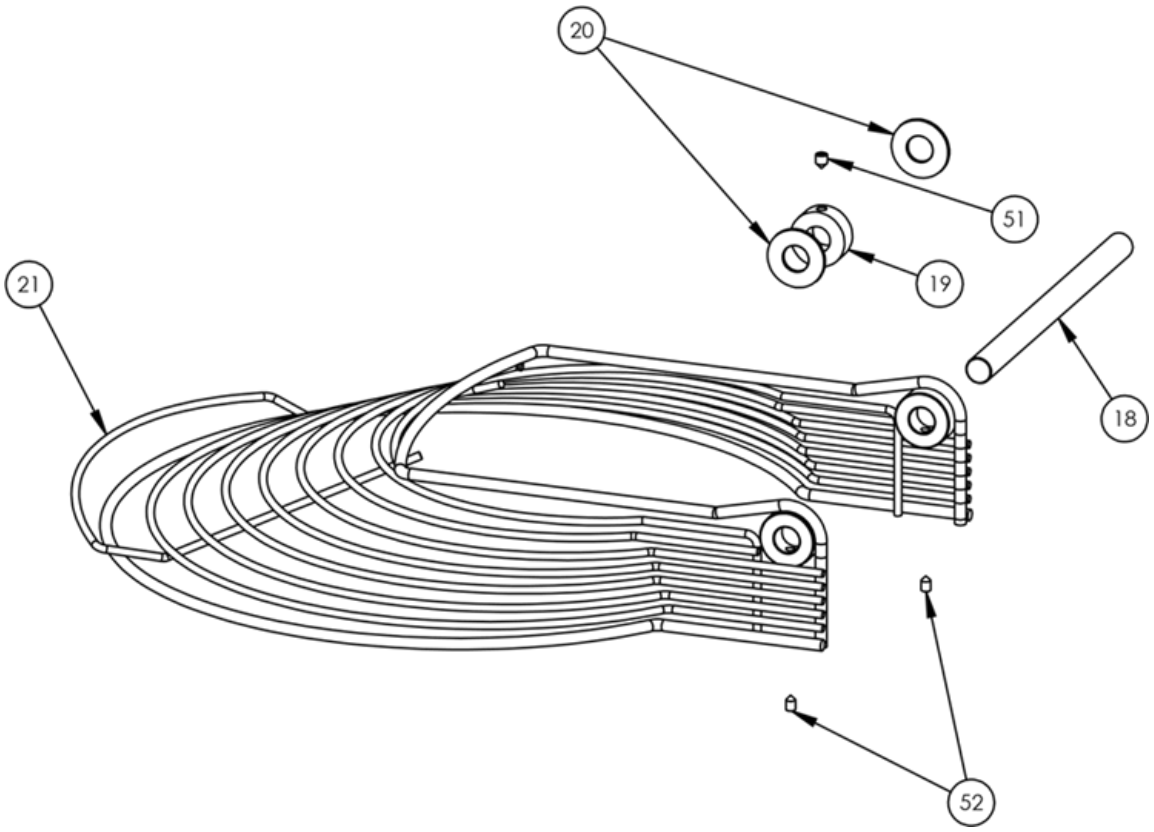

Pos.	Qty.	Code	Item	Description	V	W&T
18	1	0DF287	CIL00070	LID SHAFT		
19	1	0DF206	CIL00038	MICROSWITCH HUB		
20	2	0DF801	CIL00127	NYLON WASHER		
21	1	0DF314	CIL00236	LID L62		
51	1	0D2320	BIL00019	POINT GRUB SCREW M6 x 8 ZN		
52	2	0D2109	BIL00018	POINT GRUB SCREW M5 x 8 ZN		

MICROSWITCH ASSEMBLY

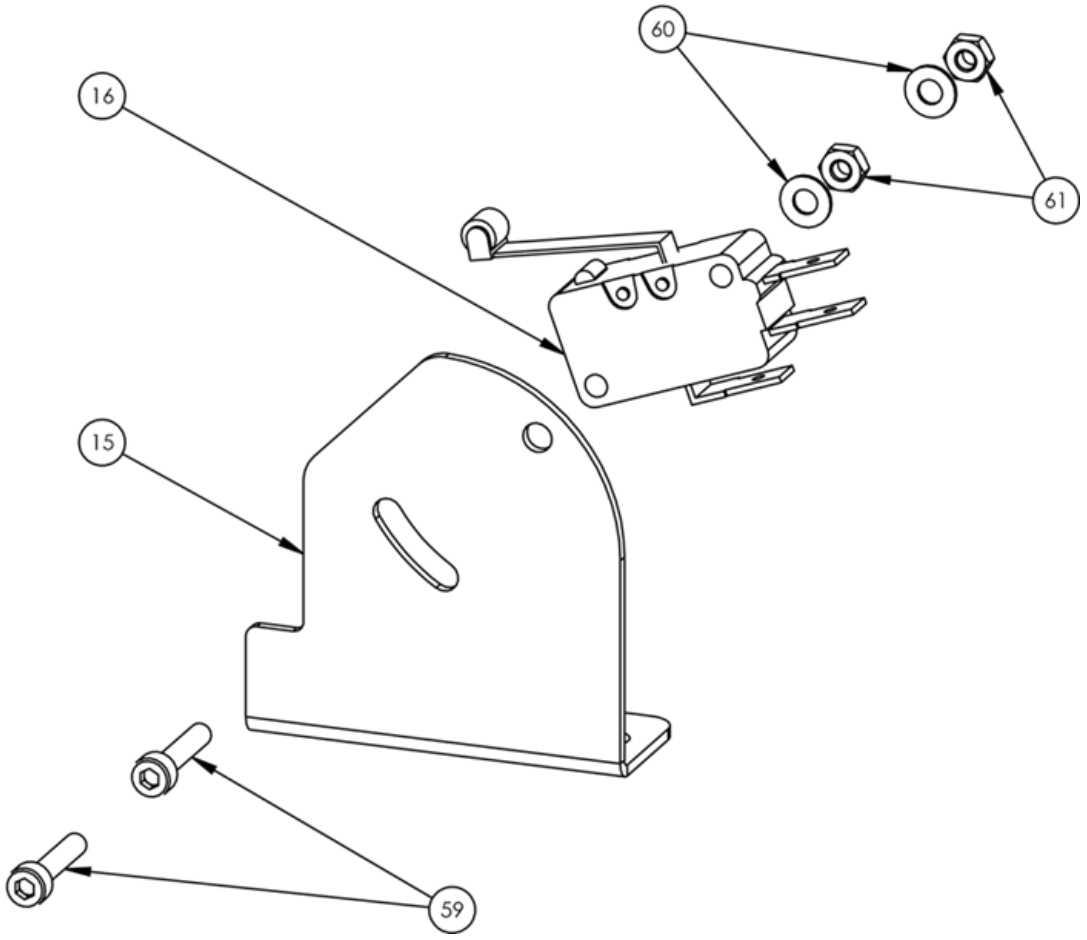

Pos.	Qty.	Code	Item	Description	V	W&T
15	1	0DF244	CIL00115	LID MICROSWITCH BRACKET		
16	1	0DF203	CIL00113	MICROSWITCH D3V	X	
59	2	0KQ511	BIL00015	SOCKET HEAD SCREW		
60	2	0D5620	BIL00043	FLAT WASHER 3 x 7 x 0.5		
61	2	033987	BIL00016	NUT M3 A2		

BOWL GUIDE ASSEMBLY

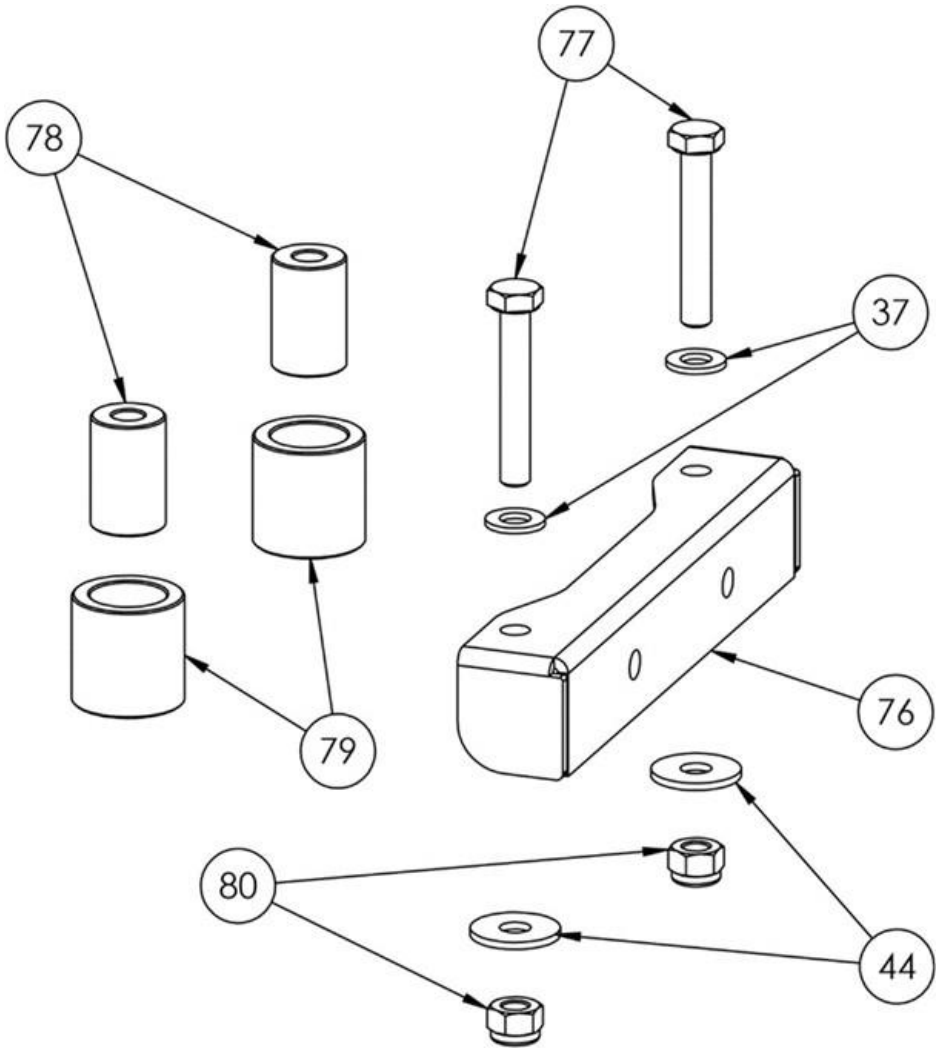

Pos.	Qty.	Code	Item	Description	V	W&T
37	2	0KQ524	BIL00035	FLAT WASHER 8 ZN		
44	2	0D0630	BIL00036	FLAT WASHER 8 x 24 ZN		
76	1	0DF264	CIL00131	BOWL ROLLS SUPPORT		
77	2	0D3488	BIL00051	TE SCREW M8 x 50 ZN		
78	2	0DF265	CIL00133	GV ROLLER BUSH D20 x 31		
79	2	0DF266	CIL00132	BOWL GUIDE ROLLERD		
80	2	0D0641	BIL00050	SELF BLOCKING NUT M8 ZN		

LR22

LR22

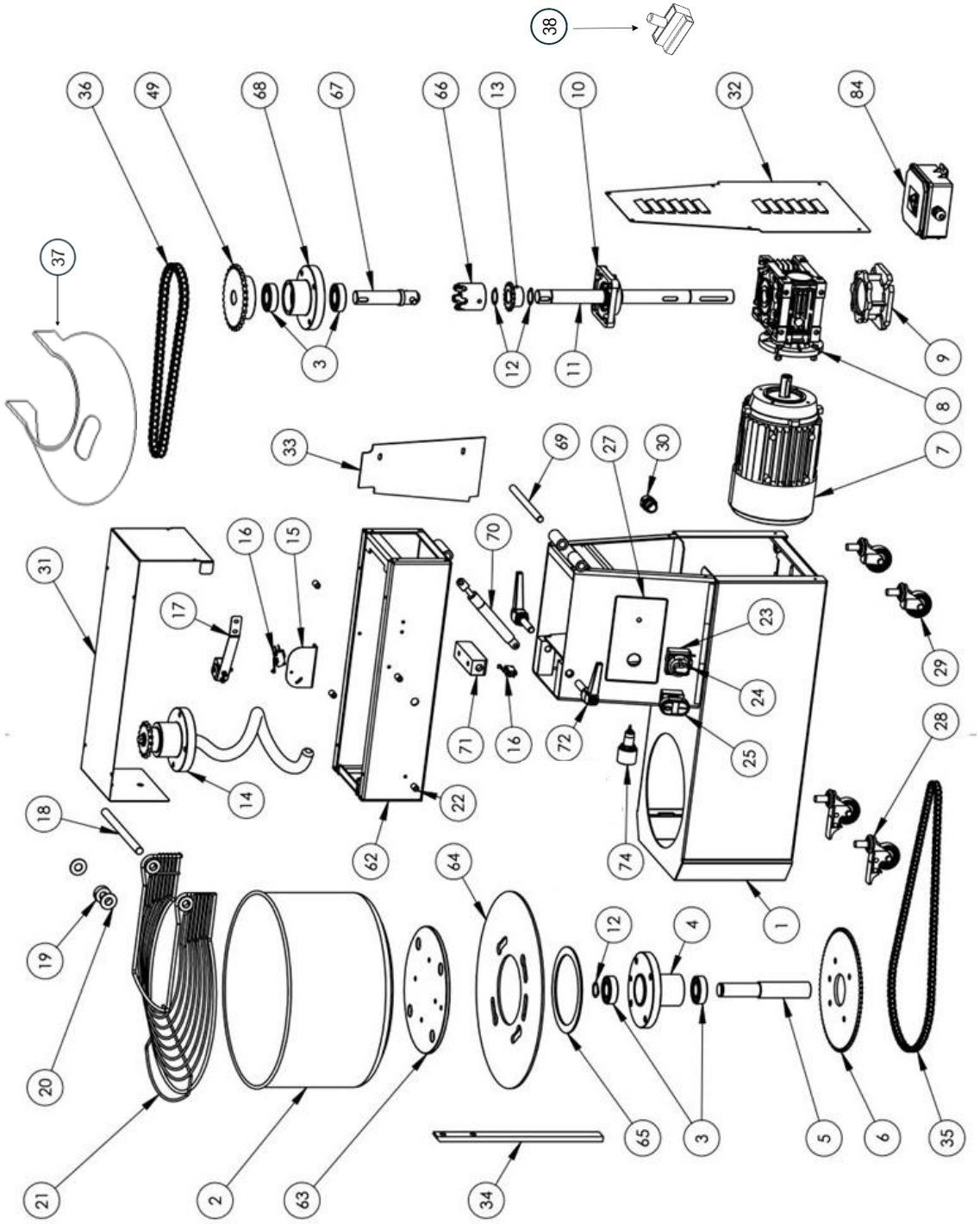
38
36
49
68
67
66
13
10
32
84
37
3
12
11
9
8
7
33
69
27
30
31
16
15
70
17
23
29
24
71
16
72
25
28
14
22
74
18
62
64
1
12
4
19
20
65
3
5
6
35
21
2
63
34

LR22

Pos.	Qty.	Code	Item	Description	V	W&T
1	1	0DF822	CIL00200	STRUCTURE		
2	1	0DF232	CIL00022	BOWL		
3	2	0KQ394	CIL00093	BEARING 6205 2RS		X
4	1	0DF233	CIL00075	SHARED BOWL SUPPORT		
5	1	0DF234	CIL00067	SHARED BOWL SUPPORT SHAFT		
6	1	0DF235	CIL00080	BOWL CROWN		
7	1	0DF236	CIL00048	MOTOR	X	
8	1	0DF237	CIL00056	GEAR BOX	X	
9	1	0DF238	CIL00059	REDUCER FLANGE		X
10	1	0DF197	CIL00077	UCF 204 DRIVE SHAFT SUPPORT		X
11	1	0DF823	CIL00215	DRIVE SHAFT		
12	1	0KQ499	BIL00007	EXTERNAL SEEGER D25mm		X
13	1	0DF242	CIL00088	BOWL DRIVE PINION		X
14	1	0DF243	CIL00141	SPIRAL ASSEMBLY		
15	1	0DF244	CIL00115	MICROSWITCH BRACKET		
16	1	0DF203	CIL00113	MICROSWITCH D3V-166-1C5	X	
17	1	0DF204	CIL00123	CHAIN TENSIONER ASSEMBLY		
18	1	0DF245	CIL00069	LID SHAFT		
19	1	0DF206	CIL00038	MICROSWITCH HUB		
20	2	0DF801	CIL00127	NYLON LID WASHER		
21	1	0DF246	CIL00232	LID		
22	4	0DF209	CIL00104	PLASTIC STOP SPACER 10 x 15		
23	1	0DF247	CIL00112	TEMPOMATIC TIMER M1 130 M10 SM-T		
24	1	0DF248	MANOP005	NON-GRAD. BLACK KNOB		
25	1	0DF824	CIL00161	BUTTON 0-1		
26	1	0DF250	CIL000116	SPEED SELECTOR		
27	1	0DF251	CIL00144	SCREEN-PRINTED ADHESIVE LABEL		
28	2	0DF211	CIL00106	WHEEL WITH BRAKE D50 M12		
29	2	0DF212	CIL00107	UNBRAKED WHEEL D50 M12		
30	1	0DF213	CIL00119	PLASTIC CABLE GLAND M20 x 1.5		
31	1	0DF825	CIL00201	UPPER PANEL		
32	1	0DF826	CIL00202	REAR PANEL		
33	1	0DF827	CIL00203	SIDE PANEL		
34	1	0DF255	CIL00041	DOUGH REMOVER PIN		
35	1	0DF256	CIL00100	BOWL CHAIN 3/8" 153P		X
36	1	0DF317	CIL00095	SPIRAL CHAIN ½" 69P		
37	1	0DF258	CIL00265	LID COVER		X
38	1	0DF375	CIL00274 + CIL00270	FUSE HOLDER + FUSE		
38	1	0DF811	CIL00270	FUSE	X	
62	1	0DF828	CIL00321	HEAD STRUCTURE		
63	1	0DF829	CIL00221	BOWL SUPPORT FLANGE		
64	1	0DF830	CIL00204	BOWL LOCKING DISC		
65	1	0DF831	CIL00222	RING, 3mm, BOWL-HOLDER DISC		

66	1	0DF832	CIL00219	HARDENED JOINT		
67	1	0DF833	CIL00218	DRIVE SUPPORT SHAFT WITH PIN		
68	1	0DF834	CIL00220	DRIVE SUPPORT SHAFT SUPPORT		
69	1	0DF265	CIL00133	GALVANISED PIN D12 x 128mm FOR B0WL ROLLER		
70	1	0DF835	CIL00229	GAS PISTON		X
71	1	0DF836	CIL00324	HEAD FIXING BLOCK		
72	1	0DF837	CIL00230	HEAD LOCK LEVER HANDLE		
74	1	0DF838	CIL00252	PROXIMITY ASSEMBLY	X	
84	1	0DF316	CIL00240	THREE PHASE ELECTRICAL SYSTEM BOX	X	

LR22 BOWL ASSEMBLY

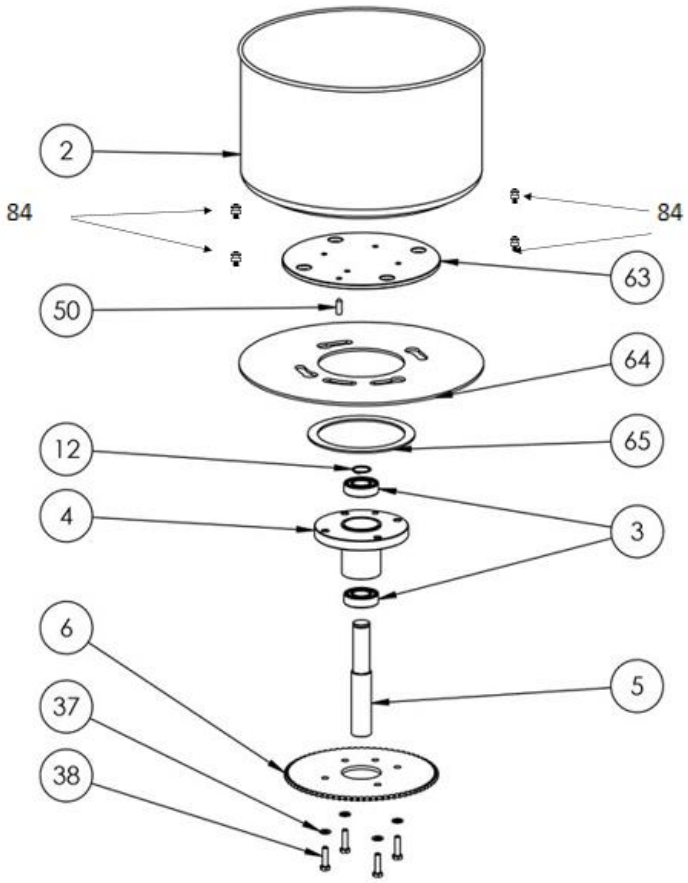

Pos.	Qty.	Code	Item	Description	V	W&T
2	1	0DF232	CIL00022	BOWL LR22		
3	2	0KQ394	CIL00093	BEARING 6205 2RS		X
4	1	0DF233	CIL00075	SHARED BOWL SUPPORT		
5	1	0DF234	CIL00067	BOWL SUPPORT SHAFT		
6	1	0DF235	CIL00080	BOWL CROWN		X
12	1	0KQ499	BIL00007	EXTERNAL SEEGER		
37	4	0KQ524	BIL00035	FLAT WASHER 8 ZN		
38	4	0D2329	BIL00034	HEX HEAD SCREW M8 x 30 ZN		
50	1	0DF073	BIL00021	M8 x 25 RAW POINTED SCREW		
63	1	0DF829	CIL00221	BOWL SUPPORT FLANGE		
64	1	0DF830	CIL00204	LOCKING DISC		
65	1	0DF831	CIL00222	DISK RING		
84	4	0DF839	CIL00262	SCREW FOR FIXING BOWL		

LR22 SPIRAL ASSEMBLY

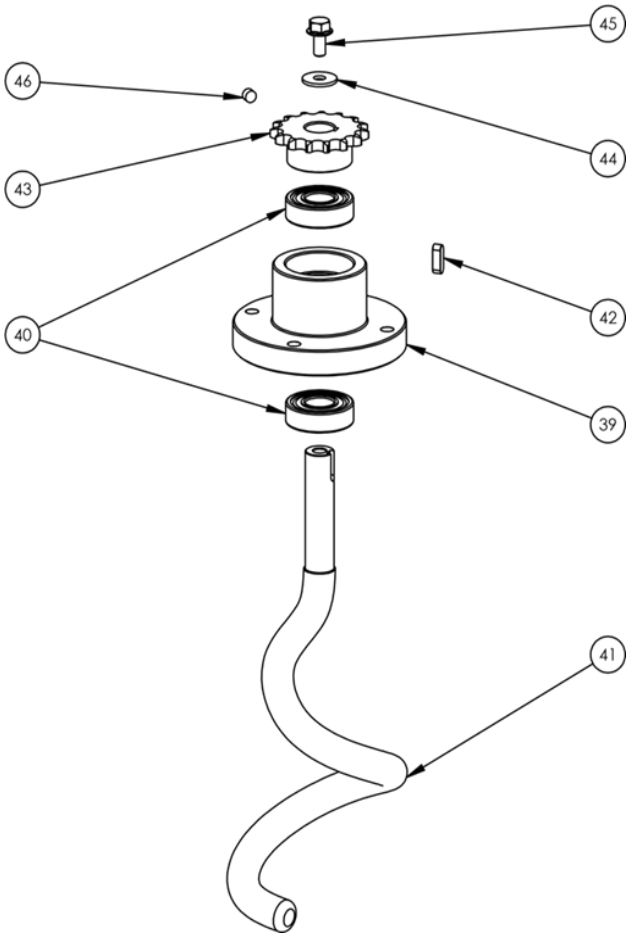

Pos.	Qty.	Code	Item	Description	V	W&T
39	1	0DF259	CIL00072	SPIRAL SUPPORT		
40	2	0D0035	CIL00091	BEARING 6202 2RS		X
41	1	0DF260	CIL00028	SPIRAL LR22		
42	1	0KQ486	BIL00005	INTERLOCKING TAB 6x20		
43	1	0DF261	CIL00083	SPIRAL PINION		X
44	1	0D0630	BIL00036	FLAT WASHER 8 X 24 ZN		
45	1	0D0498	BIL00030	HEX HEAD SCREW M8 x 16 ZN		
46	1	0D0559	BIL00020	M8 x 8 POINT GRUB SCREW UNPROCESSED		

LR22 DRIVE SHAFT ASSEMBLY

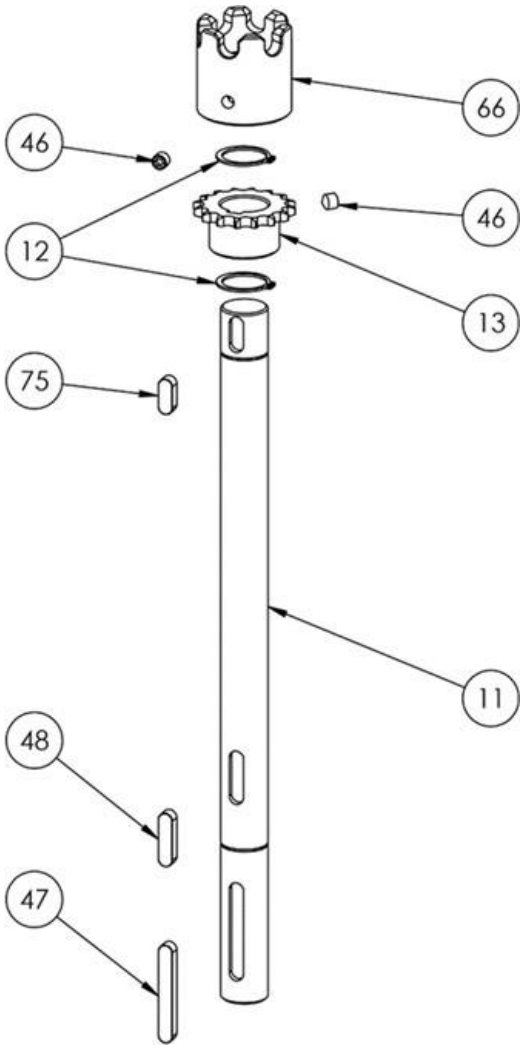

Pos.	Qty.	Code	Item	Description	V	W&T
11	1	0DF823	CIL00215	DRIVE SHAFT		
12	2	0KQ499	BIL00007	EXTERNAL SEEGER		
13	1	0DF242	CIL00088	BOWL DRIVE PINION		
46	2	0D0559	BIL00020	M8 x 8 POINT GRUB SCREW		
47	1	0D6380	BIL00001	INTERLOCKING TAB 8 x 55		
48	1	0KQ487	BIL00002	INTERLOCKING TAB 8 x 30		
66	1	0DF832	CIL00219	HARDENED JOINT D50 x 50		
75	1	0D2334	BIL00047	INTERLOCKING TAB 8 x 20		

TOP DRIVE SHAFT ASSEMBLY

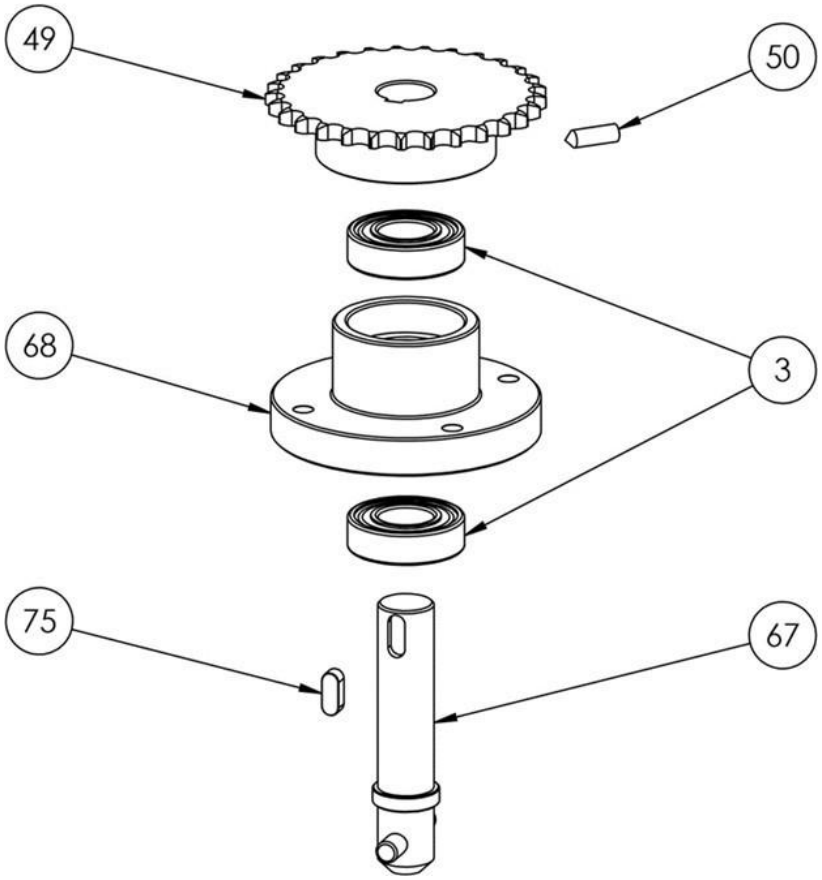

Pos.	Qty.	Code	Item	Description	V	W&T
3	2	0KQ394	CIL00093	BEARING 6205 2RS		X
49	1	0DF263	CIL00137	SPIRAL DRIVE PINION L10 Z25 3/8" D20		
50	1	0DF073	BIL00021	M8 x 25 POINT GRUB SCREW UNPROCESSED		
67	1	0DF833	CIL00218	DRIVE SUPPORT SHAFT WITH PIN		
75	1	0D2334	BIL00047	INTERLOCKING TAB 8 x 20		
68	1	0DF834	CIL00220	DRIVE SUPPORT SHAFT SUPPORT		

LR22 LID ASSEMBLY

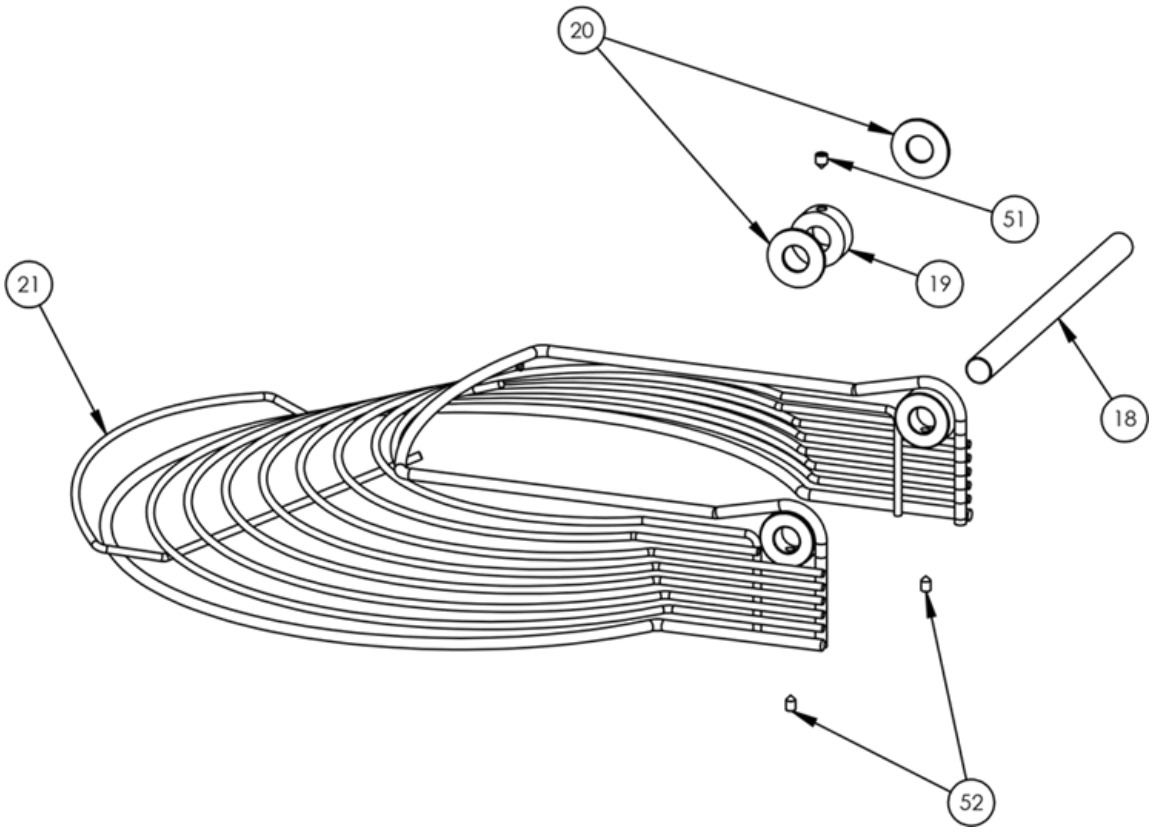

Pos.	Qty.	Code	Item	Description	V	W&T
18	1	0DF245	CIL00069	LID SHAFT		
19	1	0DF206	CIL00038	MICROSWITCH HUB		
20	2	0DF801	CIL00127	NYLON WASHER		
21	1	0DF246	CIL00232	LID LR22		
51	1	0D2320	BIL00019	POINT GRUB SCREW M6 x 8 ZN		
52	2	0D2109	BIL00018	POINT GRUB SCREW M5 x 8 ZN		

MICROSWITCH ASSEMBLY

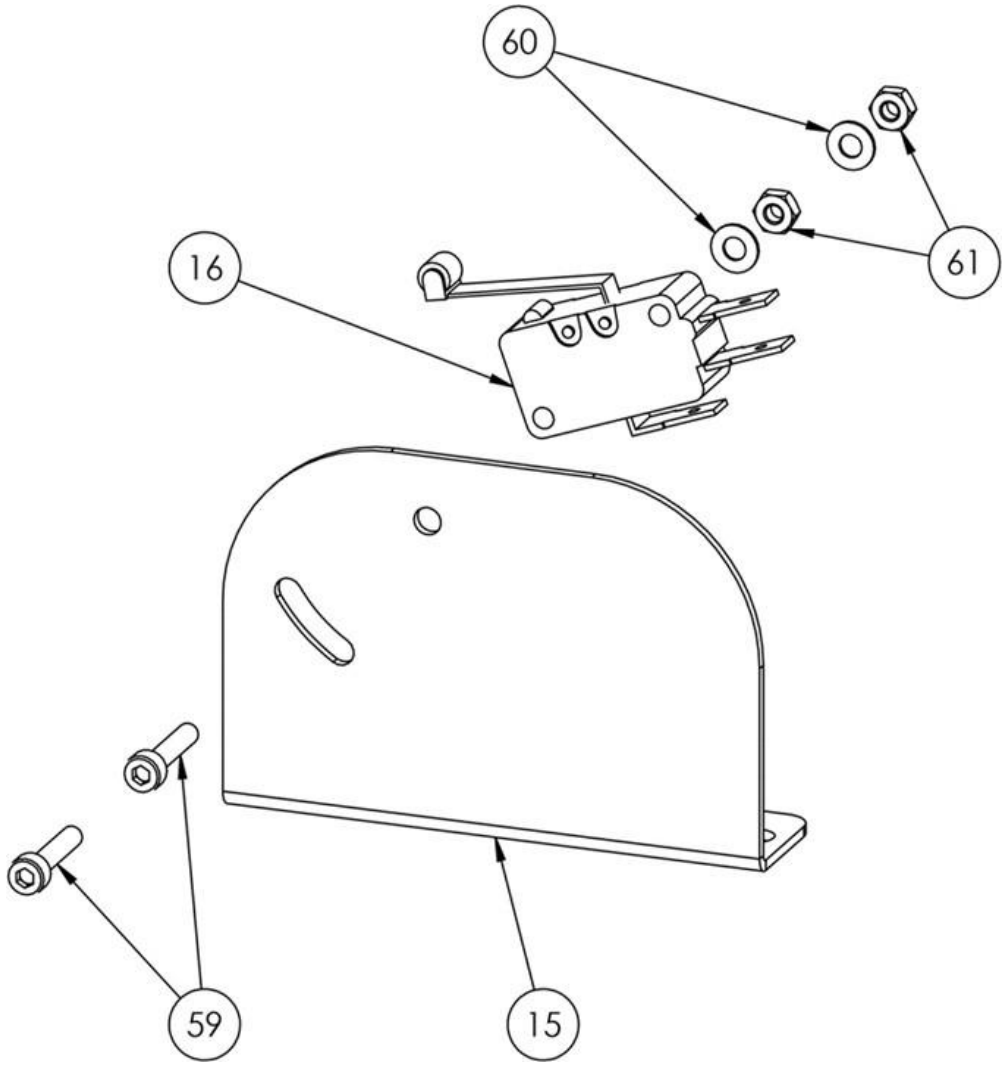

Pos.	Qty.	Code	Item	Description	V	W&T
15	1	0DF840	CIL00506	LID MICROSWITCH BRACKET		
16	1	0DF203	CIL00113	MICROSWITCH D3V	X	
59	2	0KQ511	BIL00015	SOCKET HEAD SCREW		
60	2	0D5620	BIL00043	FLAT WASHER 3 x 7 x 0.5		
61	2	033987	BIL00016	NUT M3 A2		

LR33

LR33

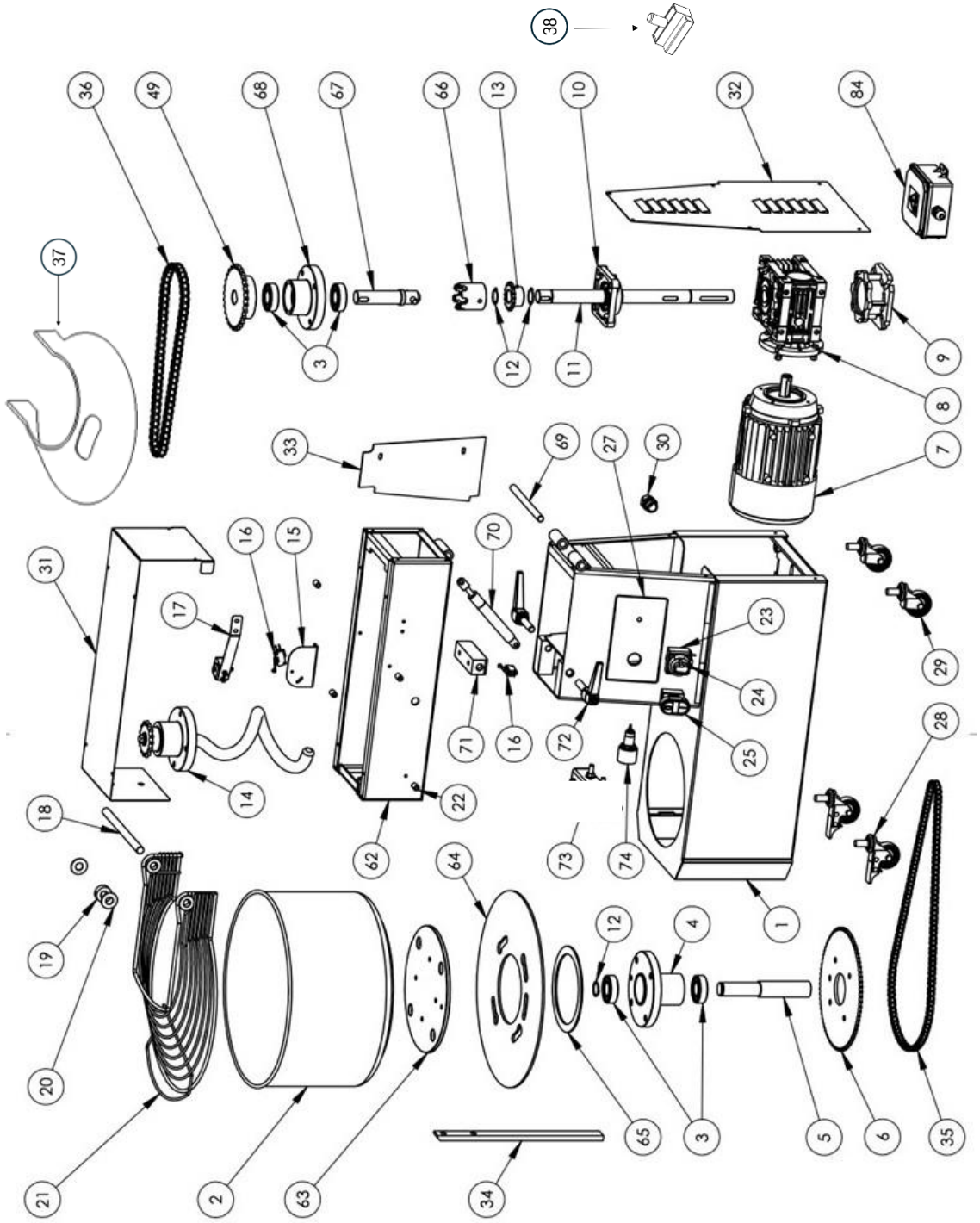
38
36
49
68
67
66
13
10
32
84
37
3
12
11
9
8
7
33
69
27
30
31
16
15
70
17
23
29
24
71
16
72
25
28
14
22
18
62
64
73
74
1
12
4
19
20
65
3
5
6
35
21
2
63
34

LR33

Pos.	Qty.	Code	Item	Description	V	W&T
1	1	0DF841	CIL00205	STRUCTURE		
2	1	0DF232	CIL00023	BOWL		
3	2	0KQ394	CIL00093	BEARING 6205 2RS		X
4	1	0DF233	CIL00075	SHARED BOWL SUPPORT		
5	1	0DF234	CIL00067	SHARED BOWL SUPPORT SHAFT		
6	1	0DF235	CIL00080	BOWL CROWN		
7	1	0DF236	CIL00048	MOTOR	X	
8	1	0DF237	CIL00056	GEAR BOX	X	
9	1	0DF238	CIL00059	REDUCER FLANGE		X
10	1	0DF197	CIL00077	UCF 204 DRIVE SHAFT SUPPORT		X
11	1	0DF842	CIL00216	DRIVE SHAFT		
12	1	0KQ499	BIL00007	EXTERNAL SEEGER D25mm		X
13	1	0DF242	CIL00088	BOWL DRIVE PINION		X
14	1	0DF243	CIL00263	SPIRAL ASSEMBLY		
15	1	0DF244	CIL00115	MICROSWITCH BRACKET		
16	1	0DF203	CIL00113	MICROSWITCH D3V-166-1C5	X	
17	1	0DF204	CIL00123	CHAIN TENSIONER ASSEMBLY		
18	1	0DF245	CIL00069	LID SHAFT		
19	1	0DF206	CIL00038	MICROSWITCH HUB		
20	2	0DF801	CIL00127	NYLON LID WASHER		
21	1	0DF271	CIL00233	LID		
22	4	0DF209	CIL00104	PLASTIC STOP SPACER 10 x 15		
23	1	0DF247	CIL00112	TEMPOMATIC TIMER M1 130 M10 SM-T		
24	1	0DF248	MANOP005	NON-GRAD. BLACK KNOB		
25	1	0DF824	CIL00161	BUTTON 0-1		
26	1	0DF250	CIL000116	SPEED SELECTOR		
27	1	0DF251	CIL00144	SCREEN-PRINTED ADHESIVE LABEL		
28	2	0DF211	CIL00106	WHEEL WITH BRAKE D50 M12		
29	2	0DF212	CIL00107	UNBRAKED WHEEL D50 M12		
30	1	0DF213	CIL00119	PLASTIC CABLE GLAND M20 x 1.5		
31	1	0DF843	CIL00206	UPPER PANEL		
32	1	0DF844	CIL00207	REAR PANEL		
33	1	0DF845	CIL00208	SIDE PANEL		
34	1	0DF275	CIL00042	DOUGH REMOVER PIN		
35	1	0DF276	CIL00101	BOWL CHAIN 3/8" 153P		X
36	1	0DF317	CIL00095	SPIRAL CHAIN ½" 69P		
37	1	0DF294	CIL00266	LID COVER		X
38	1	0DF375	CIL00274 + CIL00270	FUSE HOLDER + FUSE		
38	1	0DF811	CIL00270	FUSE	X	
62	1	0DF846	CIL00322	HEAD STRUCTURE		
63	1	0DF829	CIL00221	BOWL SUPPORT FLANGE		
64	1	0DF847	CIL00209	BOWL LOCKING DISC		
65	1	0DF831	CIL00222	RING, 3mm, BOWL-HOLDER DISC		

66	1	0DF832	CIL00219	HARDENED JOINT		
67	1	0DF833	CIL00218	DRIVE SUPPORT SHAFT WITH PIN		
68	1	0DF834	CIL00220	DRIVE SUPPORT SHAFT SUPPORT		
69	1	0DF265	CIL00133	GALVANISED PIN D12 x 128mm FOR B0WL ROLLER		
70	1	0DF835	CIL00229	GAS PISTON		X
71	1	0DF848	CIL00325	HEAD FIXING BLOCK		
72	1	0DF837	CIL00230	HEAD LOCK LEVER HANDLE		
74	1	0DF838	CIL00252	PROXIMITY ASSEMBLY	X	
84	1	0DF316	CIL00240	THREE PHASE ELECTRICAL SYSTEM BOX	X	

LR33 BOWL ASSEMBLY

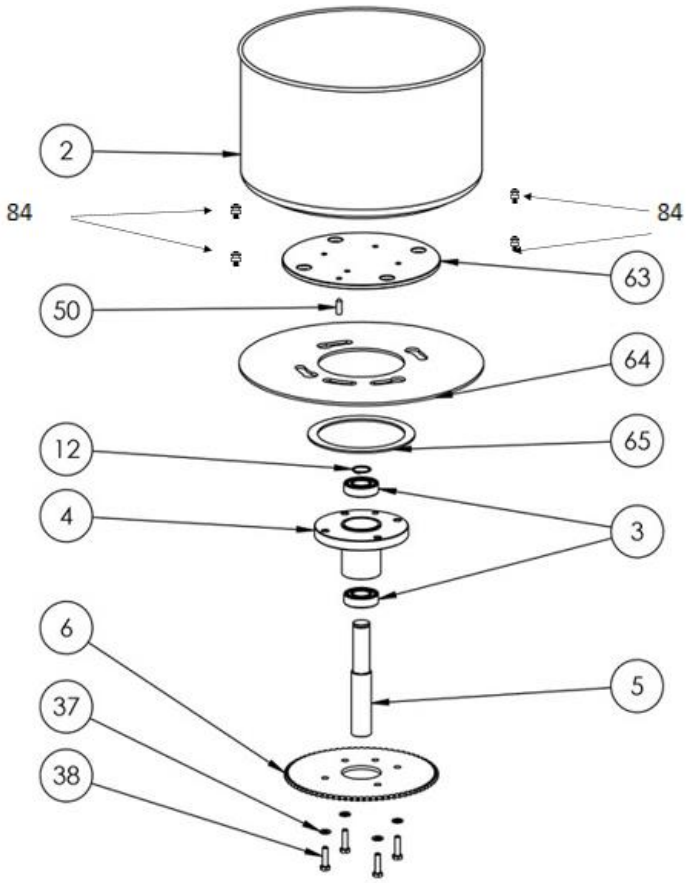

Pos.	Qty.	Code	Item	Description	V	W&T
2	1	0DF268	CIL00023	BOWL LR33		
3	2	0KQ394	CIL00093	BEARING 6205 2RS		X
4	1	0DF233	CIL00075	SHARED BOWL SUPPORT		
5	1	0DF234	CIL00067	BOWL SUPPORT SHAFT		
6	1	0DF235	CIL00080	BOWL CROWN		X
12	1	0KQ499	BIL00007	EXTERNAL SEEGER		
37	4	0KQ524	BIL00035	FLAT WASHER 8 ZN		
38	4	0D2329	BIL00034	HEX HEAD SCREW M8 x 30 ZN		
50	1	0DF073	BIL00021	M8 x 25 RAW POINTED SCREW		
63	1	0DF829	CIL00221	BOWL SUPPORT FLANGE		
64	1	0DF847	CIL00209	LOCKING DISC		
65	1	0DF831	CIL00222	DISK RING		
84	4	0DF839	CIL00262	SCREW FOR FIXING BOWL		

LR33 SPIRAL ASSEMBLY

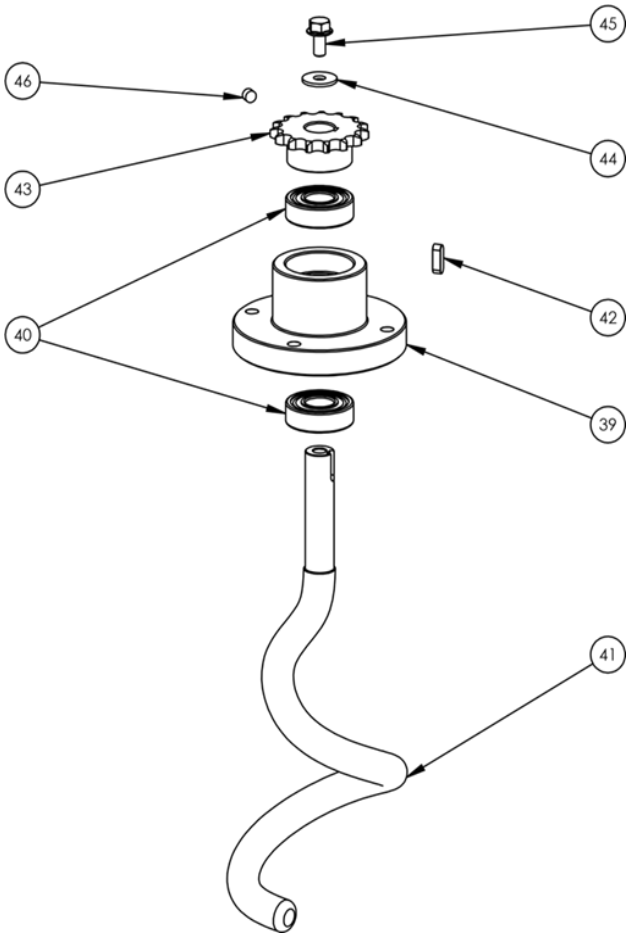

Pos.	Qty.	Code	Item	Description	V	W&T
39	1	0DF259	CIL00072	SPIRAL SUPPORT		
40	2	0D0035	CIL00091	BEARING 6202 2RS		X
41	1	0DF277	CIL00029	SPIRAL LR33		
42	1	0KQ486	BIL00005	INTERLOCKING TAB 6x20		
43	1	0DF261	CIL00083	SPIRAL PINION		X
44	1	0D0630	BIL00036	FLAT WASHER 8 X 24 ZN		
45	1	0D0498	BIL00030	HEX HEAD SCREW M8 x 16 ZN		
46	1	0D0559	BIL00020	M8 x 8 POINT GRUB SCREW UNPROCESSED		

LR33 DRIVE SHAFT ASSEMBLY

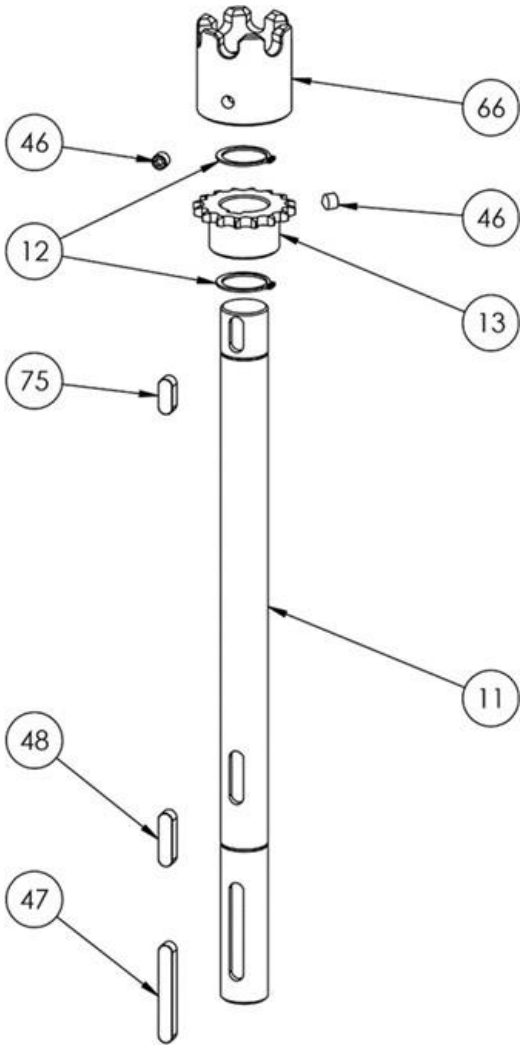

Pos.	Qty.	Code	Item	Description	V	W&T
11	1	0DF842	CIL00216	DRIVE SHAFT		
12	2	0KQ499	BIL00007	EXTERNAL SEEGER		
13	1	0DF242	CIL00088	BOWL DRIVE PINION		
46	2	0D0559	BIL00020	M8 x 8 POINT GRUB SCREW		
47	1	0D6380	BIL00001	INTERLOCKING TAB 8 x 55		
48	1	0KQ487	BIL00002	INTERLOCKING TAB 8 x 30		
66	1	0DF832	CIL00219	HARDENED JOINT D50 x 50		
75	1	0D2334	BIL00047	INTERLOCKING TAB 8 x 20		

TOP DRIVE SHAFT ASSEMBLY

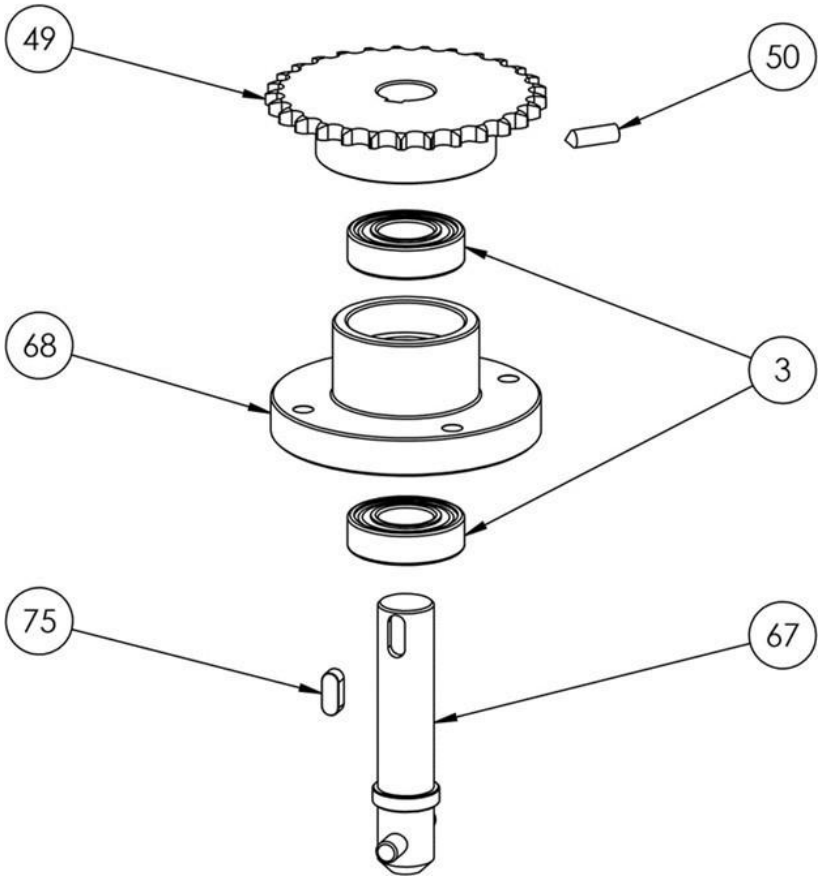

Pos.	Qty.	Code	Item	Description	V	W&T
3	2	0KQ394	CIL00093	BEARING 6205 2RS		X
49	1	0DF263	CIL00137	SPIRAL DRIVE PINION L10 Z25 3/8" D20		
50	1	0DF073	BIL00021	M8 x 25 POINT GRUB SCREW UNPROCESSED		
67	1	0DF833	CIL00218	DRIVE SUPPORT SHAFT WITH PIN		
75	1	0D2334	BIL00047	INTERLOCKING TAB 8 x 20		
68	1	0DF834	CIL00220	DRIVE SUPPORT SHAFT SUPPORT		

LR33 LID ASSEMBLY

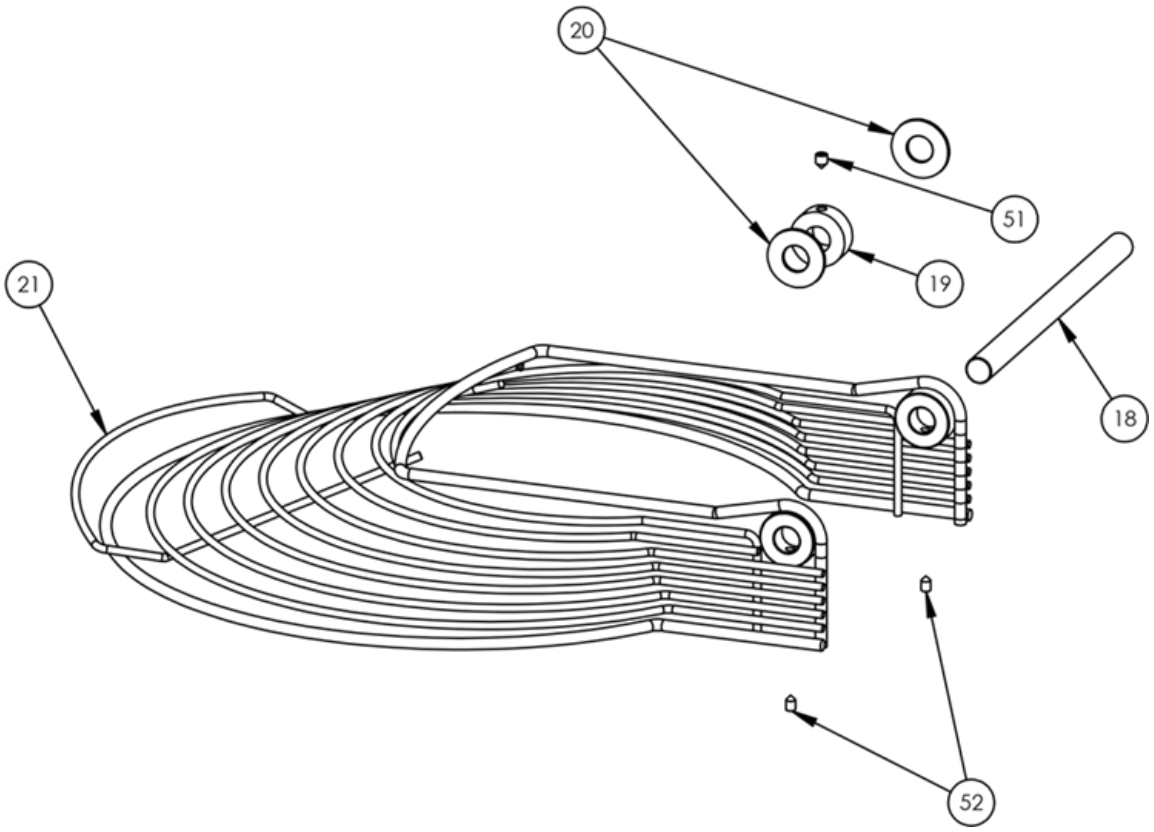

Pos.	Qty.	Code	Item	Description	V	W&T
18	1	0DF245	CIL00069	LID SHAFT		
19	1	0DF206	CIL00038	MICROSWITCH HUB		
20	2	0DF801	CIL00127	NYLON WASHER		
21	1	0DF271	CIL00233	LID LR33		
51	1	0D2320	BIL00019	POINT GRUB SCREW M6 x 8 ZN		
52	2	0D2109	BIL00018	POINT GRUB SCREW M5 x 8 ZN		

MICROSWITCH ASSEMBLY

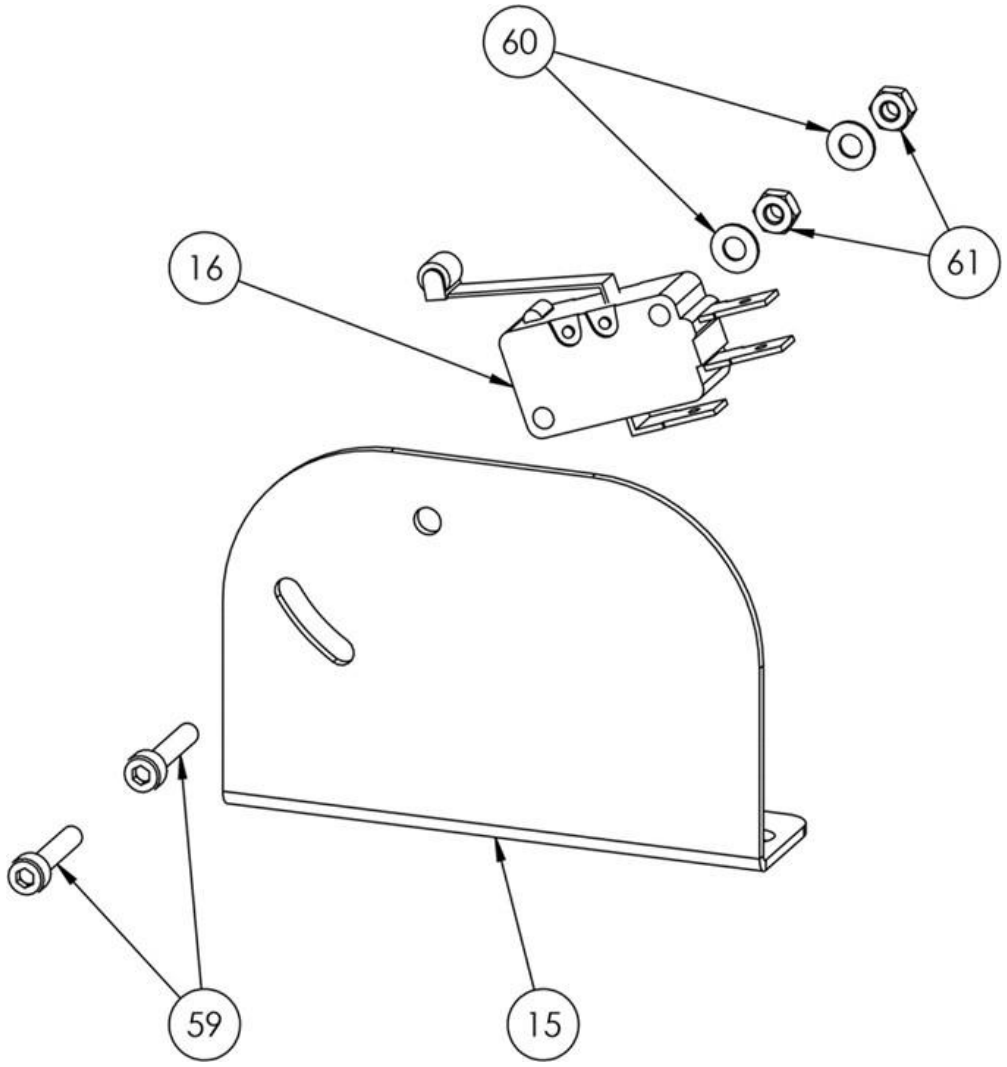

Pos.	Qty.	Code	Item	Description	V	W&T
15	1	0DF840	CIL00506	LID MICROSWITCH BRACKET		
16	1	0DF203	CIL00113	MICROSWITCH D3V	X	
59	2	0KQ511	BIL00015	SOCKET HEAD SCREW		
60	2	0D5620	BIL00043	FLAT WASHER 3 x 7 x 0.5		
61	2	033987	BIL00016	NUT M3 A2		

LR42

LR42

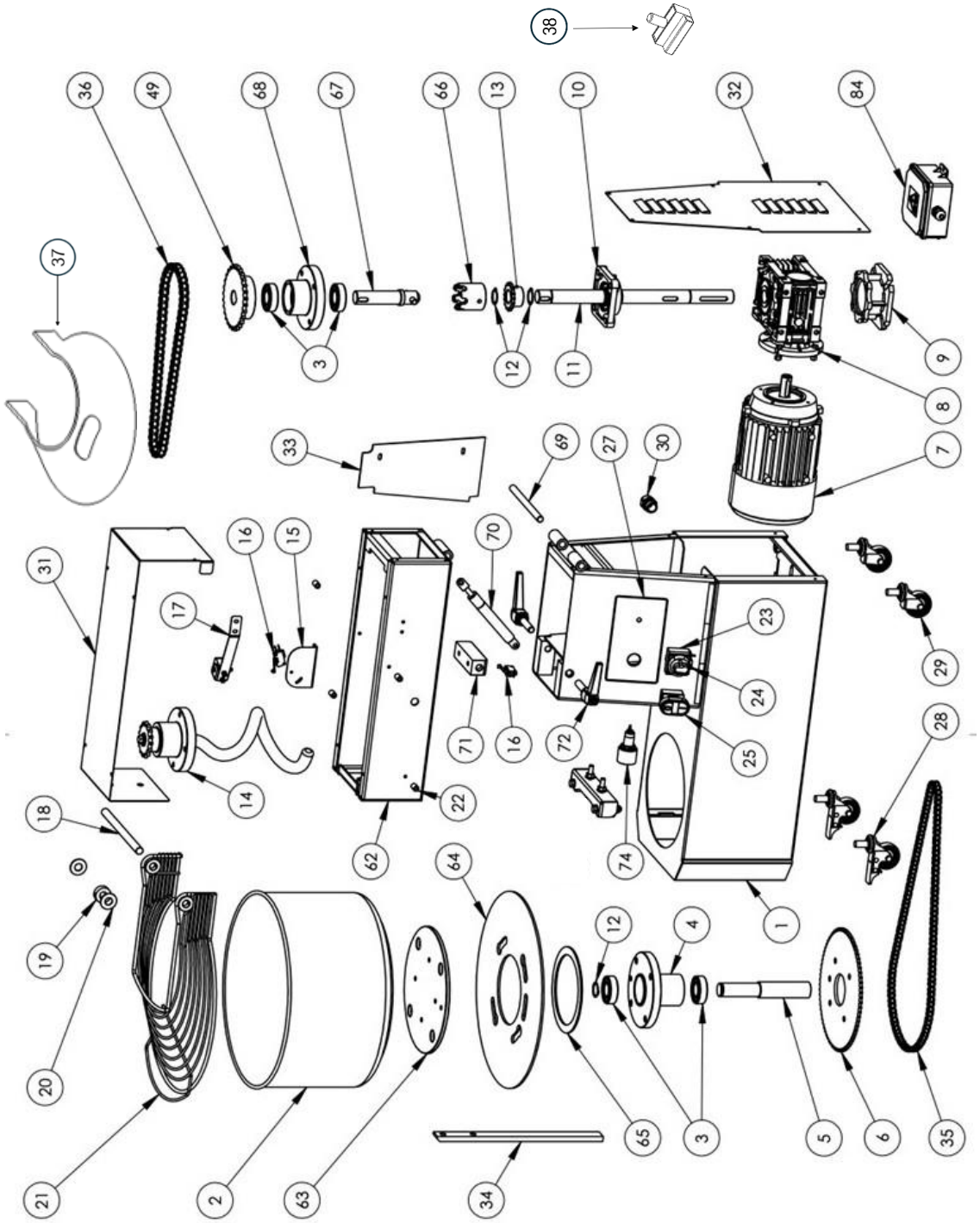
38
36
49
68
67
66
13
10
32
84
37
3
12
11
9
8
7
33
69
27
30
31
16
15
70
17
23
29
24
71
16
72
25
28
14
22
74
18
62
64
1
12
4
19
20
65
3
5
6
35
21
2
63
34

LR42

Pos.	Qty.	Code	Item	Description	V	W&T
1	1	0DF849	CIL00210	STRUCTURE		
2	1	0DF279	CIL00024	BOWL		
3	2	0KQ394	CIL00093	BEARING 6205 2RS		X
4	1	0DF233	CIL00075	SHARED BOWL SUPPORT		
5	1	0DF234	CIL00067	SHARED BOWL SUPPORT SHAFT		
6	1	0DF235	CIL00081	BOWL CROWN		
7	1	0DF281	CIL00054	MOTOR	X	
8	1	0DF282	CIL00057	GEAR BOX	X	
9	1	0DF283	CIL00060	REDUCER FLANGE		X
10	1	0DF197	CIL00077	UCF 204 DRIVE SHAFT SUPPORT		X
11	1	0DF850	CIL00217	DRIVE SHAFT		
12	1	0KQ499	BIL00007	EXTERNAL SEEGER D25mm		X
13	1	0DF285	CIL00138	BOWL DRIVE PINION		X
14	1	0DF286	CIL00142	SPIRAL ASSEMBLY		
15	1	0DF244	CIL00115	MICROSWITCH BRACKET		
16	1	0DF203	CIL00113	MICROSWITCH D3V-166-1C5	X	
17	1	0DF204	CIL00123	CHAIN TENSIONER ASSEMBLY		
18	1	0DF287	CIL00070	LID SHAFT		
19	1	0DF206	CIL00038	MICROSWITCH HUB		
20	2	0DF801	CIL00127	NYLON LID WASHER		
21	1	0DF288	CIL00234	LID		
22	4	0DF209	CIL00104	PLASTIC STOP SPACER 10 x 15		
23	1	0DF247	CIL00112	TEMPOMATIC TIMER M1 130 M10 SM-T		
24	1	0DF248	MANOP005	NON-GRAD. BLACK KNOB		
25	1	0DF824	CIL00161	BUTTON 0-1		
26	1	0DF250	CIL000116	SPEED SELECTOR		
27	1	0DF251	CIL00144	SCREEN-PRINTED ADHESIVE LABEL		
28	2	0DF211	CIL00106	WHEEL WITH BRAKE D50 M12		
29	2	0DF212	CIL00107	UNBRAKED WHEEL D50 M12		
30	1	0DF213	CIL00119	PLASTIC CABLE GLAND M20 x 1.5		
31	1	0DF851	CIL00211	UPPER PANEL		
32	1	0DF852	CIL00212	REAR PANEL		
33	1	0DF853	CIL00213	SIDE PANEL		
34	1	0DF292	CIL00043	DOUGH REMOVER PIN		
35	1	0DF293	CIL00102	BOWL CHAIN 3/8" 153P		X
36	1	0DF318	CIL00096	SPIRAL CHAIN ½" 69P		
37	1	0DF295	CIL00267	LID COVER		X
38	1	0DF376	CIL00274 + CIL00272	FUSE HOLDER + FUSE		
38	1	0DF820	CIL00272	FUSE	X	
62	1	0DF854	CIL00323	HEAD STRUCTURE		
63	1	0DF829	CIL00221	BOWL SUPPORT FLANGE		
64	1	0DF855	CIL00214	BOWL LOCKING DISC		
65	1	0DF831	CIL00222	RING, 3mm, BOWL-HOLDER DISC		

66	1	0DF832	CIL00219	HARDENED JOINT		
67	1	0DF833	CIL00218	DRIVE SUPPORT SHAFT WITH PIN		
68	1	0DF834	CIL00220	DRIVE SUPPORT SHAFT SUPPORT		
69	1	0DF265	CIL00133	GALVANISED PIN D12 x 128mm FOR B0WL ROLLER		
70	1	0DF835	CIL00229	GAS PISTON		X
71	1	0DF856	CIL00326	HEAD FIXING BLOCK		
72	1	0DF837	CIL00230	HEAD LOCK LEVER HANDLE		
74	1	0DF838	CIL00252	PROXIMITY ASSEMBLY	X	
84	1	0DF316	CIL00240	THREE PHASE ELECTRICAL SYSTEM BOX	X	

LR42 BOWL ASSEMBLY

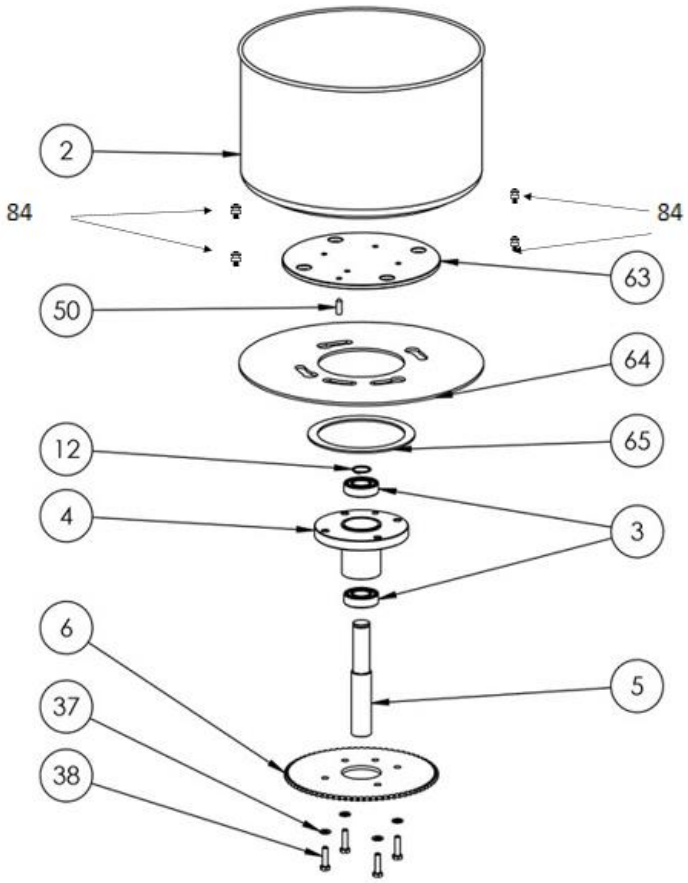

Pos.	Qty.	Code	Item	Description	V	W&T
2	1	0DF279	CIL00024	BOWL LR42		
3	2	0KQ394	CIL00093	BEARING 6205 2RS		X
4	1	0DF233	CIL00075	SHARED BOWL SUPPORT		
5	1	0DF234	CIL00067	BOWL SUPPORT SHAFT		
6	1	0DF235	CIL00081	BOWL CROWN		X
12	1	0KQ499	BIL00007	EXTERNAL SEEGER		
37	4	0KQ524	BIL00035	FLAT WASHER 8 ZN		
38	4	0D2329	BIL00034	HEX HEAD SCREW M8 x 30 ZN		
50	1	0DF073	BIL00021	M8 x 25 RAW POINTED SCREW		
63	1	0DF829	CIL00221	BOWL SUPPORT FLANGE		
64	1	0DF855	CIL00214	LOCKING DISC		
65	1	0DF831	CIL00222	DISK RING		
84	4	0DF839	CIL00262	SCREW FOR FIXING BOWL		

LR42 SPIRAL ASSEMBLY

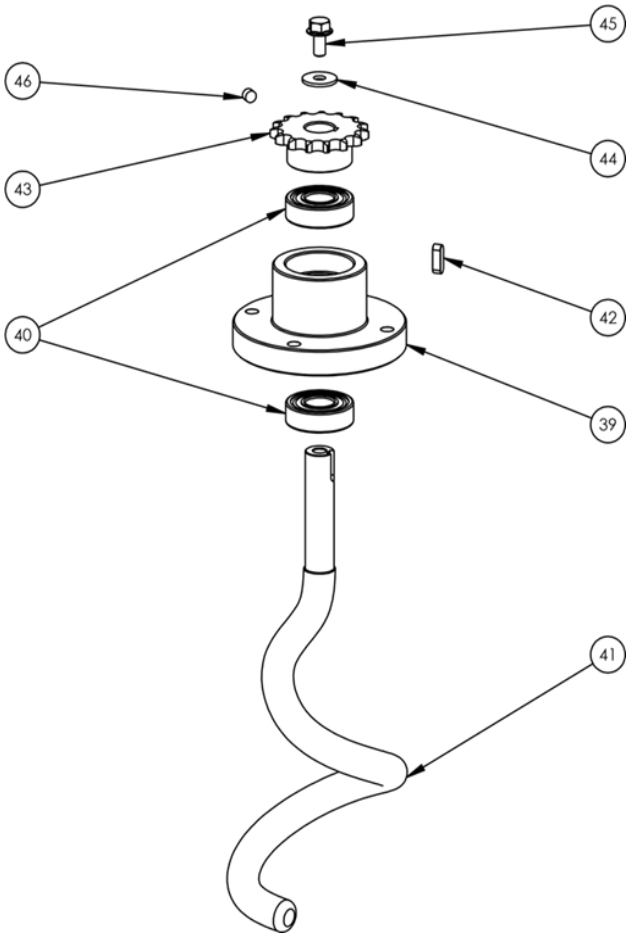

Pos.	Qty.	Code	Item	Description	V	W&T
39	1	0DF296	CIL00073	SPIRAL SUPPORT		
40	2	0KQ395	CIL00092	BEARING 6204 2RS		X
41	1	0DF297	CIL00030	SPIRAL LR42		
42	1	0KQ486	BIL00005	INTERLOCKING TAB 6x20		
43	1	0DF298	CIL00084	SPIRAL PINION		X
44	1	0D0630	BIL00036	FLAT WASHER 8 X 24 ZN		
45	1	0D0498	BIL00030	HEX HEAD SCREW M8 x 16 ZN		
46	1	0D0559	BIL00020	M8 x 8 POINT GRUB SCREW UNPROCESSED		

LR42 DRIVE SHAFT ASSEMBLY

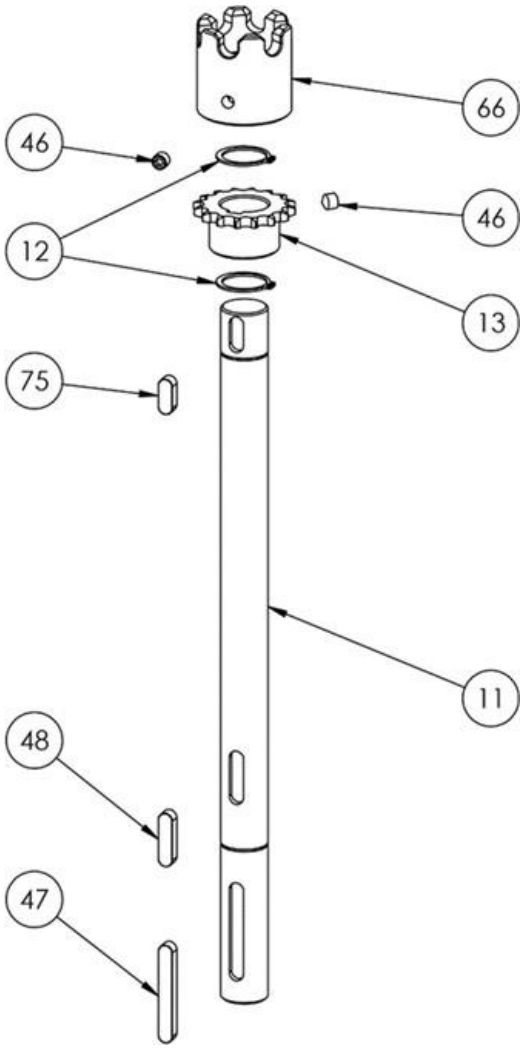

Pos.	Qty.	Code	Item	Description	V	W&T
11	1	0DF850	CIL00217	DRIVE SHAFT		
12	2	0KQ499	BIL00007	EXTERNAL SEEGER		
13	1	0DF285	CIL00138	BOWL DRIVE PINION		
46	2	0D0559	BIL00020	M8 x 8 POINT GRUB SCREW		
47	1	0D6380	BIL00001	INTERLOCKING TAB 8 x 55		
48	1	0KQ487	BIL00002	INTERLOCKING TAB 8 x 30		
66	1	0DF832	CIL00219	HARDENED JOINT D50 x 50		
75	1	0D2334	BIL00047	INTERLOCKING TAB 8 x 20		

TOP DRIVE SHAFT ASSEMBLY

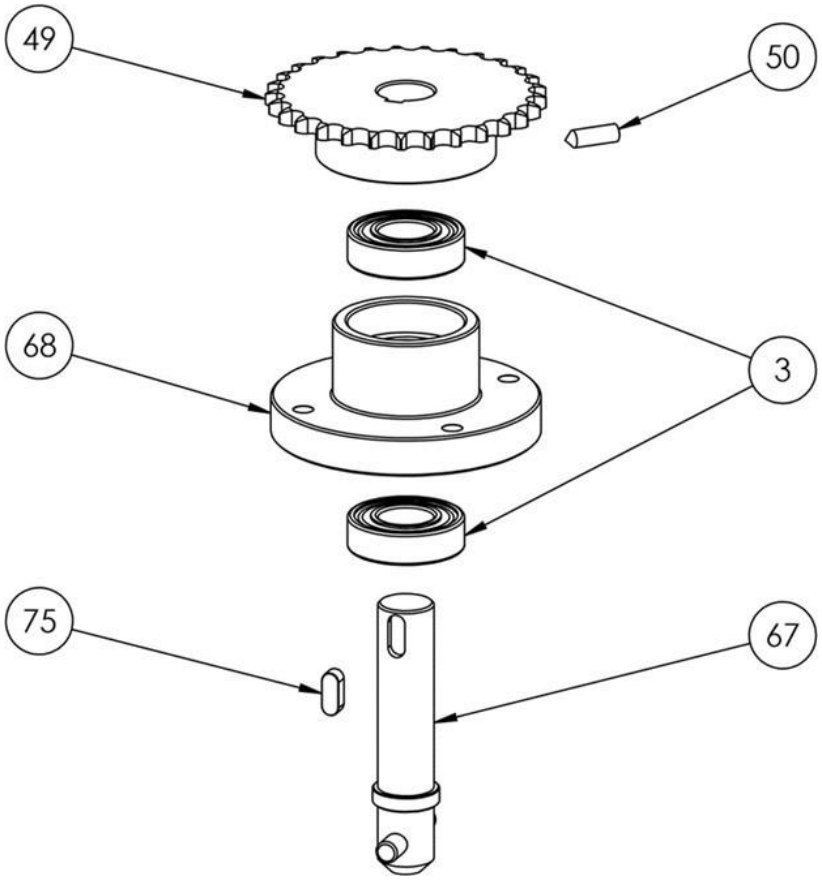

Pos.	Qty.	Code	Item	Description	V	W&T
3	2	0KQ394	CIL00093	BEARING 6205 2RS		X
49	1	0DF263	CIL00137	SPIRAL DRIVE PINION L10 Z25 3/8" D20		
50	1	0DF073	BIL00021	M8 x 25 POINT GRUB SCREW UNPROCESSED		
67	1	0DF833	CIL00218	DRIVE SUPPORT SHAFT WITH PIN		
75	1	0D2334	BIL00047	INTERLOCKING TAB 8 x 20		
68	1	0DF834	CIL00220	DRIVE SUPPORT SHAFT SUPPORT		

LR42 LID ASSEMBLY

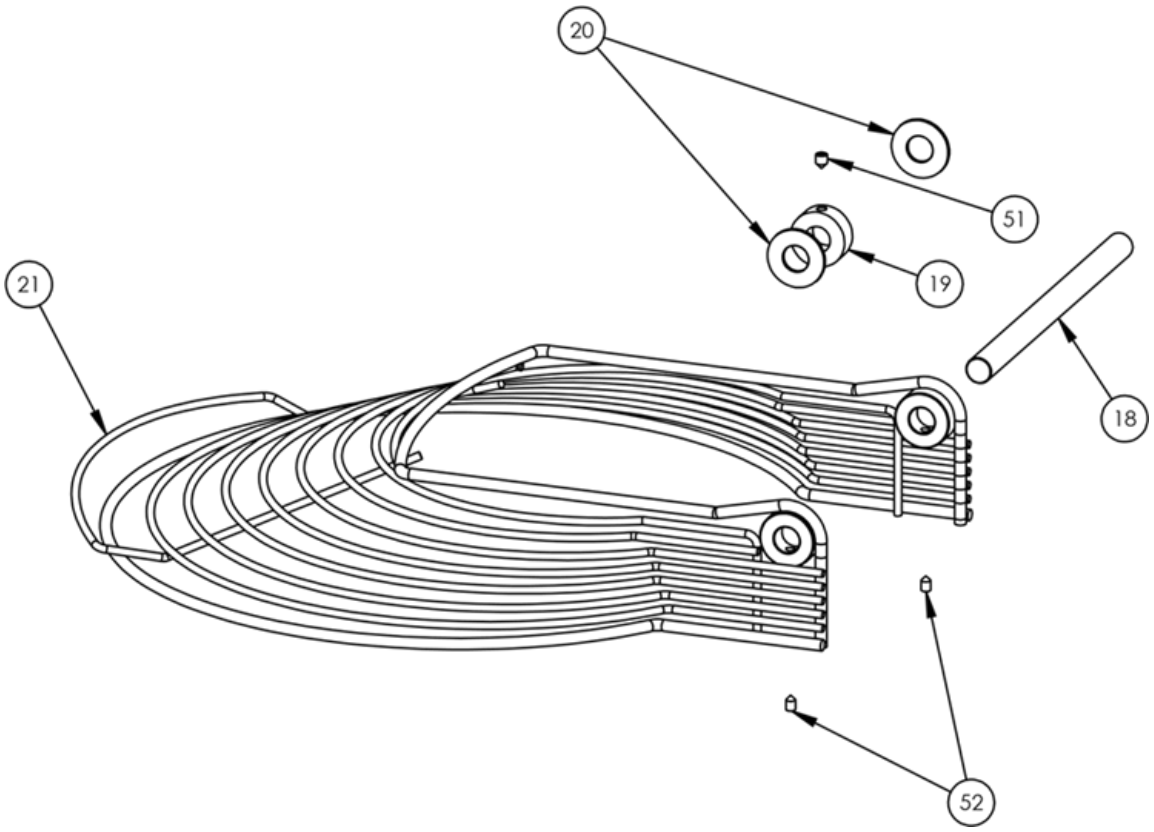

Pos.	Qty.	Code	Item	Description	V	W&T
18	1	0DF287	CIL00070	LID SHAFT		
19	1	0DF206	CIL00038	MICROSWITCH HUB		
20	2	0DF801	CIL00127	NYLON WASHER		
21	1	0DF288	CIL00234	LID LR42		
51	1	0D2320	BIL00019	POINT GRUB SCREW M6 x 8 ZN		
52	2	0D2109	BIL00018	POINT GRUB SCREW M5 x 8 ZN		

MICROSWITCH ASSEMBLY

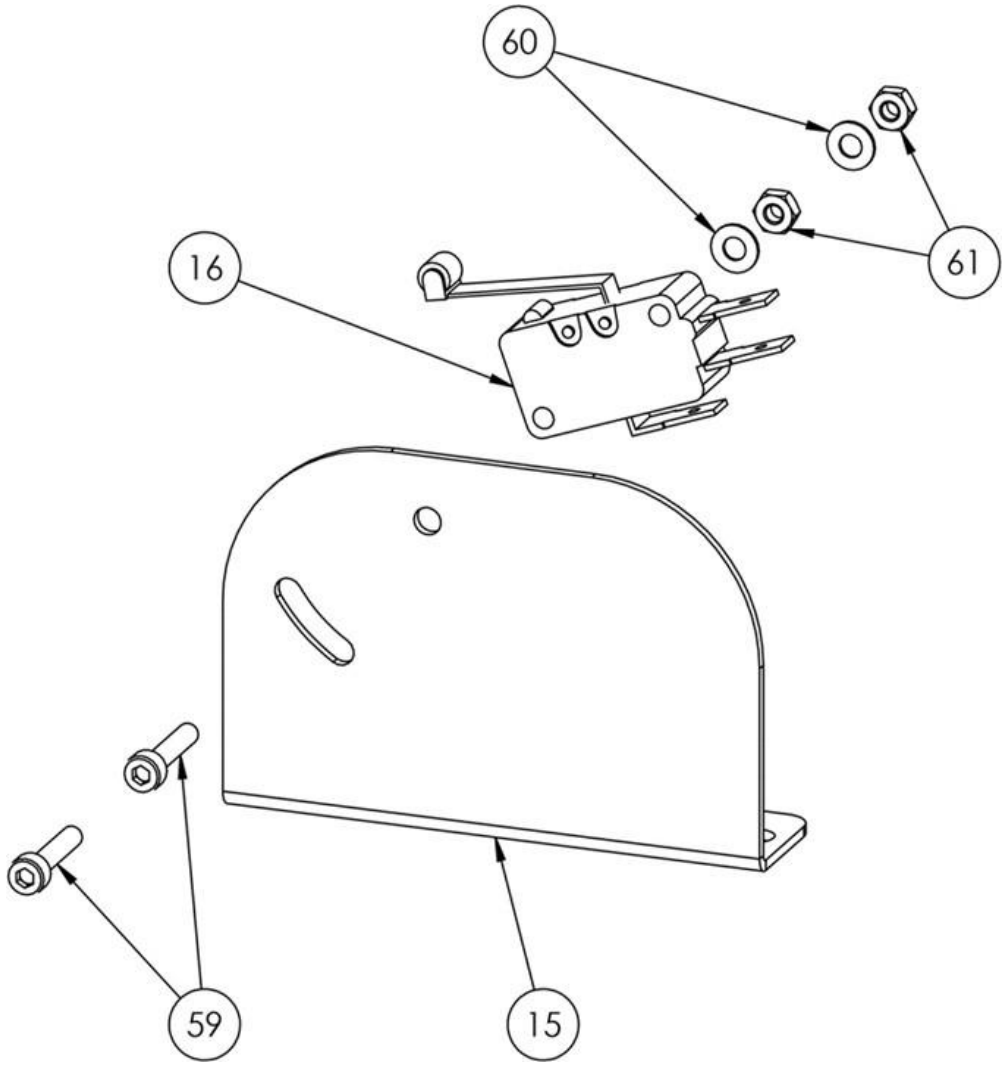

Pos.	Qty.	Code	Item	Description	V	W&T
15	1	0DF840	CIL00506	LID MICROSWITCH BRACKET		
16	1	0DF203	CIL00113	MICROSWITCH D3V	X	
59	2	0KQ511	BIL00015	SOCKET HEAD SCREW		
60	2	0D5620	BIL00043	FLAT WASHER 3 x 7 x 0.5		
61	2	033987	BIL00016	NUT M3 A2		

LR42 BOWL GUIDE ASSEMBLY

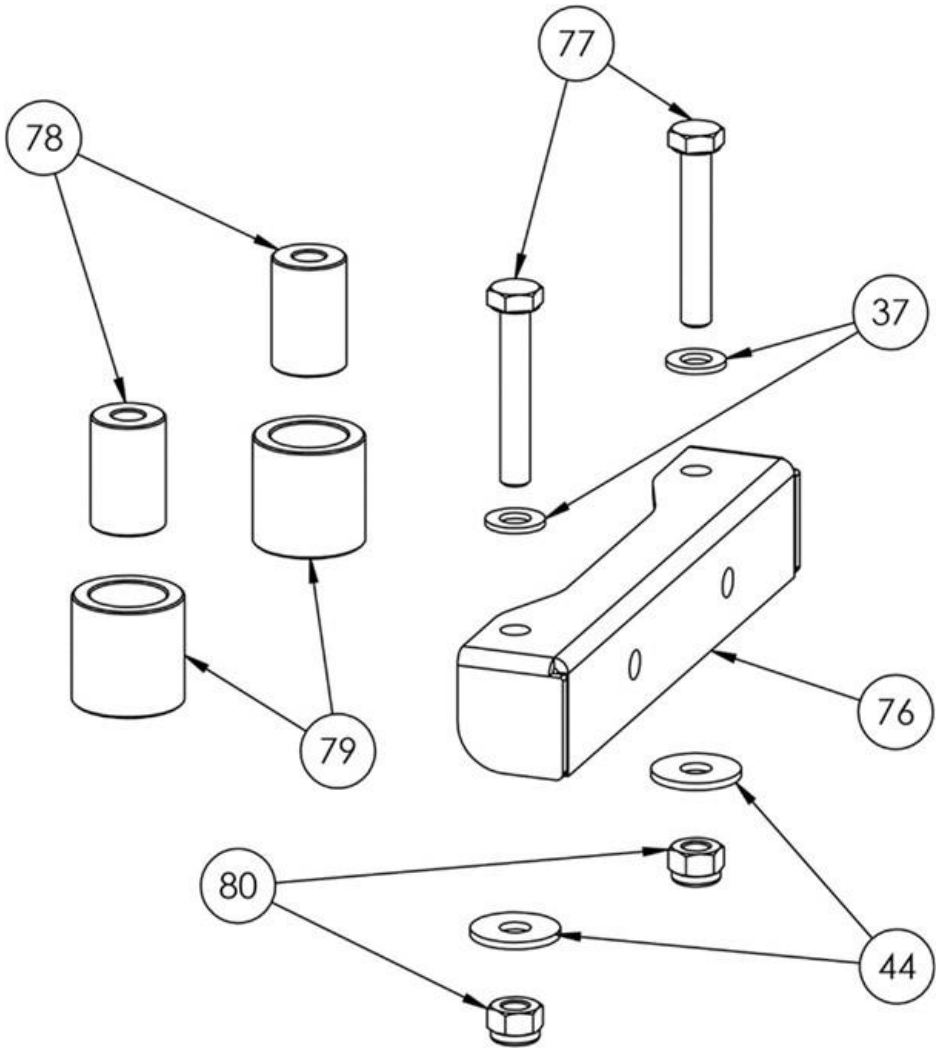

Pos.	Qty.	Code	Item	Description	V	W&T
37	2	0KQ524	BIL00035	FLAT WASHER 8 ZN		
44	2	0D0630	BIL00036	FLAT WASHER 8 x 24 ZN		
76	1	0DF264	CIL00131	BOWL ROLLS SUPPORT		
77	2	0D3488	BIL00051	TE SCREW M8 x 50 ZN		
78	2	0DF265	CIL00133	GV ROLLER BUSH D20 x 31		
79	2	0DF266	CIL00132	BOWL GUIDE ROLLERD		
80	2	0D0641	BIL00050	SELF BLOCKING NUT M8 ZN		

Machine motor combination board

MOTOR	CODE	L10	L22	L33	L42	L53	L62	LR22	LR33	LR42
Motor 0.37 kW; 230V. M	CIL00045	V	-	-	-	-	-	-	-	-
Motor 0.75 kW; 230V. M	CIL00046	-	-	-	-	-	-	-	-	-
Motor 0.75 kW; 230 - 400V. T	CIL00047	-	-	-	-	-	-	-	-	-
Two-speed motor 0.75 ÷ 1.1 kW – 400V. T	CIL00048	-	V	V	-	-	-	V	V	-
Motor 1.1 kW; 230V. M	CIL00049	-	-	-	-	-	-	-	-	-
Motor 1.1 kW; 230 - 400V. T	CIL00050	-	-	-	-	-	-	-	-	-
Motor 1.5 kW; 230V. M	CIL00135	-	-	-	-	-	-	-	-	-
Motor 1.5 kW; 230 - 400V. T	CIL00051	-	-	-	-	-	-	-	-	-
Motor 1.8 kW; 230V. M	CIL00052	-	-	-	-	-	-	-	-	-
Motor 1.8 kW; 230 - 400V. T	CIL00053	-	-	-	-	-	-	-	-	-
Two-speed motor 1.5 ÷ 2.2 kW – 400V. T	CIL00054	-	-	-	V	V	V	-	-	V

CE

Electrolux Professionnel SAS
Z.I. du Mont - 23200 AUBUSSON - FRANCE
www.electroluxprofessional.com