SPARE PART CATALOGUE
PIÈCES DÉTACHÉES

AUTOMATIC COFFEE APPLIANCE
MACHINE A CAFÉ AUTOMATIQUE

TANGO XP RANGE

PNCs List:

PNC	MODEL	REF	DESCRIPTION	NOTE
604503	TXD220HE1GES001	a	TANGO XP DUO 220 MAT GREY	380-415V 3N 50/60Hz
604504	TXD22PHE1GES001	b	TANGO XP DUO 22P MAT GREY PUMP MILK SYSTEM	380-415V 3N 50/60Hz
604505	TXD230HE1GES001	c	TANGO XP DUO 230 MAT GREY	380-415V 3N 50/60Hz
604506	TXD23PHE1GES001	d	TANGO XP DUO 23P MAT GREY PUMP MILK SYSTEM	380-415V 3N 50/60Hz
604502	TXD120HE1GES001	e	TANGO XP SOLO 120 MAT GREY	380-415V 3N 50/60Hz
604517	TXD12PHE1GES001	f	TANGO XP SOLO 12P MAT GREY PUMP MILK SYSTEM	380-415V 3N 50/60Hz
604518	TXD220SE8GNS014	g	TANGO XP DUO 220 MAT GREY STEAMAIR	208-240V 1N 60Hz - UL/NSF
604519	TXD22PSE8GNS014	h	TANGO XP DUO 22P MAT GREY STEAMAIR PUMP MILK SYSTEM	208-240V 1N 60Hz - UL/NSF
602700	TXD13PHE1GES001	i	TANGO XP SOLO 13P MAT GREY PUMP MILK SYSTEM	380-415V 3N 50/60Hz
602605	TXD220SE1GES001	j	TANGO XP DUO 220 MAT GREY STEAMAIR	380-415V 3N 50/60Hz
602606	TXD230SE1GES001	k	TANGO XP DUO 230 MAT GREY STEAMAIR	380-415V 3N 50/60Hz
604009	TXD230SE8GNS014	l	TANGO XP DUO 230 MAT GREY STEAMAIR	208-240V 1N 60Hz - UL/NSF
604010	TXD23PSE8GNS014	m	TANGO XP DUO 23P MAT GREY STEAMAIR PUMP MILK SYSTEM	208-240V 1N 60Hz - UL/NSF
604011	TXD120SE8GNS014	n	TANGO XP SOLO 120 MAT GREY STEAMAIR	208-240V 1N 60Hz - UL/NSF
604012	TXD12PSE8GNS014	o	TANGO XP SOLO 12P MAT GREY STEAMAIR PUMP MILK SYSTEM	208-240V 1N 60Hz - UL/NSF
604013	TXD130SE8GNS014	p	TANGO XP SOLO 130 MAT GREY STEAMAIR	208-240V 1N 60Hz - UL/NSF
604014	TXD13PSE8GNS014	q	TANGO XP SOLO 13P MAT GREY STEAMAIR PUMP MILK SYSTEM	208-240V 1N 60Hz - UL/NSF
602175	TXD120HE1GES035	r	TANGO XP SOLO 120 MAT GREY	380-415V 3N 50/60Hz
602176	TXD120SE1GES035	s	TANGO XP SOLO 120 MAT GREY STEAMAIR	380-415V 3N 50/60Hz
602690	TXD12PHE1GES035	t	TANGO XP SOLO 12P MAT GREY PUMP MILK SYSTEM	380-415V 3N 50/60Hz
602599	TXD130HE1GES035	u	TANGO XP SOLO 130 MAT GREY	380-415V 3N 50/60Hz
602600	TXD130SE1GES035	v	TANGO XP SOLO 130 MAT GREY STEAMAIR	380-415V 3N 50/60Hz
602720	TXD13PHE1GES035	w	TANGO XP SOLO 13P MAT GREY PUMP MILK SYSTEM	380-415V 3N 50/60Hz
602721	TXD220HE1GES035	x	TANGO XP DUO 220 MAT GREY	380-415V 3N 50/60Hz
604015	TXD220SE1GES035	y	TANGO XP DUO 220 MAT GREY STEAMAIR	380-415V 3N 50/60Hz
604018	TXD22PHE1GES035	z	TANGO XP DUO 22P MAT GREY PUMP MILK SYSTEM	380-415V 3N 50/60Hz
604016	TXD230HE1GES035	a1	TANGO XP DUO 230 MAT GREY	380-415V 3N 50/60Hz
604017	TXD230SE1GES035	b1	TANGO XP DUO 230 MAT GREY STEAMAIR	380-415V 3N 50/60Hz
604019	TXD23PHE1GES035	c1	TANGO XP DUO 23P MAT GREY PUMP MILK SYSTEM	380-415V 3N 50/60Hz
602296	TXD22PSE1GES001	d1	TANGO XP DUO 22P SA TEFLON TRI CE/CB GREY	220-240/380-415V 3N/1N 50/60Hz
602593	TXD130HE1GES001	e1	TANGO XP SOLO 130 TEFLON TRI CE GREY	200-240/380-415V 3N/1N 50/60Hz
602596	TXD130SE1GES001	f1	TANGO XP SOLO 130 SA TRI CE GREY	200-240/380-415V 3N/1N 50/60Hz
602607	TXD120SE1GES001	g1	TANGO XP SOLO 120 SA TRI CE GREY	200-240/380-415V 3N/1N 50/60Hz

1XX	Page	HABILLAGE	*MACHINE CASING*
160	4	VUE D'ENSEMBLE	*OVERVIEW*
170	6	COTES MACHINE	*COMPLETE SIDES PANEL*
171	8	ENSEMBLE BASSINE, JOUES	*SET OVERFLOW TRAY AND SIDES PARTS*
172	10	ENSEMBLE BAC A MARC	*SET WASTE DRAWER*
175	12	CALANDRE, ENSEMBLE PLASTIQUE	*PLASTIC FRONT PANEL SET*
176	14	CALANDRE, ENSEMBLE SUPPORT	*FRONT PANEL, SUPPORT SET*
180	16	CHAUFFE TASSES	*CUPS WARMER*
186	18	TRÉMIES TANGO XP	*HOPPER UNIT*
2XX		**SORTIES EXTÉRIEURES**	***EXTERNAL OUPUT***
202	20	SORTIE EV VAPEUR TANGO XP	*EV STEAM OUTLET TANGO XP*
222	22	SORTIE VAPEUR STD	*STD STEAM OUTLET*
243	24	SORTIE STEAMAIR ITALCOPPIE	*STEAMAIR OUTLET*
252	26	SORTIE EV EAU CHAUDE	*HOT WATER OUTLET*
260	28	SORTIE EAU CHAUDE	*HOT WATER OULTET*
3XX		**HYDRAULIQUE**	***HYDRAULIC CIRCUIT***
311	30	ENSEMBLE ENTRÉE D'EAU	*WATER INLET SET*
320	32	POMPES 100L-200L	*100L-200L MOTORS PUMPS*
336	34	NOURRICE ALIMENTATION	*WATER FEEDING UNIT*
337	36	SOUS-ENSEMBLES HYDRAULIQUES 1GR	*SUB-ASSEMBLIES HYDRAULIC*
342	38	VUE D'ENSEMBLE CHAUDIÈRES TANGO XP	*OVERVIEW TANGO XP BOILERS*
348	40	CHAUDIÈRE CAFÉ	*COFFEE BOILER*
353	42	CHAUDIÈRE VAPEUR	*STEAM BOILER*
358	44	MODULE EV 2GR	*ELECTROVALVE MODULE 2GR*
365	46	BLOC PASTILLES	*PELLET PART SET*
366	48	ENSEMBLE BLOC VIDANGE	*CLEANING DRAIN SET*
371	50	GOULOTTE D'ÉVACUATION	*DRAIN CHUTE*
375	52	SUPPORT TUBES 2GR	*2 UNITS PIPE HOLDER*
4XX		**CIRCUIT CAFÉ**	***COFFEE SYSTEM***
402	54	MOULIN 84MM	*COFFEE GRINDER*
410	56	ENTONNOIR	*FUNNEL*
417	58	ENSEMBLE BALANCIER	*CLEANING DEVICE*
422	60	MONOGROUPE CAFÉ	*MONOGROUP*
423	62	GROUPE CAFÉ SANS PISTON (2P) NA	*COFFEE UNIT WITHOUT PISTON (2P)*
425	64	PISTON COMPLET	*PISTON DEVICE*
426	66	PISTON COMPLET NEXT GEN	*PISTON DEVICE*
432	68	MOTEUR 37382 PLATEAU NA	*TURNTABLE MOTOR*
440	70	BEC CAFÉ	*COFFEE SPOUT*
5XX		**ÉLECTRONIQUE**	***ELECTRONIC SYSTEM***
502	72	FUSIBLES CARTE MÈRE	*FUSES CONNECTORS*
520	74	BOÎTIER ÉLECTRONIQUE	*ELECTRONIC BOX*
551	76	CÂBLES ÉLECTRIQUES	*ELECTRIC WIRING*
6XX		**OPTION/KIT**	***OPTION/KIT***
642	78	OPTION POMPE LAIT «BLOC POMPE LAIT»	*«MILK PUMP BLOCK» MILK PUMP KIT*
645	80	OPTION POMPE LAIT «BLOC LAIT XP»	*«MILK BLOCK» MILK PUMP KIT*
646	82	CARROSSERIE MODULE FRIGO FG16 XP	*ABODY OF FG16 FRIDGE MODULE*
692	84	KITS TECHNICIEN XP	*TECHNICIAN TOOLS KIT*

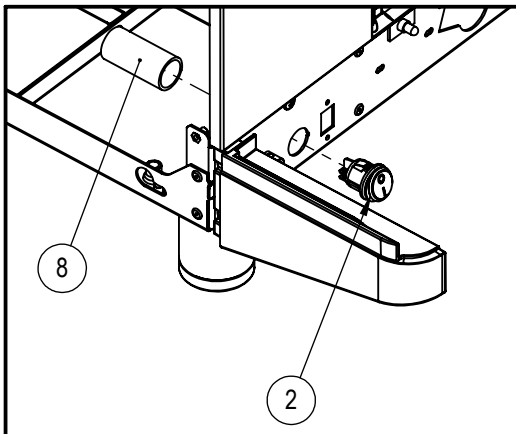

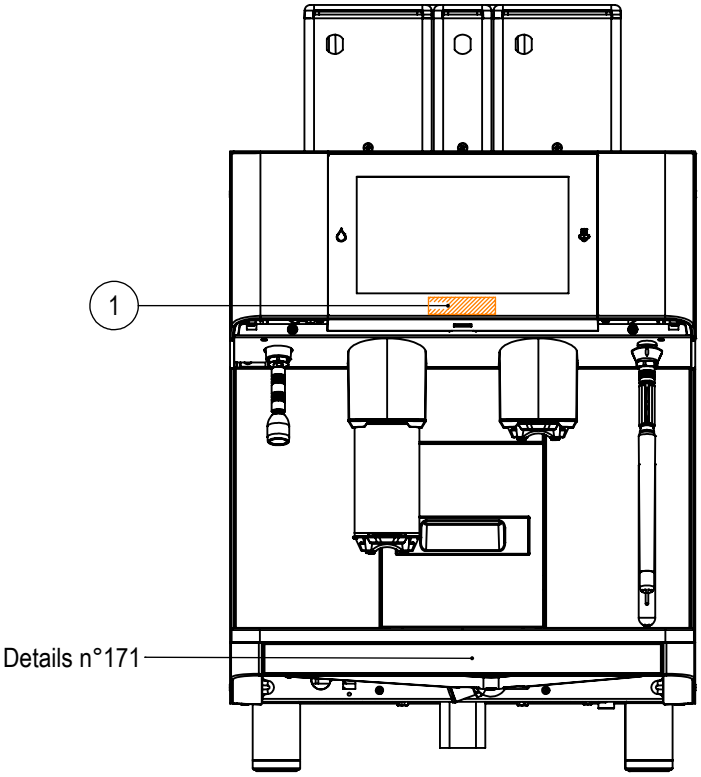

Exemple avec une TANGO 230 DUO
Example with a TANGO 230 DUO

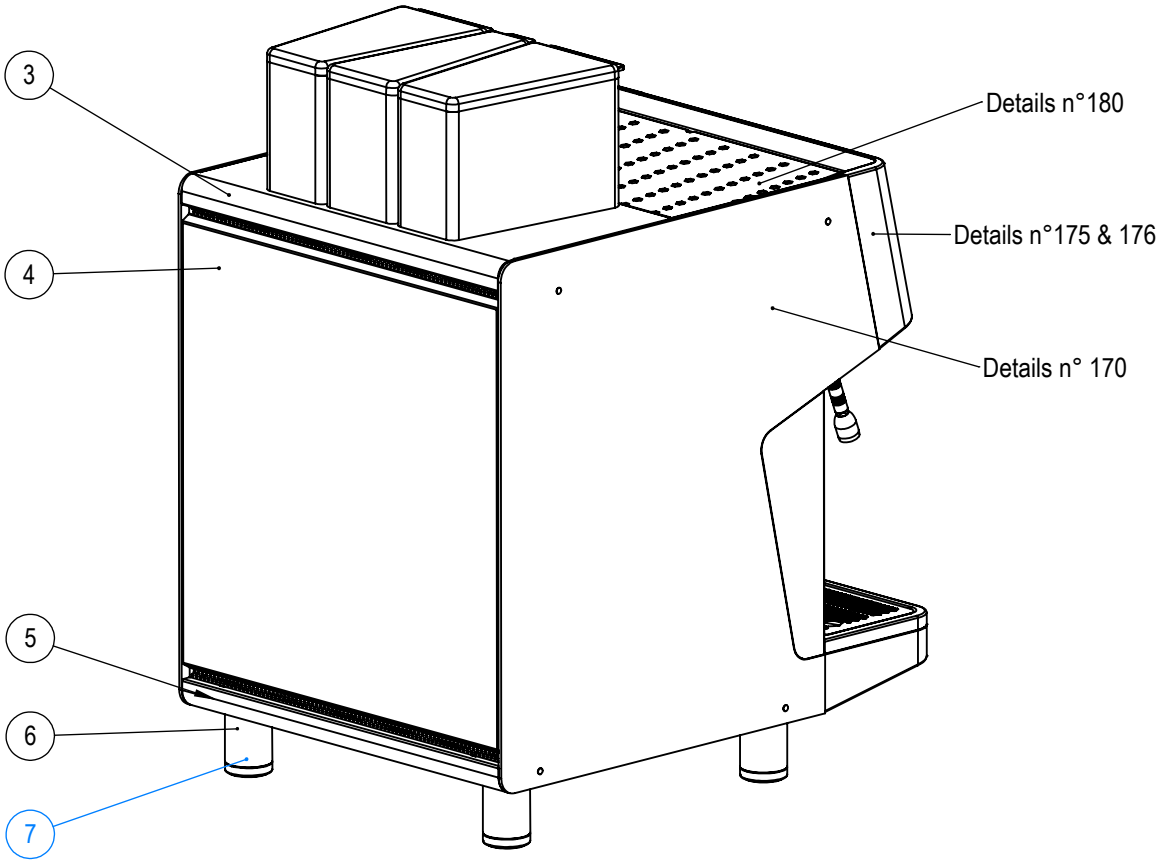

08/24	VUE D'ENSEMBLE *OVERVIEW*	160

PLANCHE - PLATE 160

Pos.	Fact. code	Code	Description FR	*Description GB*	V	W&T	REF.	NOTES	S/N BREAK
1	46310		STICKER TANGO XP 7MM METALFLEX	*STICKER TANGO XP 7MM METALFLEX*					
2	43415	0UNDC7	INTERRUPTEUR BIPOLAIRE A BASCULE	*BIPOLAR SWITCH*					
2	43416	0UNJI9	CAPOT POUR INTERRUPTEUR ROND	*PLASTIC COVER SWITCH*					
3	NA3025	0UNJRZ	CASQUETTE 2 TREMIES 1GR	*2 HOPPERS TOP PLATE 1GR*			e;f;n;o;r;s;t;g1		
3	NA3026	0UNJO8	CASQUETTE 3 TREMIES 1GR				i;p;q;u;v;w;e1;f1		
3	NA3027	0UNJPX	CASQUETTE 2 TREMIES 2GR	*2 HOPPERS TOP PLATE 2GR*			a;b;g;h;j;x;y;z;d1		
3	NA3028	0UNJO7	CASQUETTE 3 TREMIES 2GR	*3 HOPPERS TOP PLATE 2GR*			c;d;k;l;m;a1;b1;c1		
4	NA3023	0UNJNJ	CHEMISE ARRIERE 1GR	*1GR REAR CASING*			e;f;i;n;o;p;q;r;s;t;u;v;w;e1;f1;g1		
4	NA3024	0UNJNM	CHEMISE ARRIERE 2GR	*2GR REAR CASING*			a;b;c;d;g;h;j;k;l;m;x;y;z;a1;b1;c1;d1		
5	NA3020	0UNJM0	BAGUETTE ARRIERE 1GR	*1GR REAR TRIM*			e;f;i;n;o;p;q;r;s;t;u;v;w;e1;f1;g1		
5	NA3021	0UNJM2	BAGUETTE ARRIERE 2GR	*2GR REAR TRIM*			a;b;c;d;g;h;j;k;l;m;x;y;z;a1;b1;c1;d1		
6	54000	0UNDM3	PIED REGLABLE 71/79 VIS M8X15	*ADJUSTABLE FOOT*					
7	54004	871041	KIT PIED REGLABLE 71/79 VIS M8X15	*KIT ADJUSTABLE FOOT*					
8	12724	0UN358	TUBE SILICONE D20	*SILICONE PIPE*					

Note : No code → unavailable for spare parts

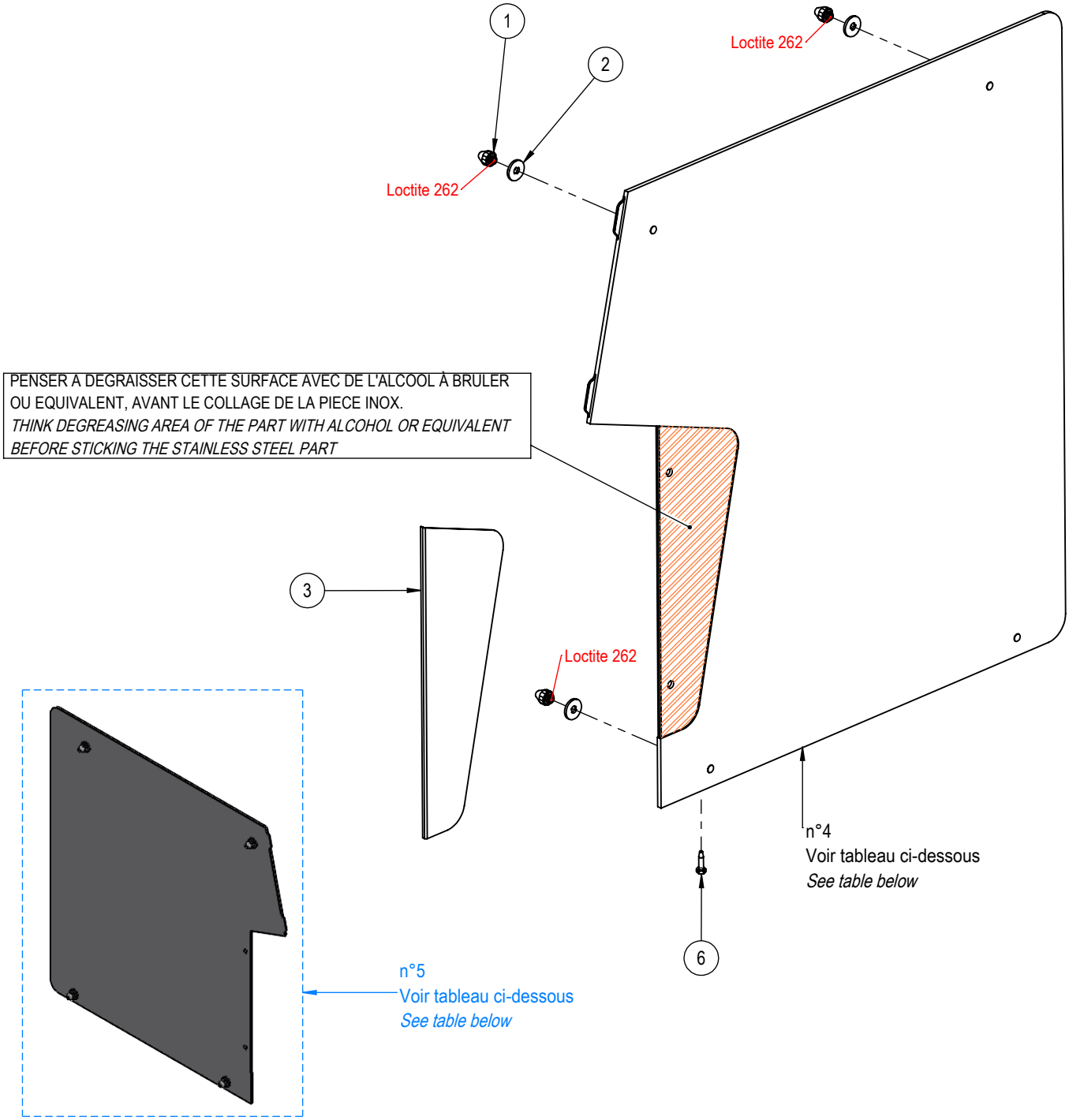

	N°4	N°5
Couleur / Color	Ref pièce / part	Ref ss-ensemble / sub-assembly
	Gauche (left) / Droit (right)	Gauche (left) / Droit (right)
BRUT / RAW	NA3009 / NA3010	
NOIR MAT / FROSTED BLACK	NA3043 / NA3044	NA1008 / NA1009
GRIS MAT / FROSTED GREY	NA3045 / NA3046	NA1033 / NA1034
BLANC BRILLIANT / GLOSS WHITE	NA3047 / NA3048	NA1035 / NA1036
OR NACRE / PEARLY GOLD	NA3049 / NA3050	NA1047 / NA1048

03/24	COTES MACHINE *COMPLETE SIDES PANEL*	170

PLANCHE - PLATE 170

Pos.	Fact. code	Code	Description FR	*Description GB*	V	W&T	REF.	NOTES	S/N BREAK
1	NA4010	0UNJPG	BAGUE COTE N.A.	*NUT SIDE PANEL N.A.*					
2	51650	0UN297	RONDELLE 6 6.4x18x2 NYLON	*WASHER DIAM. 6 NYLON*					
3	NA3011		ORNEMENT GAUCHE	*LEFT TRIM SIDE PANEL*					
3	NA3012		ORNEMENT DROIT	*RIGHT TRIM SIDE PANEL*					
4	NA3009		COTE GAUCHE	*LEFT SIDE PANEL*					
4	NA3010		COTE DROIT	*RIGHT SIDE PANEL*					
4	NA3043		COTE GAUCHE NOIR GIVRE	*LEFT SIDE PANEL FROSTED BLACK*					
4	NA3044		COTE DROIT NOIR GIVRE	*RIGHT SIDE PANEL FROSTED BLACK*					
4	NA3045	0UNJHB	COTE GAUCHE GRIS GIVRE	*LEFT SIDE PANEL FROSTED GREY*			a;b;c;d;e;f;g;h;i;j;k;l;m;n;o;p;q;r;s;t;u;v;w;x;y;z;a1;b1;c1;d1;e1;f1;g1		
4	NA3046	0UNJHC	COTE DROIT GRIS GIVRE	*RIGHT SIDE PANEL FROSTED GREY*			a;b;c;d;e;f;g;h;i;j;k;l;m;n;o;p;q;r;s;t;u;v;w;x;y;z;a1;b1;c1;d1;e1;f1;g1		
4	NA3047		COTE GAUCHE BLANC BRILLANT	*LEFT SIDE PANEL GLOSS WHITE*					
4	NA3048		COTE DROIT BLANC BRILLANT	*RIGHT SIDE PANEL GLOSS WHITE*					
4	NA3049		COTE GAUCHE OR NACRE MAT	*LEFT SIDE PANEL GOLD PEARLY*					
4	NA3050		COTE DROIT OR NACRE MAT	*RIGHT SIDE PANEL GOLD PEARLY*					
5	NA1008	0UNJBP	COTE GAUCHE COMPLET NOIR MAT	*COMPLETE L SIDE PANEL BLACK*					
5	NA1009	0UNJBS	COTE DROIT COMPLET NOIR MAT	*COMPLETE R SIDE PANEL BLACK*					
5	NA1033	0UNI63	COTE GAUCHE COMPLET GRIS GIVRE	*COMPLETE L SIDE PANEL GREY*			a;b;c;d;e;f;g;h;i;j;k;l;m;n;o;p;q;r;s;t;u;v;w;x;y;z;a1;b1;c1;d1;e1;f1;g1		
5	NA1034	0UNI64	COTE DROIT COMPLET GRIS GIVRE	*COMPLETE R SIDE PANEL GREY*			a;b;c;d;e;f;g;h;i;j;k;l;m;n;o;p;q;r;s;t;u;v;w;x;y;z;a1;b1;c1;d1;e1;f1;g1		
5	NA1035	0UNJBQ	COTE GAUCHE COMPLET BLANC BR.	*COMPLETE L SIDE PANEL WHITE*					
5	NA1036	0UNJBT	COTE DROIT COMPLET BLANC BR.	*COMPLETE R SIDE PANEL WHITE*					
5	NA1047	0UNJBR	COTE GAUCHE COMPLET OR NACRE	*COMPLETE L SIDE GOLD PEARLY*					
5	NA1048	0UNJBU	COTE DROIT COMPLET OR NACRE	*COMPLETE R SIDE GOLD PEARLY*					
6	NA4009	0UNI65	VIS M4 MAINTIEN COTE	*HOLDING SIDE SCREW*					

Note : No code → unavailable for spare parts

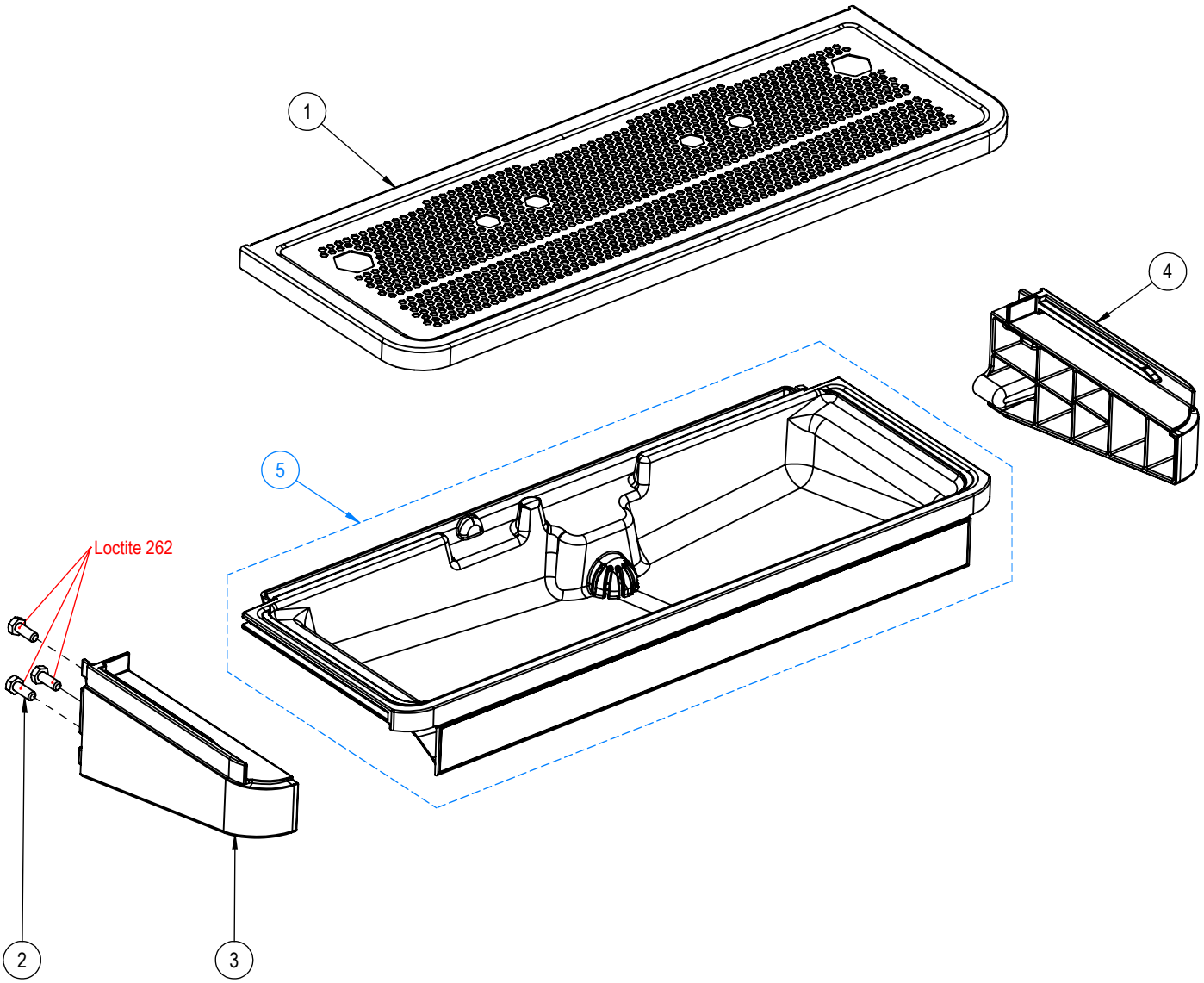

01/24	ENSEMBLE BASSINE, JOUES *SET OVERFLOW TRAY AND SIDES PARTS*	171

PLANCHE - PLATE 171

Pos.	Fact. code	Code	Description FR	*Description GB*	V	W&T	REF.	NOTES	S/N BREAK
1	NA3001	0UNJFD	GRILLE BASSINE 1GR	*1GR DRIP TRAY GRID*			e;f;i;n;o;p;q;r;s;t;u;v;w;e1;f1;g1		
1	NA3002	0UNI66	GRILLE BASSINE 2GR	*2GR DRIP TRAY GRID*			a;b;c;d;g;h;j;k;l;m;x;y;z;a1;b1;c1;d1		
2	SH28		VIS TH M6 X 16	*SCREW M6 X 16*					
3	NA7035	0UNJRV	JOUE BASSINE GAUCHE NOIR BR.	*DRIP TRAY HOLDER LEFT*					
4	NA7036	0UNJRW	JOUE BASSINE DROITE NOIR BR.	*DRIP TRAY HOLDER RIGHT*					
5	NA1004	0UNJDC	BASSINE 1GR ASSEMBLEE	*DRIP TRAY 1GR ASSEMBLED*			e;f;i;n;o;p;q;e1;f1;g1		
5	NA1005	0UNI5S	BASSINE 2GR ASSEMBLEE	*DRIP TRAY 2GR ASSEMBLED*			a;b;c;d;g;h;j;k;l;m;d1		
5	NA1088	0UNJNO	BASSINE 1GR ASSEMBLEE EPR	*DRIPTRAY 1GR ASSEMBLED EPR*			r;s;t;u;v;w		
5	NA1089	0UNJHS	BASSINE 2GR ASSEMBLEE EPR	*DRIPTRAY 2GR ASSEMBLED EPR*			x;y;z;a1;b1;c1		

Note : No code → unavailable for spare parts

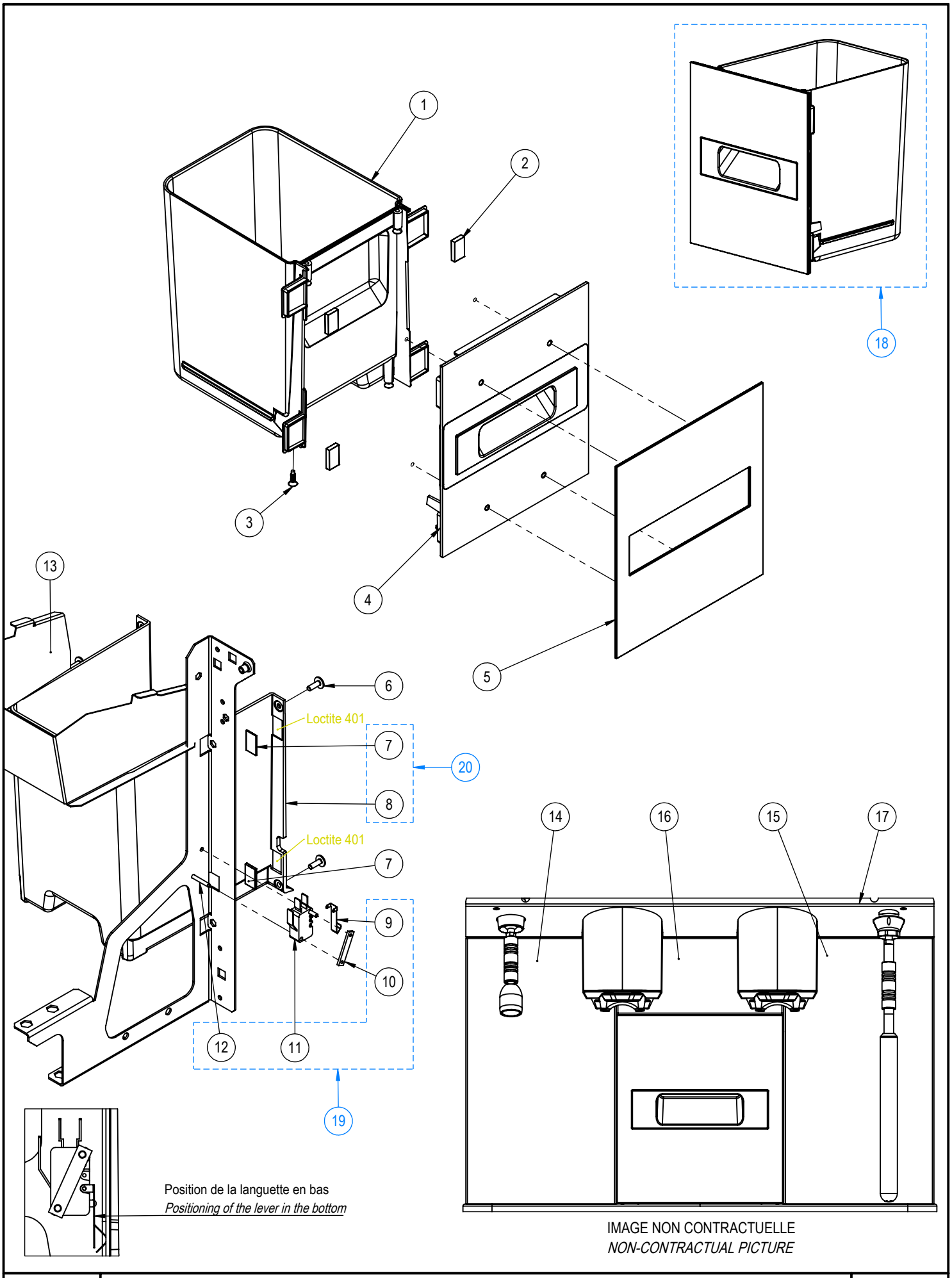

03/24	ENSEMBLE BAC À MARC *SET WASTE DRAWER*	172

PLANCHE - PLATE 172

Pos.	Fact. code	Code	Description FR	*Description GB*	V	W&T	REF.	NOTES	S/N BREAK
1	NA7022		CORPS BAC A MARC	*DRAWER BODY*					
2	NA4003		AIMANT B.A.M	*MAGNET DRAWER*					
3	50724		VIS PLASTIC TF N°6(3,5) X 13 INOX	*PLASTIC SCREW TF N°6(3,5) X 13*					
4	NA1049		FACE + POIGNEE BAM	*FRONT PANEL + DRAWER HANDLE*					
5	NA3006		FACE AVANT B.A.M	*FRONT FINITION DRAWER*					
6	50126	0UN615	VIS TB CRUCIFORME A EMBASE M4 x 12	*CRUCIFORM SCREW M4 x 12*				MOQ = 50	
7	NA4032		AIMANT CLOISON B.A.M 20x11,5x1	*MAGNET ENCLOSURE 20x11,5x1*					
8	NA7023	0UNJHE	CLOISONEMENT B.A.M	*DRAWER ENCLOSURE*					
9	43510	0UN081	LEVIER PLAT MICRORUPTEUR	*LEVER FOR MICROSWITCH*					
10	TG2085	0UNJC8	BARRETTE TARAUDEE	*THREADED CLIP*					
11	CN526	0UN021	MINIRUPTEUR SECU EAU MARRON	*WATER SAFETY MINI SWITCH*					
12	CN31	0UNA3Q	VIS TC M3 X 20 INOX	*SCREW M3 X 20*					
13	NA2020	0UNJHK	TOLE CLOISENNEMENT B.A.M.	*ENCLOSURE SHEET*			a;b;c;d;g;h;j;k;l;m;x;y;z;a1;b1;c1;d1		
14	NA3029	0UNI68	DEVANT 2GR GAUCHE	*LEFT FRONT PANEL 2GR*			a;b;c;d;g;h;j;k;l;m;x;y;z;a1;b1;c1;d1		
14	NA3032	0UNJPH	DEVANT 1GR GAUCHE	*LEFT FRONT PANEL 1GR*			e;f;i;n;o;p;q;r;s;t;u;v;w;e1;f1;g1		
15	NA3030	0UNI69	DEVANT 2GR DROIT	*RIGHT FRONT PANEL 2GR*			a;b;c;d;g;h;j;k;l;m;x;y;z;a1;b1;c1;d1		
15	NA3033	0UNJPI	DEVANT 1GR DROIT	*RIGHT FRONT PANEL 2GR*			e;f;i;n;o;p;q;r;s;t;u;v;w;e1;f1;g1		
16	NA3031	0UNI7A	DEVANT CENTRAL	*CENTRAL FRONT PANEL*			a;b;c;d;g;h;j;k;l;m;x;y;z;a1;b1;c1;d1		
17	NA3035	0UNJPJ	FINITION DESSOUS CALANDRE 1GR	*UNDER DISPLAY FINISH 1GR*			e;n;p;r;s;u;v;e1;f1;g1		
17	NA3036	0UNI7B	FINITION DESSOUS CALANDRE 2GR	*UNDER DISPLAY FINISH 2GR*			a;c;g;j;k;l;x;y;a1;b1		
17	NA3053	0UNJND	FINIT. DESSOUS CALANDRE 1 LAIT	*UNDER DISPLAY FINISH 1GR, MILK*			f;i;o;q;t;w		
17	NA3054	0UNJNE	FINIT. DESSOUS CALANDRE 2 LAIT	*UNDER DISPLAY FINISH 2GR, MILK*			b;d;h;m;z;c1;d1		
18	NA1006	0UNI67	BAC A MARC ASSEMBLE	*DRAWER ASSEMBLED*					
19	NA1059	0UNJE7	ENSEMBLE MINIRIPTEUR B.A.M.	*SET MINI SWITCH FOR DRAWER*					
20	NA1052	0UNJI2	ASM CLOISON B.A.M.	*SUB ASSEMBLY DOOR DRAWER*					

Note : No code → unavailable for spare parts

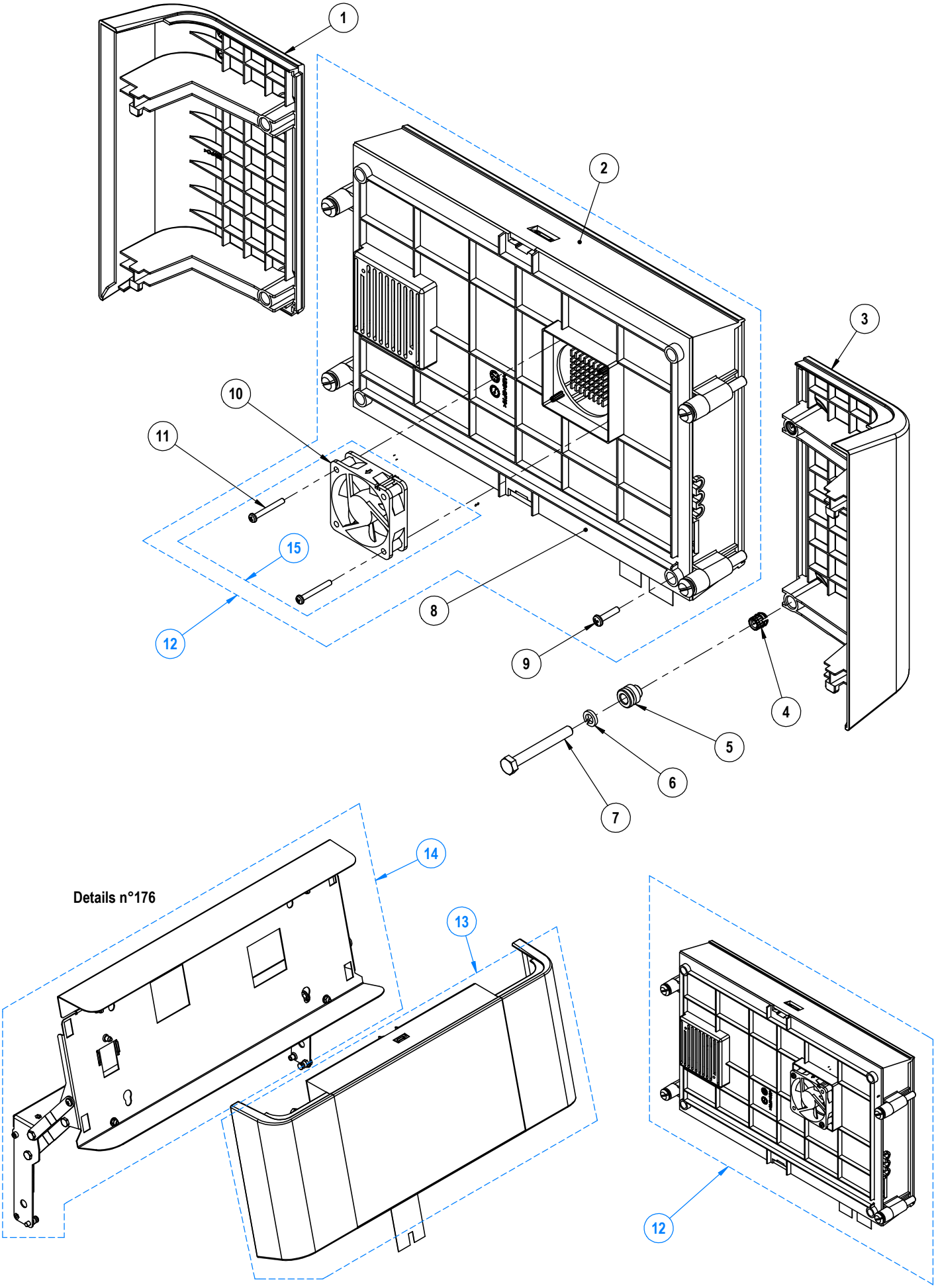

09/24	**CALANDRE, EMSEMBLE PLASTIQUE** *PLASTIC FRONT PANEL SET*	175

PLANCHE - PLATE 175

Pos.	Fact. code	Code	Description FR	*Description GB*	V	W&T	REF.	NOTES	S/N BREAK
1	NA7003	0UNJLM	OREILLE DROITE 1GR	*RIGHT TRIM 1 GROUP*			e;f;i;n;o;p;q;r;s;t;u;v;w;e1;f1;g1		
1	NA7005	0UNJLO	OREILLE DROITE 2GR	*RIGHT TRIM 2 GROUPS*			a;b;c;d;g;h;j;k;l;m;x;y;z;a1;b1;c1;d1		
2	NA7006		BOITIER ECRAN	*SCREEN BOX*					
3	NA7002	0UNJLL	OREILLE GAUCHE 1GR	*LEFT TRIM 1 GROUP*			e;f;i;n;o;p;q;r;s;t;u;v;w;e1;f1;g1		
3	NA7004	0UNJLN	OREILLE GAUCHE 2GR	*LEFT TRIM 2 GROUPS*			a;b;c;d;g;h;j;k;l;m;x;y;z;a1;b1;c1;d1		
4	51352	0UNDLI	INSERT M6	*INSERT M6*					
5	NA4011	0UNJLF	ENTRETOISE FIXATION BOITIER	*SPACER FIXING BOX*					
6	51655	0UNA5W	RONDELLE GROWER DE 6	*WASHER 6*					
7	50307	0UNDK7	VIS TH M6 X 50	*SCREW M6 X 50*					
8	NA7007		COUVERCLE BOITE ECRAN	*COVER SCREEN BOX*					
9	50727		VIS PLASTIC TB (3,5) X 16	*PLASTIC SCREW TB (3,5) X 16*					
10	44321	0UN354	VENTILATEUR CABLE AVEC CONNECTEUR	*FAN WITH WIRE*					
11	50726	0UNJRX	VIS PLASTIC TB (3) X 25	*PLASTIC SCREW TB (3) X 25*					
12	NA1000	0UNI5P	UI ASSEMBLE	*UI ASSEMBLED*					
13	NA1040	0UNJO5	CALANDRE PLASTIQUE 1GR	*PLASTIC FRONT PANEL 1GR*			e;f;i;n;o;p;q;r;s;t;u;v;w;e1;f1;g1		
13	NA1041	0UNJG9	CALANDRE PLASTIQUE 2GR	*PLASTIC FRONT PANEL 2GR*			a;b;c;d;g;h;j;k;l;m;x;y;z;a1;b1;c1;d1		
14	NA1061	0UNJRY	ASM SUPPORT CALANDRE 1GR	*SET FRONT PANEL HOLDER 1GR*			e;f;i;n;o;p;q;r;s;t;u;v;w;e1;f1;g1		
14	NA1062	0UNJPK	ASM SUPPORT CALANDRE 2GR	*SET FRONT PANEL HOLDER 2GR*			a;b;c;d;g;h;j;k;l;m;x;y;z;a1;b1;c1;d1		
15	NA1106	0UNJU1	KIT VENTILATEUR + VIS	*SCREWS + FAN KIT*					

Note : No code → unavailable for spare parts

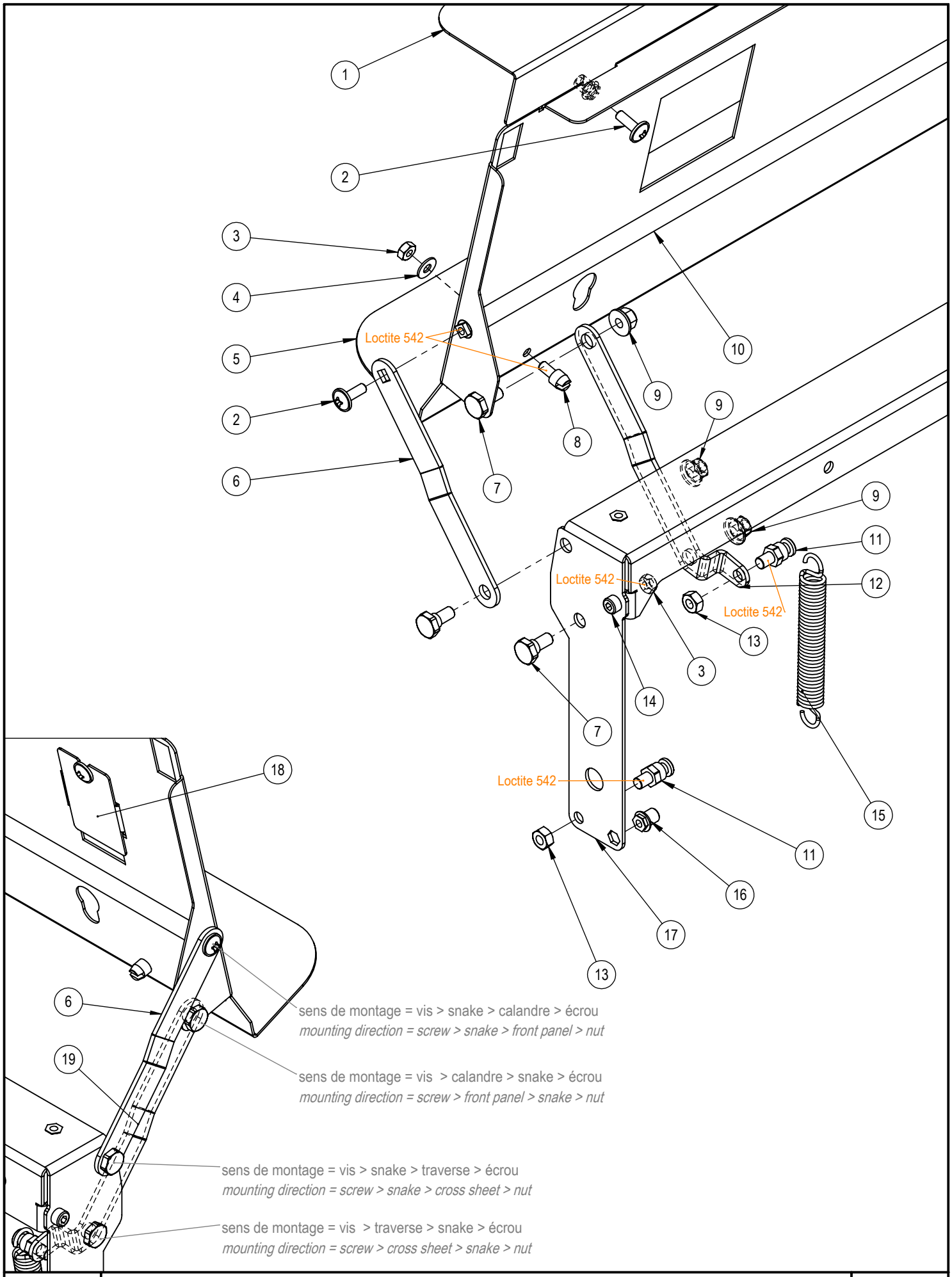

08/24	CALANDRE, EMSEMBLE SUPPORT *FRONT PANEL, SUPPORT SET*	176

PLANCHE - PLATE 176

Pos.	Fact. code	Code	Description FR	*Description GB*	V	W&T	REF.	NOTES	S/N BREAK
1	NA3041	0UNJPL	TOLE DESSUS CALANDRE 1GR	*TOP DISPLAY SHEET 1GR*			e;f;i;n;o;p;q;r;s;t;u;v;w;e1;f1;g1		
1	NA3042	0UNI7C	TOLE DESSUS CALANDRE 2GR	*TOP DISPLAY SHEET 2GR*			a;b;c;d;g;h;j;k;l;m;x;y;z;a1;b1;c1;d1		
2	50126	0UN615	VIS TB CRUCIFORME A EMBASE M4 x 12	*CRUCIFORM SCREW M4 x 12*				MOQ = 50	
3	PG14	0UN277	ECROU M4	*NUT M4*					
4	PG15B	0UNA3S	RONDELLE INOX 4.2X10X0.8	*WASHER*					
5	NA3038		TOLE SUPPORT CALANDRE 1GR	*HOLDER DISPLAY SHEET 1GR*			e;f;i;n;o;p;q;r;s;t;u;v;w;e1;f1;g1		
5	NA3039		TOLE SUPPORT CALANDRE 2GR	*HOLDER DISPLAY SHEET 2GR*			a;b;c;d;g;h;j;k;l;m;x;y;z;a1;b1;c1;d1		
6	NA2016		SNAKE AXE RENFORT	*REINFORCED AXLE SNAKE*					
7	NA4013	0UNJPM	VIS ÉPAULÉE TH M5	*SCREW TH M5*					
8	FR4056	0UN462	VIS SPECIAL COTE	*SIDE SCREW*					
9	51101	0UNA5V	ECROU M5 INOX	*NUT M5*					
10	NA4012		AXE RAIDISSEUR CALANDRE 2GR	*STIFFENER AXIS FRONT PANEL*			a;b;c;d;g;h;j;k;l;m;x;y;z;a1;b1;c1;d1		
10	NA4042		AXE RAIDISSEUR CALANDRE 1GR	*STIFFENER AXIS FRONT PANEL 1GR*			e;f;i;n;o;p;q;r;s;t;u;v;w;e1;f1;g1		
11	NA4040	0UNJPN	AXE RESSORT CALANDRE	*SPRING AXLE FOR FRONT PANEL*					
12	NA2015	0UNJPO	SNAKE STANDARD DROIT	*RIGHT STANDARD SNAKE*					
13	51100	0UNA5V	ECROU M5 INOX	*NUT M5*					
14	PE59	0UN201	VIS TCHC M4x10 INOX	*SCREW 4 X 10*					
15	NA4041	0UNJPP	RESSORT CALANDRE	*SPRING FOR FRONT PANEL*					
16	51065		ECROU A SERTIR M4 INOX	*NUT TO CRIMP M4 STAINLESS STEEL*					
17	NA2013		TRAVERSE CALANDRE 1GR	*FRONT PANEL CROSSING SHEET 1GR*			e;f;i;n;o;p;q;r;s;t;u;v;w;e1;f1;g1		
17	NA2014		TRAVERSE CALANDRE 2GR	*FRONT PANEL CROSSING SHEET 2GR*			a;b;c;d;g;h;j;k;l;m;x;y;z;a1;b1;c1;d1		
18	NA2048		TOLE CACHE CABLE CALANDRE	*CABLE HIDING SHEET*					
19	NA2019		SNAKE STANDARD GAUCHE	*LEFT STANDARD SNAKE*					

Note : No code → unavailable for spare parts

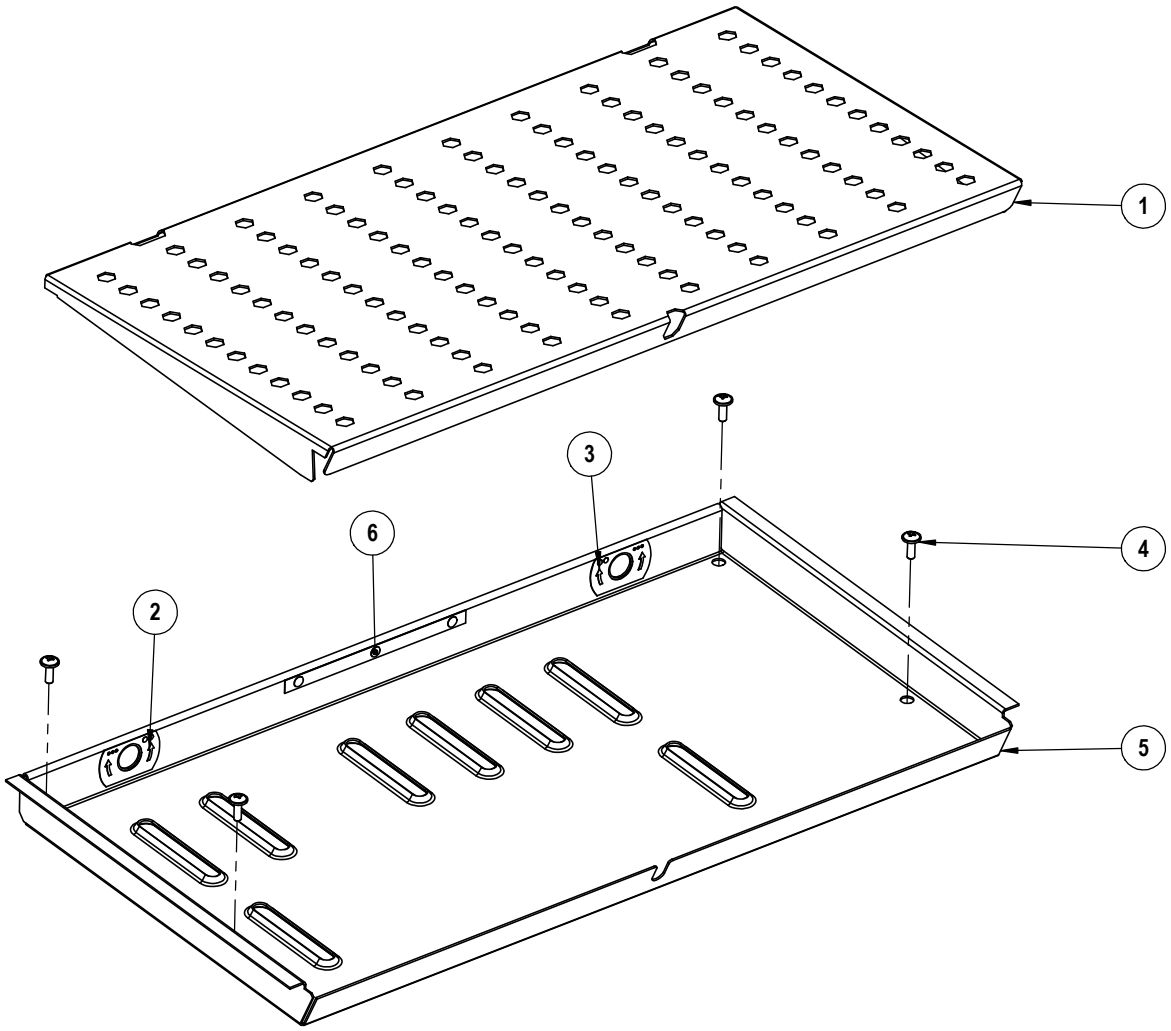

09/24	**CHAUFFE TASSES** *CUP WARMER*	180

PLANCHE - PLATE 180

Pos.	Fact. code	Code	Description FR	*Description GB*	V	W&T	REF.	NOTES	S/N BREAK
1	NA3017	0UNJNG	VERRIERE 1GR	*1GR CUPS RACK*			e;f;i;n;o;p;q;r;s;t;u;v;w;e1;f1;g1		
1	NA3018	0UNI7D	VERRIERE 2GR	*2GR CUPS RACK*			a;b;c;d;g;h;j;k;l;m;x;y;z;a1;b1;c1;d1		
2	46323	0UNJPQ	STICKER REGLAGE MOULIN GAUCHE TANGO XP	*LEFT GRINDER SETTING STICKER*					
3	46324	0UNJPR	STICKER REGLAGE MOULIN DROIT TANGO XP	*RIGHT GRINDER SETTING STICKER*					
4	50126	0UN615	VIS TB CRUCIFORME A EMBASE M4 x 12	*CRUCIFORM SCREW M4 x 12*				MOQ = 50	
5	NA3014	0UNJNH	CHAUFFE TASSES 1GR	*1GR CUPS WARMER*			e;f;i;n;o;p;q;r;s;t;u;v;w;e1;f1;g1		
5	NA3015	0UNI7E	CHAUFFE TASSES 2GR	*2GR CUPS WARMER*			a;b;c;d;g;h;j;k;l;m;x;y;z;a1;b1;c1;d1		
6	46322		STICKER COULEURS MOULINS TANGO XP	*GRINDERS STICKER*					

Note : No code → unavailable for spare parts

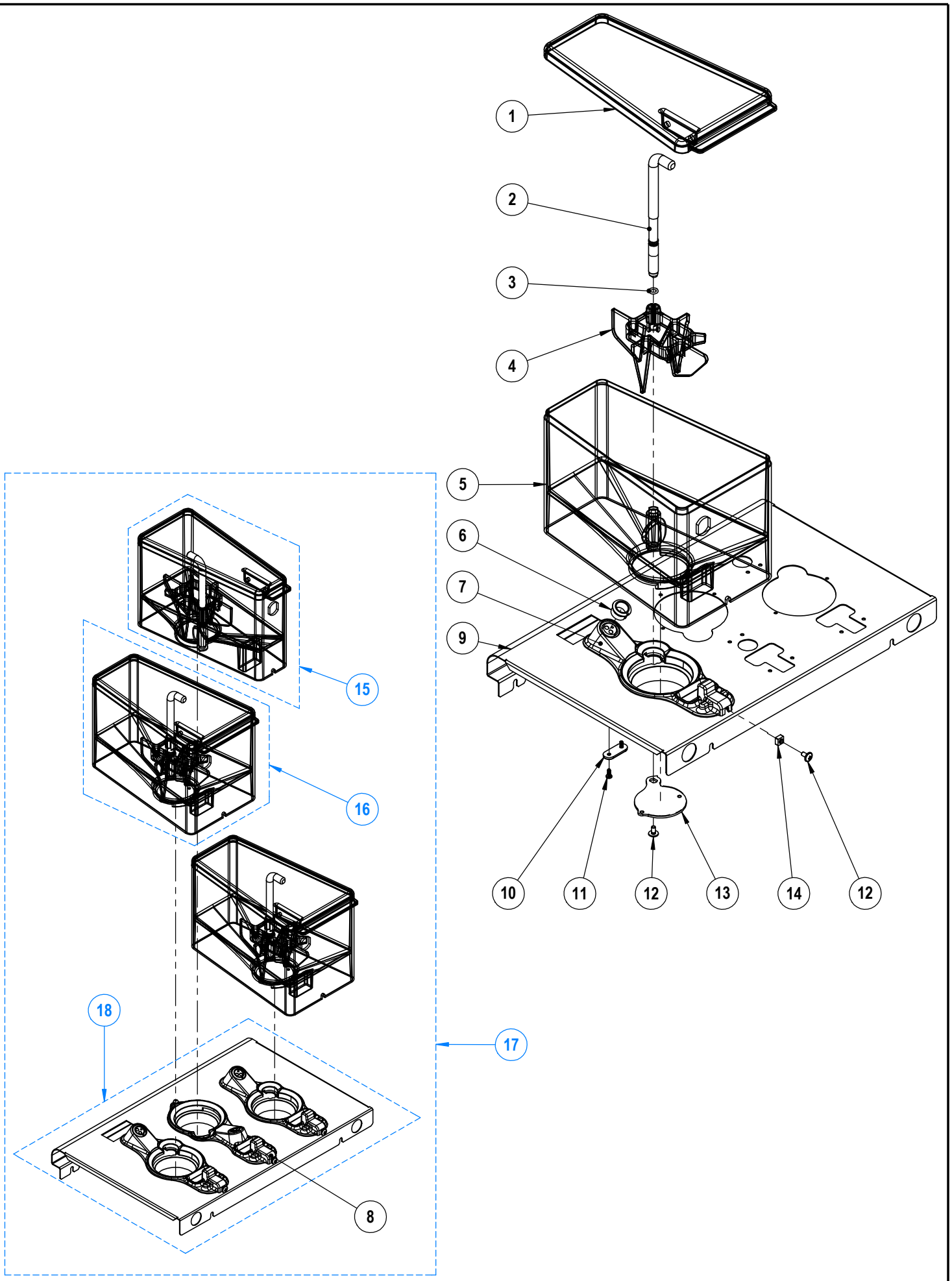

09/24	**ENSEMBLE TREMIES UL** *HOPPERS UNIT*	186

PLANCHE - PLATE 186

Pos.	Fact. code	Code	Description FR	*Description GB*	V	W&T	REF.	NOTES	S/N BREAK
1	NA7042	0UNJPS	COUVERCLE PETITE TREMIE AMELIORE	*COVER SMALL HOPPER UPGRADED*					
1	NA7043	0UNJPT	COUVERCLE GRANDE TREMIE AMELIORE	*COVER BIG HOPPER UPGRADED*					
2	NA4002	0UNJPU	AXE ROTATIF TREMIE	*ROTOR AXLE HOPPER*					
3	CN198	0UN178	JOINT TORIQUE 1,78X6,07 FKM	*GASKET - 6.07 x 1.78*					
4	NA7048	0UNJPV	GRILLE PROTECTION TREMIE	*HOPPER PROTECTION GRID*					
5	NA7040		PETITE TREMIE AMELIORE	*SMALL HOPPER UPGRADED*					
5	NA7041	0UNJPW	GRANDE TREMIE AMELIORE	*BIG HOPPER UPGRADED*					
6	FR4190	0UN942	SUPPORT CELLULE TREMIE	*SENSOR HOLDER*					
7	NA7045	0UNJO9	INTERFACE GRANDE TREMIE	*INTERFACE BIG HOPPER*					
8	NA7044	0UNJPA	INTERFACE PETITE TREMIE	*INTERFACE SMALL HOPPER*					
9	NA3025	0UNJRZ	CASQUETTE 2 TREMIES 1GR	*2 HOPPERS TOP PLATE 1GR*			e;f;n;o;r;s;t;g1		
9	NA3026	0UNJO8	CASQUETTE 3 TREMIES 1GR	*3 HOPPERS TOP PLATE 1GR*			i;p;q;u;v;w;e1;f1		
9	NA3027	0UNJPX	CASQUETTE 2 TREMIES 2GR	*2 HOPPERS TOP PLATE 2GR*			a;b;g;h;j;x;y;z;d1		
9	NA3028	0UNJO7	CASQUETTE 3 TREMIES 2GR	*3 HOPPERS TOP PLATE 2GR*			c;d;k;l;m;a1;b1c1		
10	NA7049	0UNJPY	GUIDE OBTURATEUR TREMIE	*SKATE BLADE GUIDE*					
11	50703	0UNDLF	VIS PARKER N6 9.5 SP CRUCIF.	*PARKER SCREW*					
12	50125	0UNA68	VIS TB CRUCIFORME A EMBASE M4 x 8	*CRUCIFORM SCREW M4 x 8*				MOQ = 50	
13	NA2042	0UNJPZ	OBTURATEUR DE TREMIE	*HOPPER CLOSING BLADE*					
14	TG4004	0UN587	ECROU INSERT	*INSERT NUT*					
15	NA1110	0UNJJZ	ENSEMBLE PETITE TREMIE AMELIORE	*SMALL HOPPER ASSEMBLED*					
16	NA1111	0UNJK0	ENSEMBLE GRANDE TREMIE AMELIORE	*BIG HOPPER ASSEMBLED*					
17	NA1112	0UNJK1	KIT TREMIE AMELIORE SOLO 2 MOULINS	*HOPPER SOLO 2 GRINDERS KIT*			e;f;n;o;r;s;t;g1		
17	NA1113	0UNJK2	KIT TREMIE AMELIORE SOLO 3 MOULINS	*HOPPER SOLO 3 GRINDERS KIT*			i;p;q;u;v;w;e1;f1		
17	NA1114	0UNJK3	KIT TREMIE AMELIORE DUO 2 MOULINS	*HOPPER DUO 2 GRINDERS KIT*			a;b;g;h;j;x;y;z;d1		
17	NA1115	0UNJK4	KIT TREMIE AMELIORE DUO 3 MOULINS	*HOPPER DUO 3 GRINDERS KIT*			c;d;k;l;m;a1;b1c1		
18	NA1116	0UNJTX	KIT CASQUETTE 2 TREMIES 1GR	*2 HOPPERS TOP PLATE 1GR KIT*			e;f;n;o;r;s;t;g1		
18	NA1117	0UNJTY	KIT CASQUETTE 3 TREMIES 1GR	*3 HOPPERS TOP PLATE 1GR KIT*			i;p;q;u;v;w;e1;f1		
18	NA1118	0UNJTZ	KIT CASQUETTE 2 TREMIES 2GR	*2 HOPPERS TOP PLATE 2GR KIT*			a;b;g;h;j;x;y;z;d1		
18	NA1119	0UNJU0	KIT CASQUETTE 3 TREMIES 2GR	*3 HOPPERS TOP PLATE 2GR KIT*			c;d;k;l;m;a1;b1c1		

Note : No code → unavailable for spare parts

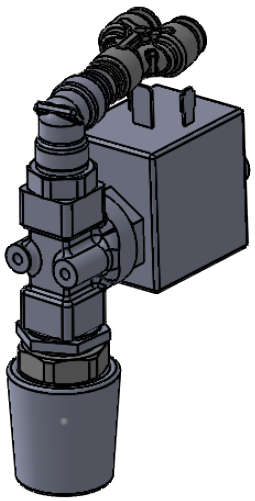

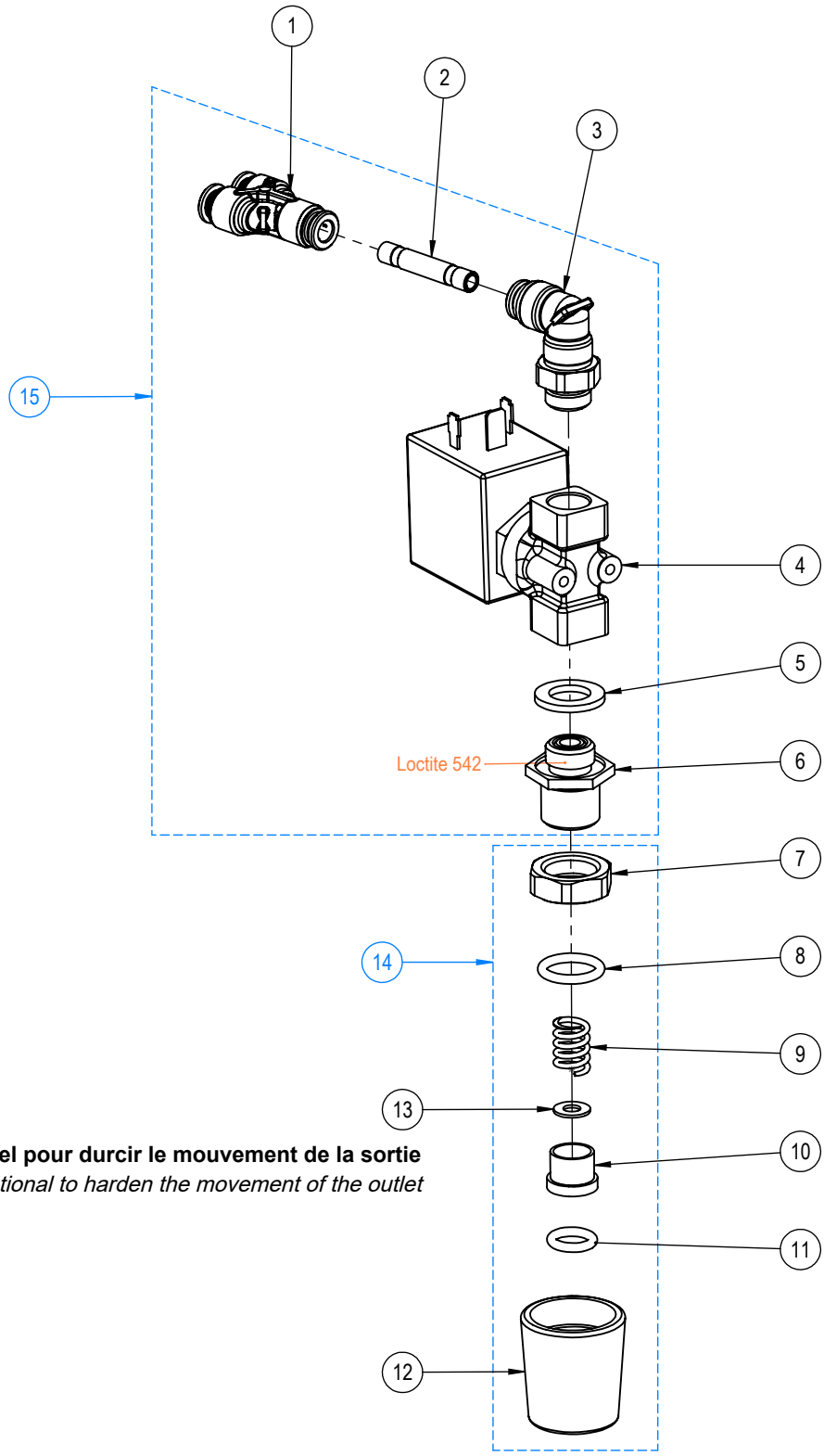

Optionnel pour durcir le mouvement de la sortie
Optional to harden the movement of the outlet

04/23	SORTIE EV VAPEUR TANGO XP *EV STEAM OUTLET TANGO XP*	202

PLANCHE - PLATE 202

Pos.	Fact. code	Code	Description FR	*Description GB*	V	W&T	REF.	NOTES	S/N BREAK
1	23258	0UNJC1	RACCORD Y - D6 - INOX	*FITTING Y D6*					
2	23253	0UNJC4	TIGE CONNEXION 2x D6 INOX	*CONNECTION ROD 2x D6 STAINLESS STEEL*					
3	23250	0UNJC3	COUDE 90° G1/4 MALE -D6 - INOX	*STAINLESS STEEL FITTING ELBOW*					
4	35145	0UN654	ELECTROVANNE 3/2 24V-50/60 NICKELEE	*ELECTROVALVE 3/2 24V-50/60 NICKEL-PLATED*					
5	28352	0UN017	JOINT PLAT 20X12X2 EPDM 70SH	*GASKET 20X12X2*					
6	DV171A	0UNJLC	RACCORD 3/8-1/4	*FITTING 3/8*					
7	DV170	0UN645	ECROU CHROME	*NUT 3/8*					
8	PH54	0UN133	JOINT TORIQUE 2,62X13,95 EPDM	*O RING - 13.95 x 2.62*					
9	PA43	0UN199	RESSORT F15/10 L14,5 D10,5 P3	*SPRING*					
10	RR67A	0UN210	EMBOUT LAITON	*BRASS END*					
11	PH78	0UN202	JOINT TORIQUE 2,62X9,13 EPDM	*O RING - 9,13 X 2,62*					
12	25915	0UN531	CACHE SORTIE EAU VAPEUR	*COVER OUTLET STEAM WATER*					
13	AG14	0UN176	JOINT CUIVRE M12	*COPPER GASKET*					
14	NA1063	0UNJU3	KIT SORTIE	*OUTLET KIT*					
15	NA1024	0UNI7F	EV VAPEUR	*STEAM EV*			a;b;c;d;e;f;i;r;t;u;w;x;z;a1;c1;e1		

Note : No code → unavailable for spare parts

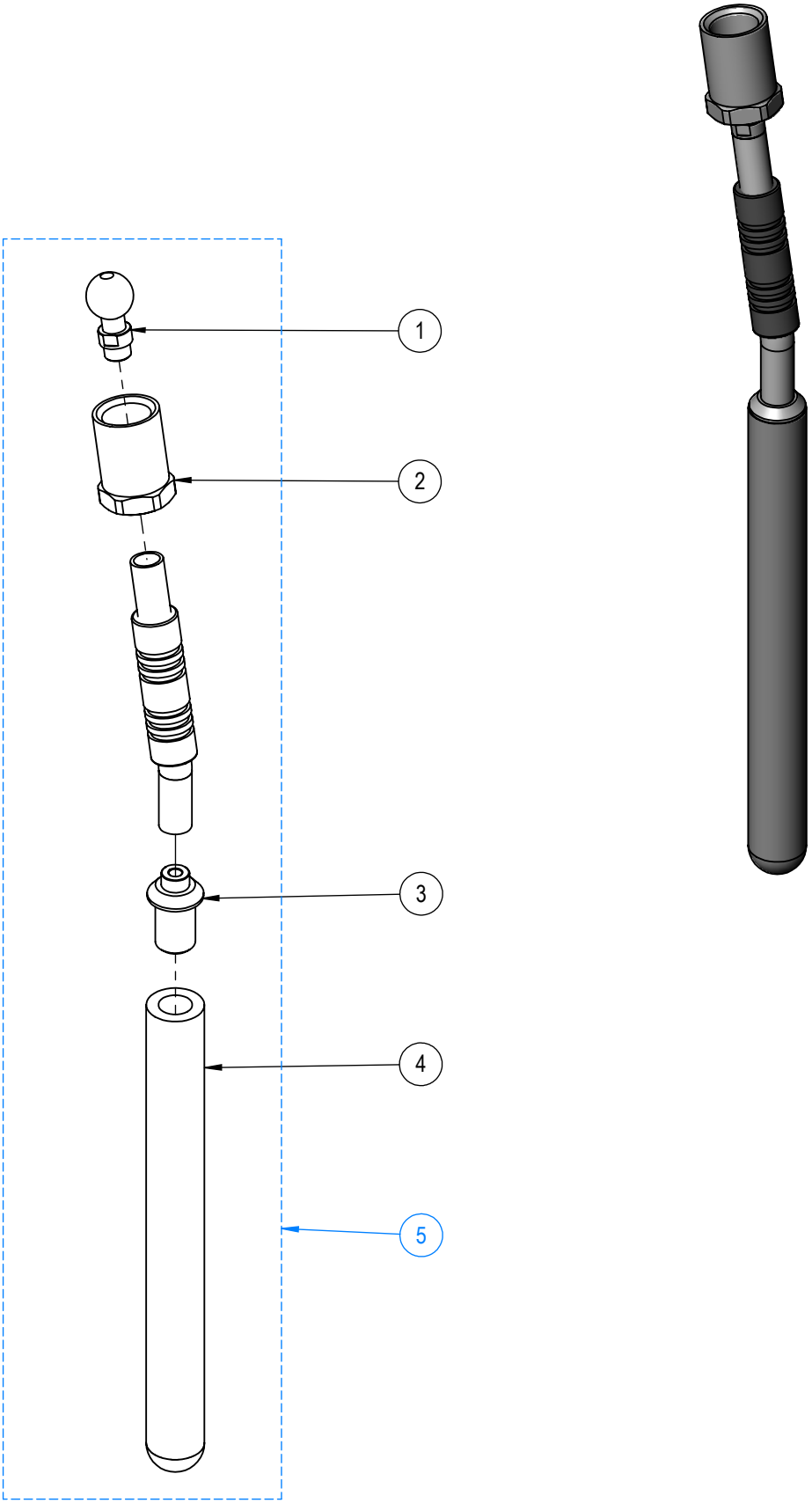

10/23	SORTIE VAPEUR STD *STD STEAM OUTLET*	222

PLANCHE - PLATE 222

Pos.	Fact. code	Code	Description FR	*Description GB*	V	W&T	REF.	NOTES	S/N BREAK
1	25932		EMBOUT POUR TUBE	*TIP FOR PIPE*					
2	25933		ECROU POUR TUBE	*NUT FOR PIPE*					
3	25958	0UNJM8	RACCORD TEFLON NOIR M8	*FITTING M8*					
4	25957	0UNJM7	EMBOUT TEFLON NOIR XP	*PIPE TANGO XP*					
5	25954	0UNJFQ	SORTIE VAPEUR TANGO XP	*STEAM OUTLET TANGO XP*			a;b;c;d;e;f;i;r;t;u;w;x;z;a1;c1;e1		

Note : No code → unavailable for spare parts

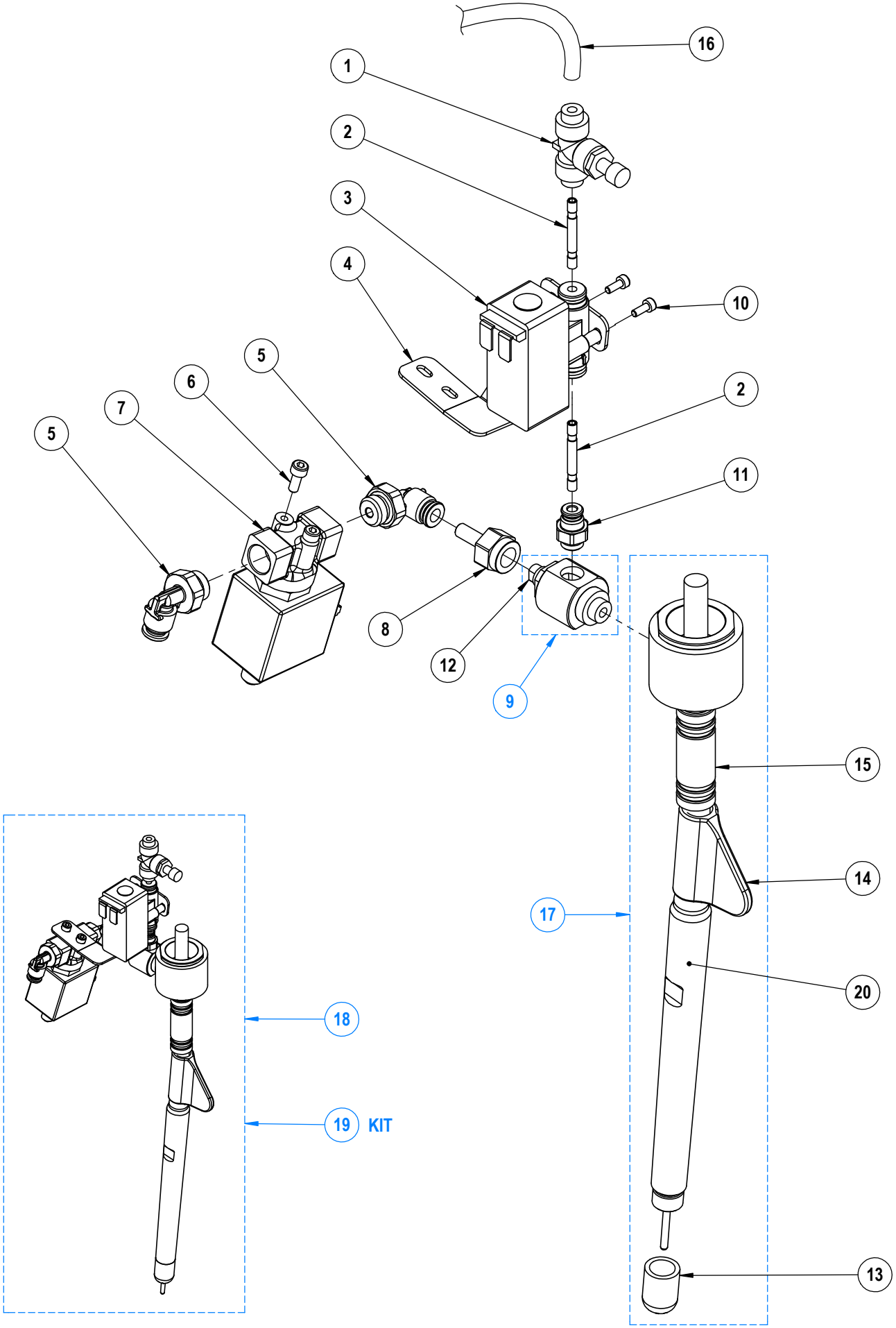

09/24	**SORTIE STEAMAIR ITALCOPPIE** *STEAMAIR OUTLET*	243

PLANCHE - PLATE 243

Pos.	Fact. code	Code	Description FR	*Description GB*	V	W&T	REF.	NOTES	S/N BREAK
1	23619	0UN044	REGLAGE AIR MICROMETRIQUE C/F D:4 F-F	*SETTING AIR HOT/COLD D:4 F-F*					
2	23208	0UNJC9	TIGE CONNEXION 2x D4 INOX	*CONNECTION ROD 2x D4 STAINLESS STEEL*					
3	35504	0UNI9N	EV 24V DC D4FF DN1,5	*2 WAYS 24VDC Ø4FF DN1,5*					
4	NA2030		SUPPORT EV STEAMAIR	*STEAMAIR ELECTROVALVE HOLDER*					
5	23250	0UNJC3	COUDE 90° G1/4 MALE -D6 - INOX	*STAINLESS STEEL FITTING ELBOW*					
6	PE59	0UN201	VIS TCHC M4x10 INOX	*SCREW 4 X 10*					
7	35145	0UN654	ELECTROVANNE 3/2 24V-50/60 NICKELEE	*ELECTROVALVE 3/2 24V-50/60 NICKEL-PLATED*					
8	NA4072		RACCORD EV STEAMAIR	*STEAMAIR VALVE CONNECTOR*					
9	25956		RACCORD PRISE D'AIR VAPEUR TANGO XP	*AIR/STEAM FITTING*					
10	CN306	0UN997	VIS INOX TCHC 3 x 8	*SCREW M3 X 8*					
11	23203	0UNI7Q	RACCORD G1/8 MALE - D4 - INOX	*STAINLESS STEEL FITTING G1/8M D4*					
12	25961	0UNJHL	GICLEUR STEAMAIR Ø2,2	*NOZZLE*					
13	25965	0UNJHN	EMBOUT 10X1,5	*SPRINKLER 10X1.5*					
14	25963	0UNJHM	PROTECTION LANGUETTE	*PROCTECTION*					
15	25962		PROTECTION CYLINDRIQUE	*CYLINDRIC PROCTECTION*					
16	NA6503		TUBE steamair 450mm + silicone	*450mm pipe + silicone*					
17	25955		SORTIE STEAMAIR TANGO XP	*STEAMAIR OUTLET TANGO XP*			g;h;j;k;l;m;n;o;p;q;s;v;y;b1;d1;f1;g1		
18	NA1086	0UNJFE	SORTIE STEAMAIR NEXT GEN	*NEXT GEN STEAMAIR OUTLET*			g;h;j;k;l;m;n;o;p;q;s;v;y;b1;d1;f1;g1		
19	NA1105	0UNJJV	Kit Steamair XP	*STEAMAIR XP KIT*			g;h;j;k;l;m;n;o;p;q;s;v;y;b1;d1;f1;g1		
20	25950		TUBE AVANT EMBOUT STEAMAIR	*STEAMAIR PIPE*					

Note : No code → unavailable for spare parts

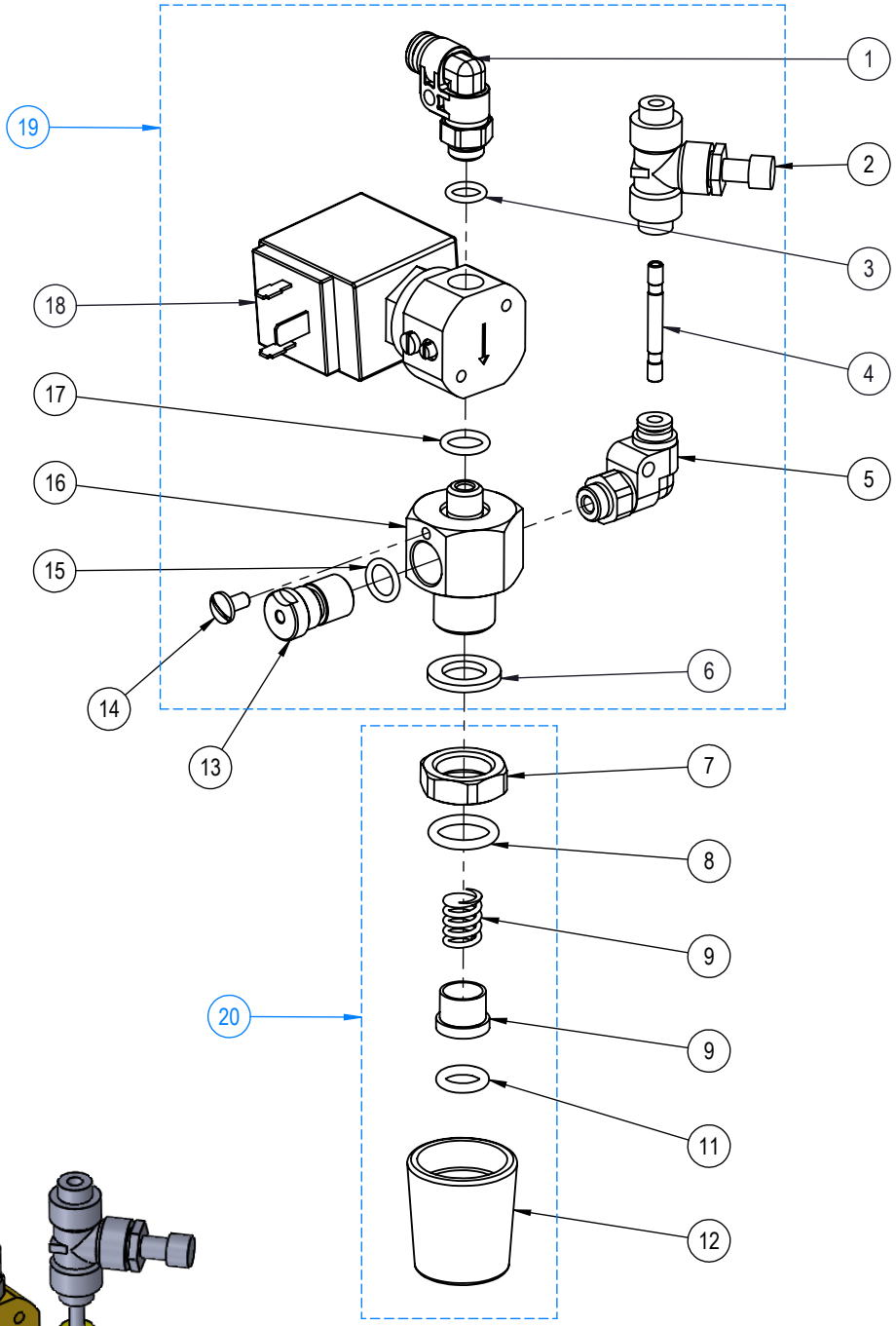

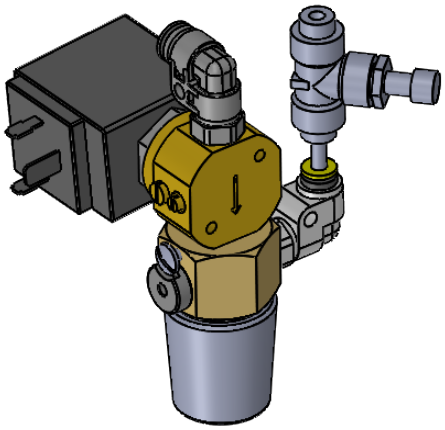

04/23	SORTIE EV EAU CHAUDE *HOT WATER OUTLET*	252

PLANCHE - PLATE 252

Pos.	Fact. code	Code	Description FR	*Description GB*	V	W&T	REF.	NOTES	S/N BREAK
1	23650	0UNJLZ	RACCORD COUDÉ G1/8male D6	*90° elbow adaptor G1/8male D6*					
2	23619	0UN044	REGLAGE AIR MICROMETRIQUE C/F D:4 F-F	*SETTING AIR HOT/COLD D:4 F-F*					
3	NA47	0UNFVP	JOINT TORIQUE 1.78X7.66 EPDM	*O RING - 1.78 X 7.66 EPDM*					
4	23208	0UNJC9	TIGE CONNEXION 2x D4 INOX	*CONNECTION ROD 2x D4 STAINLESS STEEL*					
5	23615	0UN120	RACCORD RAPIDE COUDE D:4 F-1/8G	*ELBOW QUICK FITTING D:4 F-1/8G*					
6	28352	0UN017	JOINT PLAT 20X12X2 EPDM 70SH	*GASKET 20X12X2*					
7	DV170	0UN645	ECROU CHROME	*NUT 3/8*					
8	PH54	0UN133	JOINT TORIQUE 2,62X13,95 EPDM	*O RING - 13.95 x 2.62*					
9	PA43	0UN199	RESSORT F15/10 L14,5 D10,5 P3	*SPRING*					
10	RR67A	0UN210	EMBOUT LAITON	*BRASS END*					
11	PH78	0UN202	JOINT TORIQUE 2,62X9,13 EPDM	*O RING - 9,13 X 2,62*					
12	25915	0UN531	CACHE SORTIE EAU VAPEUR	*COVER OUTLET STEAM WATER*					
13	FR4138	0UN923	BOUCHON MELANGEUR	*MIXER CAP*					
14	ID129	0UNA5Z	VIS INOX POELIER VM 4 X 8	*SCREW 4 X 8*					
15	CN436	0UN145	JOINT TORIQUE 1,78X8,73 EPDM	*GASKET 8,73 X 1,78*					
16	FR4136	0UN375	RACCORD SORTIE EAU MITIGEE	*MIXED WATER FITTING*					
17	28104	0UN146	JOINT TORIQUE 2X9,5 FKM 80SH	*GASKET 2X9,5*					
18	35515	0UN551	EV 2 VOIES 24V 50-60HZ NSF	*EV 2 WAYS 24V 50-60HZ NSF*					
19	NA1023	0UNI7G	EV EAU CHAUDE	*HOT WATER EV*					
20	NA1063	0UNJU3	KIT SORTIE	*OUTLET KIT*					

Note : No code → unavailable for spare parts

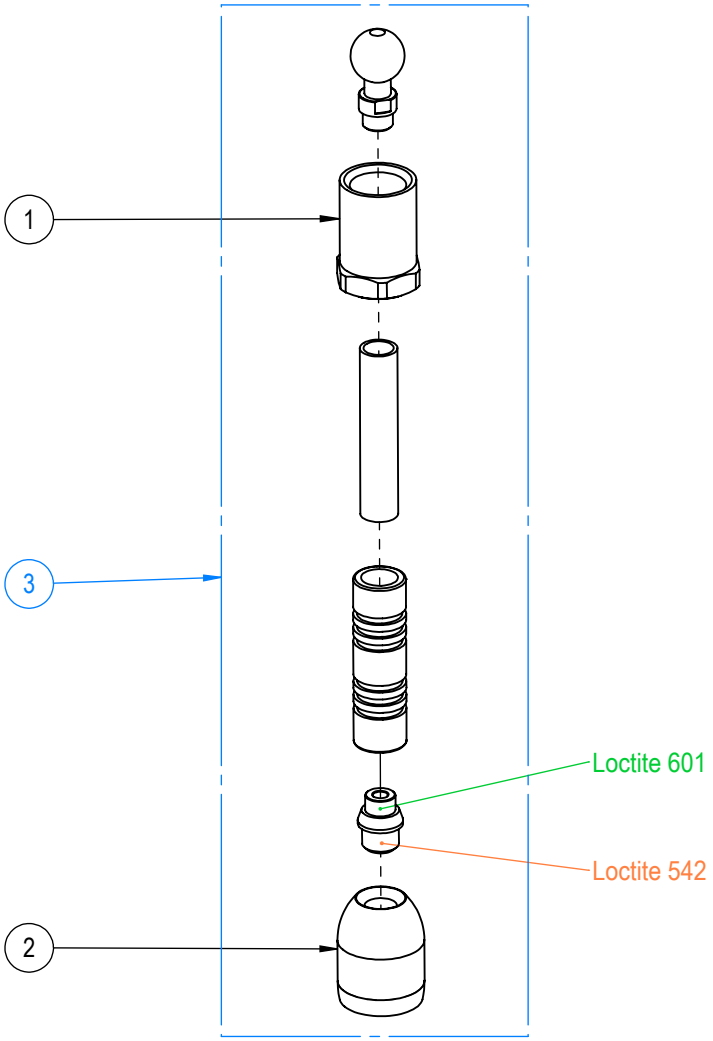

08/21	SORTIE EAU CHAUDE *HOT WATER OULTET*	260

PLANCHE - PLATE 260

Pos.	Fact. code	Code	Description FR	*Description GB*	V	W&T	REF.	NOTES	S/N BREAK
1	25933		ECROU POUR TUBE	*NUT FOR PIPE*					
2	25716	0UNC1X	BRISE JET POUR TUBE INOX EAU CHAUDE	*WINDSHIELD FOR HOT WATER PIPE*					
3	25732	0UNI7H	SORTIE EAU CHAUDE TANGO	*HOT WATER OUTLET*					

Note : No code → unavailable for spare parts

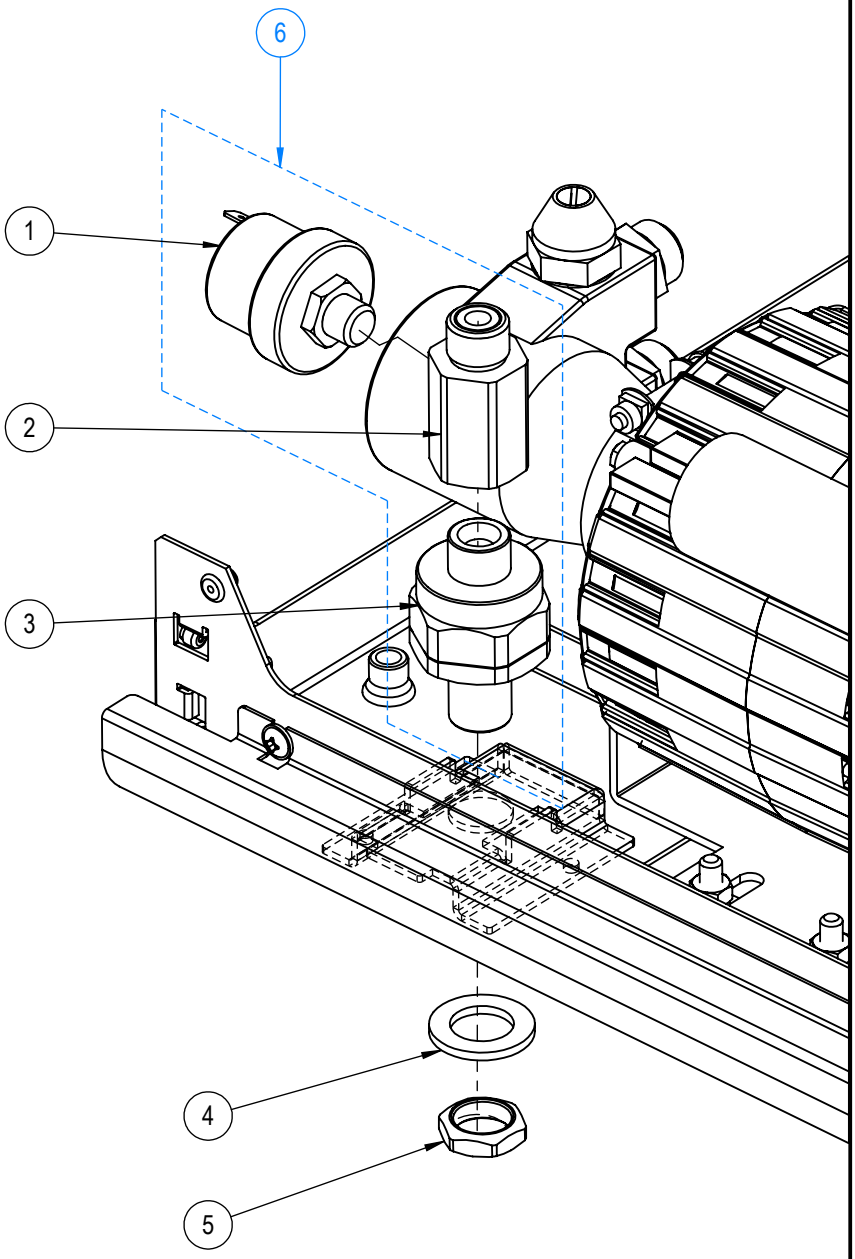

08/24	ENSEMBLE ENTRÉE D'EAU *WATER INLET SET*	311

PLANCHE - PLATE 311

Pos.	Fact. code	Code	Description FR	*Description GB*	V	W&T	REF.	NOTES	S/N BREAK
1	33705	0UNI5V	PRESSOSTAT 1-5 BAR GP600	*PRESSURESTAT 1-5 BAR GP600*					
2	NA4031	0UNJQ0	RACCORD CAPTEUR SECU EAU	*WATER SAFETY FITTING*					
3	25402	0UNC1V	FILTRE ENTRÉE D'EAU 3/8	*WATER FILTER 3/8*					
4	CN544	0UN901	RONDELLE ACIER ZN 17 x 28 x 2	*WASHER*					
5	NA18	0UN697	ECROU LAITON 3/8 6 mm	*3/8 NUT*					
6	NA1032	0UNI7I	ASM FILTRE ENTREE D'EAU	*INLET FILTER WATER SET*					

Note : No code → unavailable for spare parts

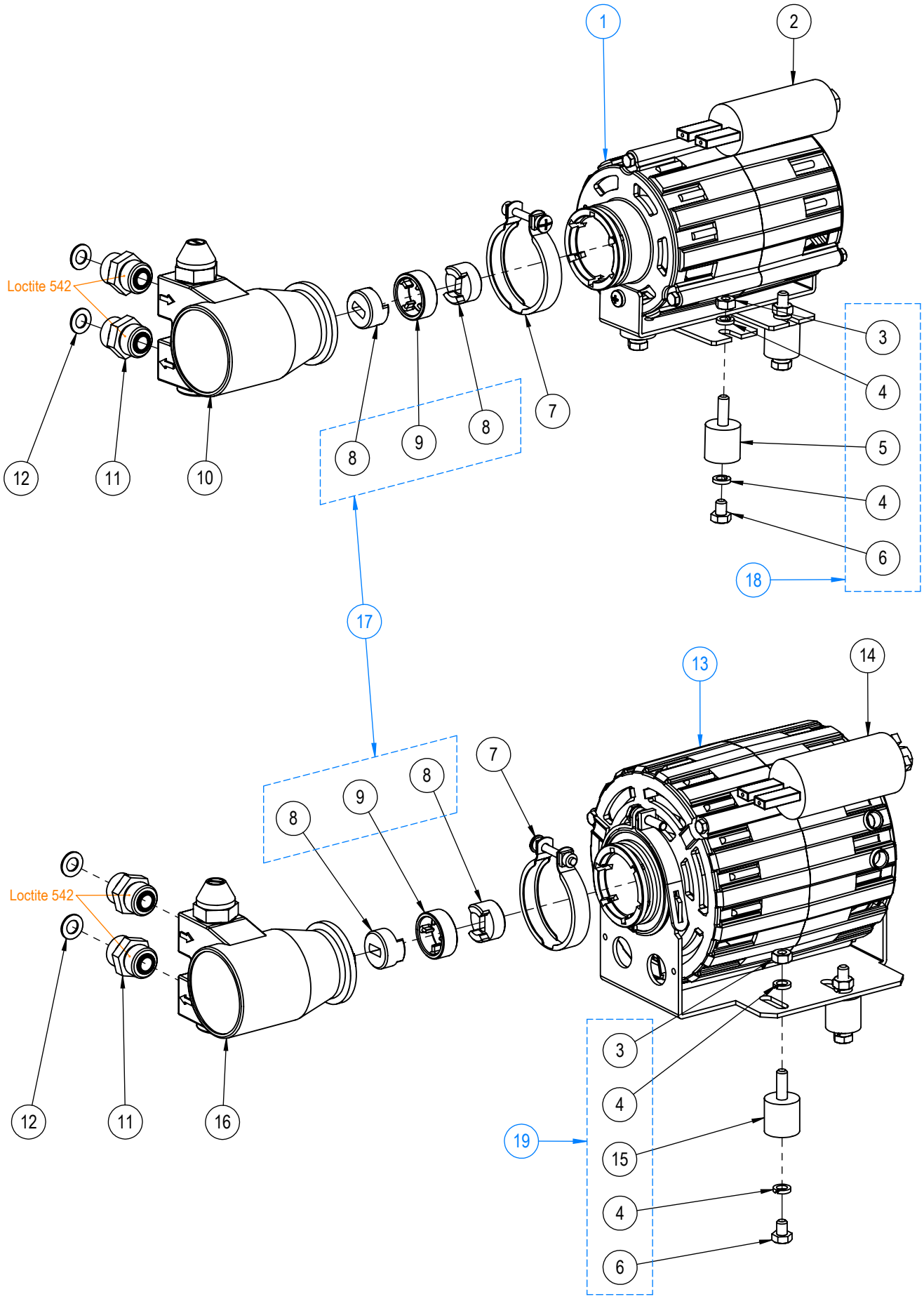

VERSION 2

10/23	MOTEUR POMPE 100L-200L *100L-200L MOTORS PUMPS*	320

PLANCHE - PLATE 320

Pos.	Fact. code	Code	Description FR	*Description GB*	V	W&T	REF.	NOTES	S/N BREAK
1	37228	0UNI9I	MOTEUR POMPE 120W 220-230V 50-60Hz UL	*PUMP MOTOR 120W 220-230V 50-60Hz UL*			n;o;p;q		
2	CN824	0UNI7M	CONDENSATEUR UL RPM POUR 37228	*UL CAPACITOR*			n;o;p;q	For 37228	
3	AE13A	0UNA42	ECROU INOX Hu 6-100	*NUT M6*					
4	51655	0UNA5W	RONDELLE GROWER DE 6	*WASHER 6*					
5	37265	0UNDBL	PLOT APB 20-20 45 SHORES	*SILENTBLOC*					
6	DO45	0UNDXI	VIS ACIER ZN TH 6 X 8	*SCREW 6 X 8*					
7	37219	0UNBY9	COLLIER POUR POMPE FLUIDOTECH	*CLAMP*					
8	37215	0UN524	JOINT D'ACCOUPLEMENT	*SLEEVE COUPLING*					
9	37211	0UN542	AMORTISSEUR ACCOUPLEMENT	*RUBBER COUPLING*					
10	37206	0UN382	POMPE ROTATIVE 100L/H SANS PLOMB	*UNLEADED PUMP 100L/H*					
11	CN347C	0UNJLB	RACCORD D'ALIM 3/8 3/8	*FITTING 3/8 3/8*					
12	CH16	0UN177	JOINT CUIVRE RECUIT 3/8	*WASHER - COPPER - 3/8*					
13	37229	0UNHU7	MOTEUR POMPE 165W 220-230V 50-60Hz UL	*PUMP MOTOR 165W 220-230V 50-60Hz UL*			g;h;l;m		
13	37244	0UNDBK	MOTEUR POMPE 165W 220-230V 50-60Hz	*PUMP MOTOR 165W 220-230V 50-60Hz*			a;b;c;d;e;f;i;j;k;r;s;t;u;v;w;x;y;z;a1;b1;c1;d1;e1;f1;g1		
14	CN822	0UNI7K	CONDENSATEUR UL RPM POUR 37229	*UL CAPACITOR*			g;h;l;m	For 37229	
15	DO19	0UN687	PLOT APB 20-20	*SILENTBLOC*					
16	37207	0UN056	POMPE ROTATIVE 200L/H SANS PLOMB	*UNLEADED PUMP 200L/H*					
17	37200	0UNJDW	KIT ACCOUPLEMENT (372211+37215)	*ACCOUPLING KIT*					
18	37208	0UNJU4	KIT FIXATION MOTEUR 120W	*120W FIXING MOTOR KIT*					
19	37209	0UNJU5	KIT FIXATION MOTEUR 165W	*165W FIXING MOTOR KIT*					

Note : No code → unavailable for spare parts

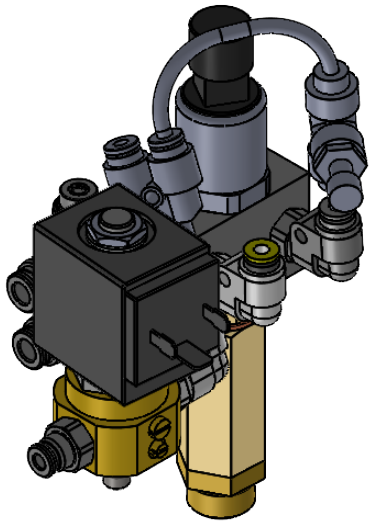

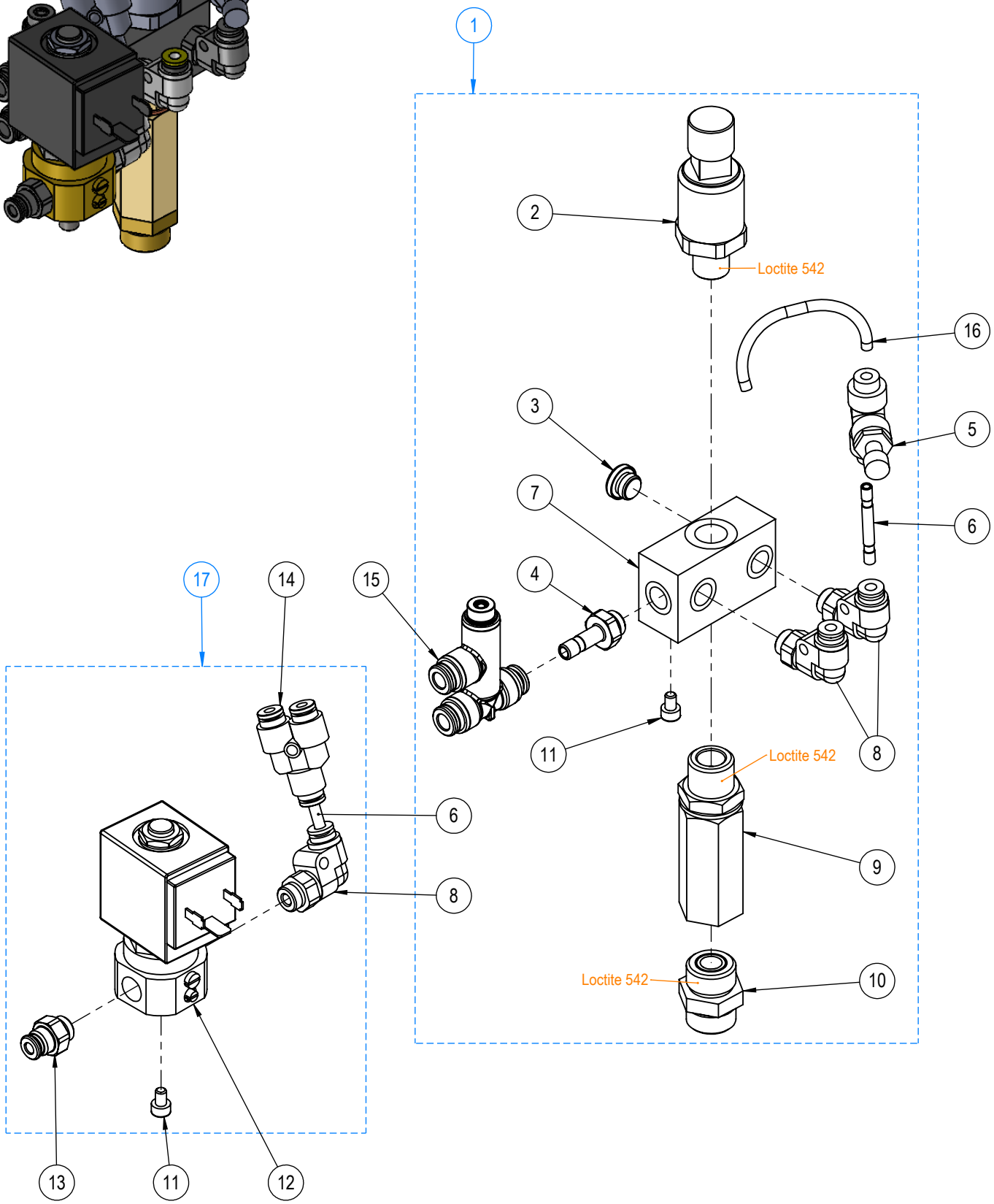

08/24	NOURRICE ALIMENTATION *WATER FEEDING UNIT*	336

PLANCHE - PLATE 336

Pos.	Fact. code	Code	Description FR	*Description GB*	V	W&T	REF.	NOTES	S/N BREAK
1	NA1017	0UNI7N	NOURRICE ALIMENTATION	*WATER FEEDING UNIT*					
2	36510MPH	0UNDBG	CAPTEUR DE PRESSION 0-16b HUBA	*0-16b PRESSURE SENSOR*					
3	23000	0UNI7P	BOUCHON G1/8 INOX	*PLUG G1/8 STAINLESS STEEL*					
4	23254	0UNJLS	RACCORD G1/8 MALE - TIGE D6 - INOX	*G1/8 MALE FITTING - D6 ROD - SS*					
5	23619	0UN044	REGLAGE AIR MICROMETRIQUE C/F D:4 F-F	*SETTING AIR HOT/COLD D:4 F-F*					
6	23208	0UNJC9	TIGE CONNEXION 2x D4 INOX	*CONNECTION ROD 2x D4 STAINLESS STEEL*					
7	NA4018	0UNJNL	NOURRICE	*MANIFOLD*					
8	23615	0UN120	RACCORD RAPIDE COUDE D:4 F-1/8G	*ELBOW QUICK FITTING D:4 F-1/8G*					
9	26302	0UNJI8	CLAPET ANTIRETOUR IN38F OUT38M	*NO RETURN VALVE 3/8*					
10	CN347C	0UNJLB	RACCORD D'ALIM 3/8 3/8	*FITTING 3/8 3/8*					
11	50106	0UN932	VIS TCHc M4 x 6	*SCREW M4 X 6*					
12	35515	0UN551	EV 2 VOIES 24V 50-60HZ NSF	*EV 2 WAYS 24V 50-60HZ NSF*					
13	23203	0UNI7Q	RACCORD G1/8 MALE - D4 - INOX	*STAINLESS STEEL FITTING G1/8M D4*					
14	23616	0UN048	RACCORD RAPIDE Y D:4 F-F-F	*QUICK FITTING Y D:4 F-F-F*					
15	23653	0UNI7O	VALVE DE SECURITE 12bar	*safety valve 12bar*					
16	NA6500	0UNJDX	12734 DIAM 2,5-4 L: 1M	*12735 DIAM 2,5-4 L: 1M*				LG: 150 MM	
17	NA1102	0UNJQ1	EV REMPLISSAGE DUO	*FILLING EV DUO*			a;b;c;d;g;h;j;k;l;m;x;y;z;a1;b1;c1;d1		

Note : No code → unavailable for spare parts

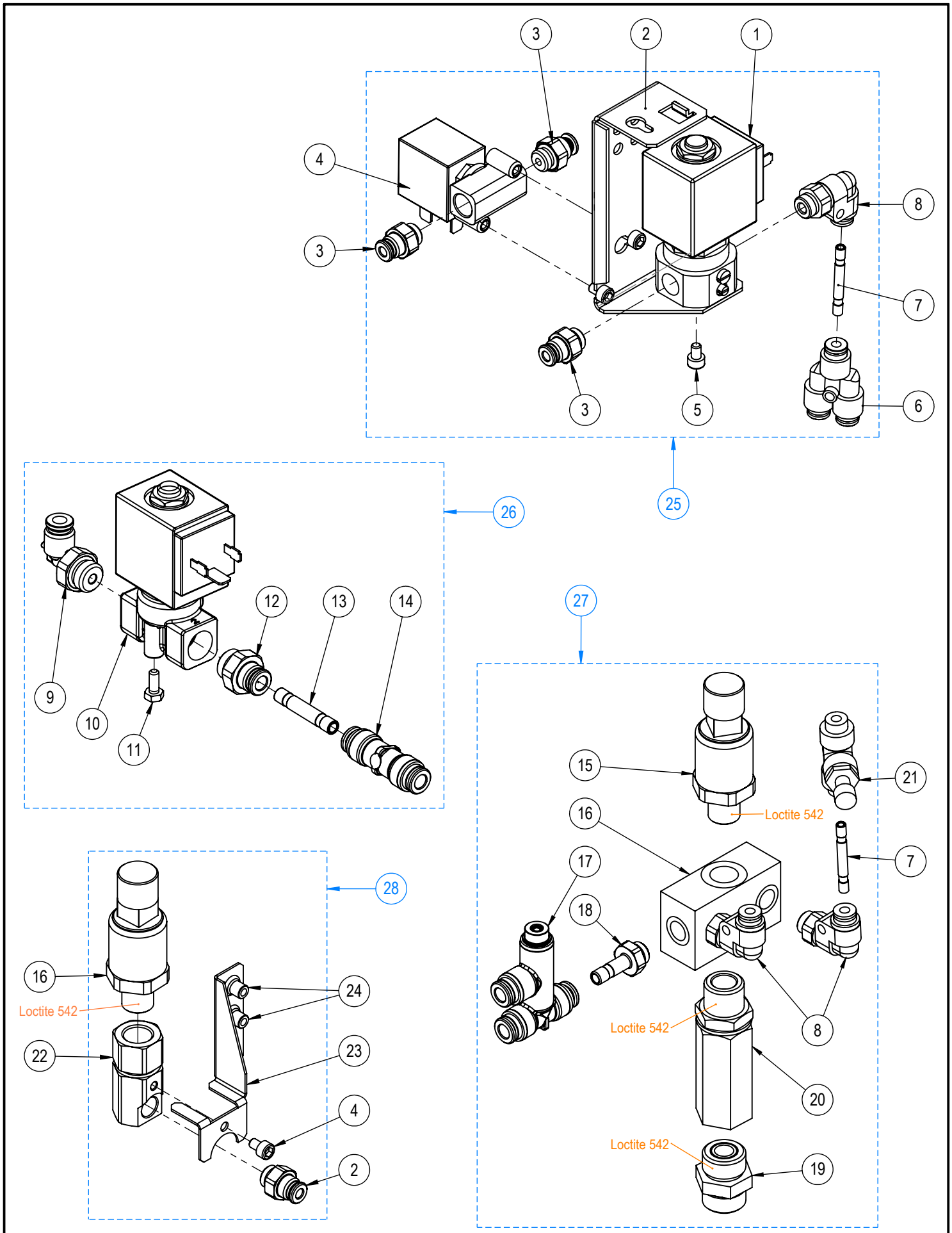

08/24	SOUS-EMSEMBLES HYDRAULIQUES *SUB-ASSEMBLIES HYDRAULIC*	337

PLANCHE - PLATE 337

Pos.	Fact. code	Code	Description FR	*Description GB*	V	W&T	REF.	NOTES	S/N BREAK
1	35515	0UN551	EV 2 VOIES 24V 50-60HZ NSF	*EV 2 WAYS 24V 50-60HZ NSF*					
2	NA2026		TOLE MAINTIEN EV 35500	*EV HOLDER 1 UNIT*					
3	23203	0UNI7Q	RACCORD G1/8 MALE - D4 - INOX	*STAINLESS STEEL FITTING G1/8M D4*					
4	35505	0UN437	ELECTROVANNE 2 VOIES 24V NSF	*2 WAYS ELECTROVALVE*					
5	50106	0UN932	VIS TCHc M4 x 6	*SCREW M4 X 6*					
6	23616	0UN048	RACCORD RAPIDE Y D:4 F-F-F	*QUICK FITTING Y D:4 F-F-F*					
7	23208	0UNJC9	TIGE CONNEXION 2x D4 INOX	*CONNECTION ROD 2x D4 STAINLESS STEEL*					
8	23615	0UN120	RACCORD RAPIDE COUDE D:4 F-1/8G	*ELBOW QUICK FITTING D:4 F-1/8G*					
9	23250	0UNJC3	COUDE 90° G1/4 MALE -D6 - INOX	*STAINLESS STEEL FITTING ELBOW*					
10	35510	0UN451	EV 2 VOIES 24V NSF	*ELECTROVALVE 2 WAYS 24V NSF*					
11	50118	0UNA64	VIS TH M4X10 INOX	*S.STEEL SCREW M4X10*					
12	23252	0UNI7R	RACCORD G1/4 MALE - D6 - INOX	*STAINLESS STEEL FITTING G1/4M D6*					
13	23253	0UNJC4	TIGE CONNEXION 2x D6 INOX	*CONNECTION ROD 2x D6 STAINLESS STEEL*					
14	23652	0UNJC5	CLAPET ANTI-RETOUR D6	*non return valve D6 with push*					
15	36510MPH	0UNDBG	CAPTEUR DE PRESSION 0-16b HUBA	*0-16b PRESSURE SENSOR*					
16	NA4018	0UNJNL	NOURRICE	*MANIFOLD*					
17	23653	0UNI7O	VALVE DE SECURITE 12bar	*safety valve 12bar*					
18	23254	0UNJLS	RACCORD G1/8 MALE - TIGE D6 - INOX	*G1/8 MALE FITTING - D6 ROD - SS*					
19	CN347C	0UNJLB	RACCORD D'ALIM 3/8 3/8	*FITTING 3/8 3/8*					
20	26302	0UNJI8	CLAPET ANTIRETOUR IN38F OUT38M	*NO RETURN VALVE 3/8*					
21	23619	0UN044	REGLAGE AIR MICROMETRIQUE C/F D:4 F-F	*SETTING AIR HOT/COLD D:4 F-F*					
22	NA4015	0UNJM4	RACCORD CAPTEUR PRESSION	*PRESSURE SENSOR CONNECTION*					
23	NA2024		MAINTIEN EV-SOUPAPE-CAPTEUR	*EV-SENSOR-VALVE HOLDER*					
24	51065		ECROU A SERTIR M4 INOX	*NUT TO CRIMP M4 STAINLESS STEEL*					
25	NA1084	0UNJNP	ASM ALIM EAU 1GR	*WATER FEEDING UNIT*			e;f;i;n;o;p;q;r;s;t;u;v;w;e1;f1;g1		
26	NA1092	0UNJNW	ASM EV NETTOYAGE CAFE 1GR	*COFFEE CLEANING ELECTROVALVE SET*			e;f;i;n;o;p;q;r;s;t;u;v;w;e1;f1;g1		
27	NA1017	0UNI7N	NOURRICE ALIMENTATION	*WATER FEEDING UNIT*					
28	NA1085	0UNJNT	ASM CAPTEUR PRESSION SOLO	*PRESSURE SENSOR SET*			e;f;i;n;o;p;q;r;s;t;u;v;w;e1;f1;g1		

Note : No code → unavailable for spare parts

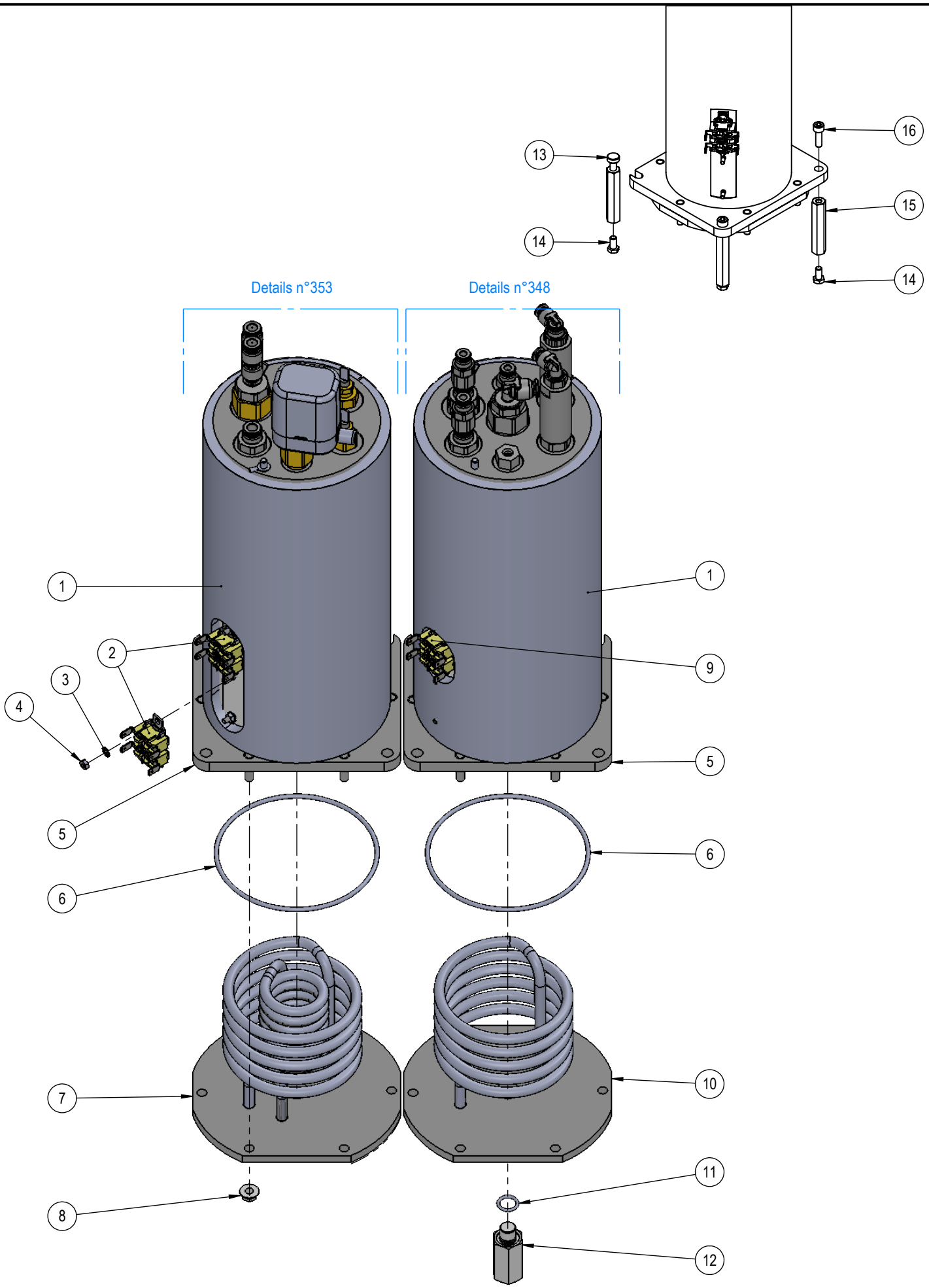

08/24	VUE D'ENSEMBLE CHAUDIERES TANGO XP *OVERVIEW TANGO XP BOILERS*	342

PLANCHE - PLATE 342

Pos.	Fact. code	Code	Description FR	*Description GB*	V	W&T	REF.	NOTES	S/N BREAK
1	85235	0UNJHY	ISOLANT CHAUDIERE NA	*BOILER INSULATOR*					
1	85240	0UNJQ2	ISOLANT CHAUDIERE VAPEUR XP UL	*BOILER INSULATOR*			g;h;l;m;n;o;p;q		
2	34212	0UNJI5	THERMOSTAT SECURITE MONO 145°C	*SAFETY THERMOSTAT 145°C*			a;b;c;d;e;f;i;j;k;r;s;t;u;v;w; x;y;z;a1;b1;c1;d1;e1;f1;g1		
2	34214	0UNJI7	THERMOSTAT SECURITE BIPOLAIRE	*SAFETY THERMOSTAT 145°C*			g;h;l;m;n;o;p;q		
3	CN342	0UNA3L	RONDELLE EVENTAIL 3	*WASHER 3*					
4	PG49	0UNA45	ECROU INOX Hu DE 3	*NUT M3*					
5	29035	0UNJQ3	CORPS CHAUDIERE	*BOILER BODY*					
6	29737	0UNI5W	JOINT CHAUDIERE NEW AUTOMATIC	*SEAL BOILER NA*					
7	29836	0UNI60	ELEM CHAUFFANT 5500W 230V MONO	*HEATING ELEMENT 5500W 230V MONO*					
8	51102	0UNA5V	ECROU M5 INOX	*NUT M5*					
9	34211	0UNJI4	THERMOSTAT SECURITE MONO 115°C	*SAFETY THERMOSTAT 115°C*			a;b;c;d;e;f;i;j;k;r;s;t;u;v;w; x;y;z;a1;b1;c1;d1;e1;f1;g1		
9	34213	0UNJI6	THERMOSTAT SECURITE BIPOLAIRE	*SAFETY THERMOSTAT 115°C*			g;h;l;m;n;o;p;q		
10	29835	0UNI5Z	ELEM CHAUFFANT 3000W 230V MONO	*HEATING ELEMENT 3000W 230V MONO*					
11	CN2850	0UN180	JOINT TORIQUE 1,78X10,82	*GASKET 10.82x1.78*					
12	NA4063	0UNJHZ	BOUCHON VIDANGE LONG	*LONG DRAIN PLUG*					
13	NA4001	0UNJLI	COLONNETTE SUPPORT CHAUDIERE	*BOILER SUPPORT COLUMN*					
14	50204	0UN982	VIS TH M5 x 10 INOX	*SCREW M5 X 10*					
15	NA4000	0UNJLE	COLONETTE FIXATION CHAUDIERE	*BOILER FIXING COLUMN*					
16	50212	0UNJK7	VIS M5 TCHC	*M5 SCREW TCHC*					

Note : No code → unavailable for spare parts

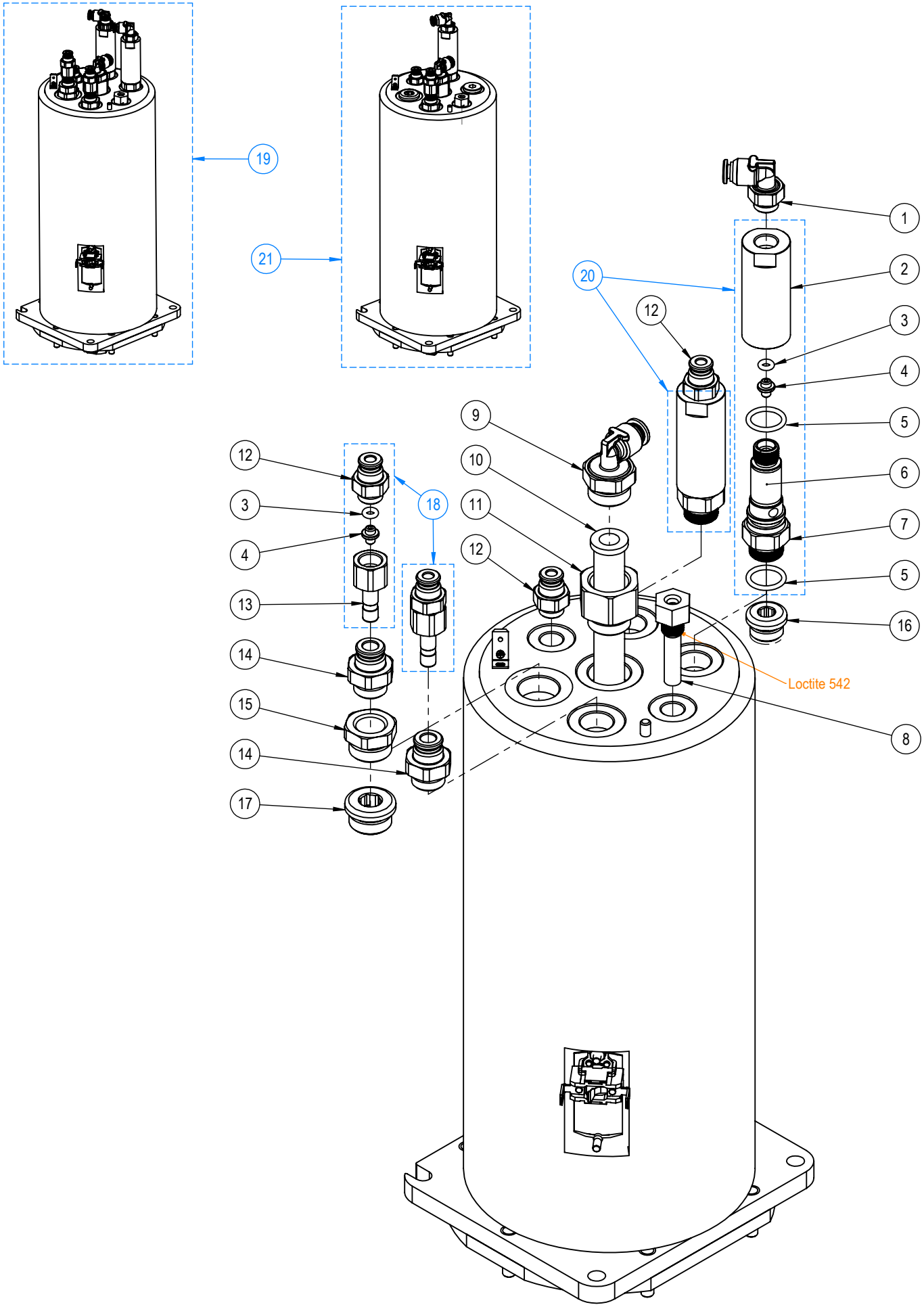

10/23	CHAUDIERE CAFE *COFFEE BOILER*	348

PLANCHE - PLATE 348

Pos.	Fact. code	Code	Description FR	*Description GB*	V	W&T	REF.	NOTES	S/N BREAK
1	23200	0UNJC2	COUDE 90° G1/8 MALE -D4 - INOX	*STAINLESS STEEL FITTING ELBOW*					
2	NA4021		CORPS PORTE GICLEUR	*JET HOLDER BODY*					
3	TC80	0UN211	JOINT TORIQUE 1,78X2,90 FKM	*GASKET 1.78X2.90 FKM*					
4	23117	0UN134	GICLEUR DIAM:0,7	*JET DIAM. 0.7*					
5	PA96	0UNBFV	JOINT TORIQUE 1,78X12,42 EPDM	*GASKET 1.78 X 12.42*					
6	CF326	0UNBPS	FILTRE INOX D.int=12 H=17,5	*FILTER D:12 H:17,5*					
7	NA4022		SUPPORT GICLEUR CAFE	*JET HOLDER COFFEE*					
8	34411	0UNI61	SONDE THERMOSTATIQUE	*THERMOSTATIC PROBE*					
9	23251	0UNI7U	COUDE 90° G3/8 MALE -D6 - INOX	*STAINLESS STEEL FITTING ELBOW*					
10	DV4000	0UNBLS	TUBE TEFLON ALIM. GROUPE L:72	*UNIT FEEDING TUBE*					
11	NA4019	0UNJHI	RACCORD ENTREE EAU CHAUDIERE	*WATER INLET BOILER FITTING*					
12	23203	0UNI7Q	RACCORD G1/8 MALE - D4 - INOX	*STAINLESS STEEL FITTING G1/8M D4*					
13	NA4020	0UNJQ4	SUPPORT GICLEUR AJOUT EAU	*JET HOLDER ADDING WATER*					
14	23252	0UNI7R	RACCORD G1/4 MALE - D6 - INOX	*STAINLESS STEEL FITTING G1/4M D6*					
15	22800	0UNI7S	REDUCER G3/8M - G1/4F INOX	*REDUCER G3/8M - G1/4F STAINLESS STEEL*					
16	23001	0UNJHX	BOUCHON G1/4 INOX	*PLUG G1/4 STAINLESS STEEL*			e;f;i;n;o;p;q;r;s;t;u;v;w;e1;f1;g1		
17	23002	0UNJQ5	BOUCHON G3/8 INOX	*PLUG G3/8 STAINLESS STEEL*			e;f;i;n;o;p;q;r;s;t;u;v;w;e1;f1;g1		
18	NA1019	0UNJDA	ENSEMBLE GICLEUR AJOUT EAU	*WATER ADDING JET ASSEMBLY*					
19	NA1025	0UNI7T	CHAUDIERE CAFE	*COFFEE BOILER*			a;b;c;d;j;k;x;y;z;a1;b1;c1;d1		
19	NA1025UL	0UNJS0	CHAUDIERE CAFE DUO UL	*COFFEE BOILER DUO*			g;h;l;m		
20	NA1018	0UNJDB	ENSEMBLE GICLEUR CAFE GAUCHE	*LEFT COFFEE JET ASSEMBLY*					
21	NA1076	0UNJO2	CHAUDIERE CAFE SOLO	*COFFEE BOILER SOLO*			e;f;i;r;s;t;u;v;w;e1;f1;g1		
21	NA1076UL	0UNJS1	CHAUDIERE CAFE SOLO UL	*COFFEE BOILER SOLO*			n;o;p;q		

Note : No code → unavailable for spare parts

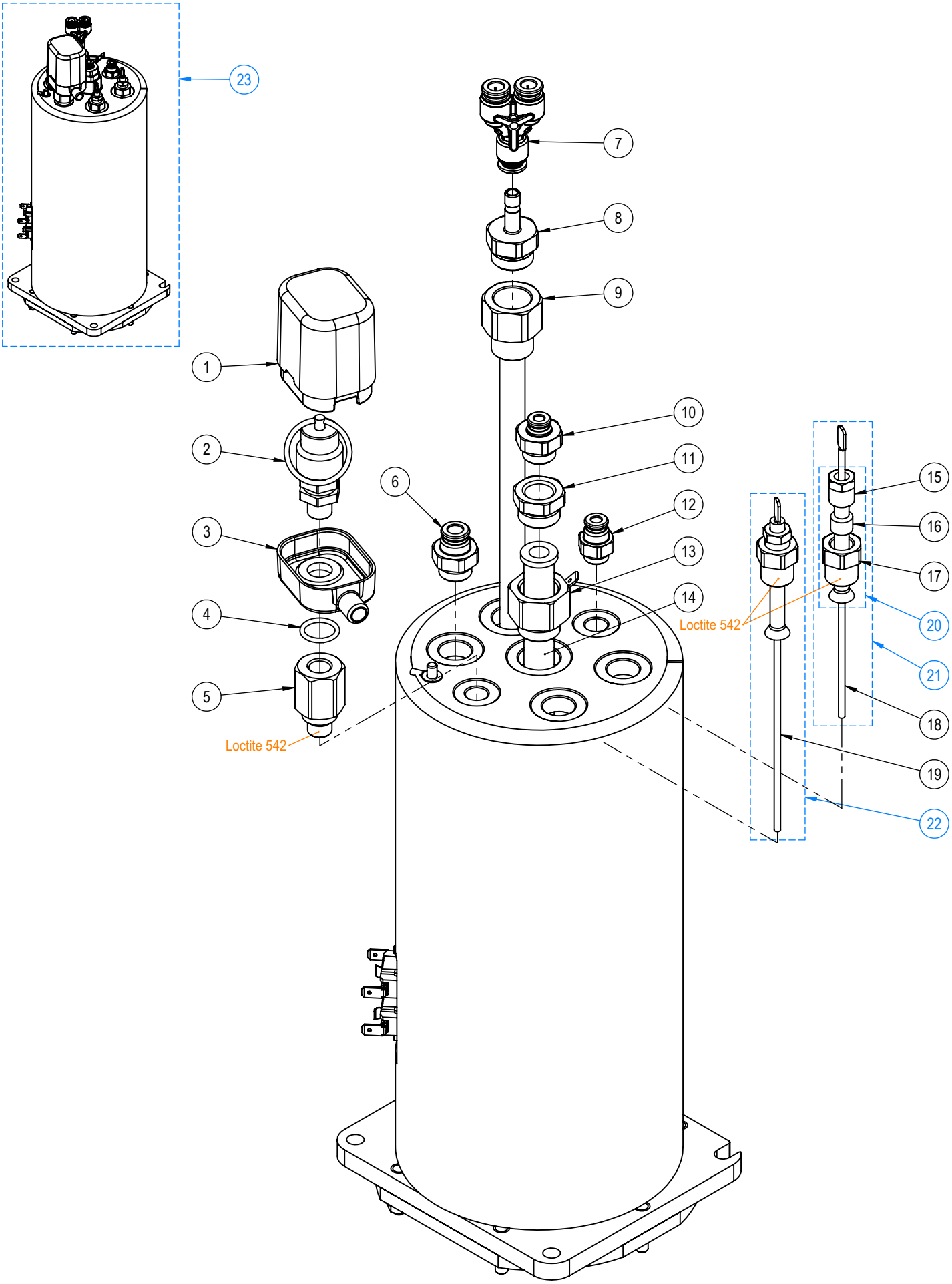

04/23	CHAUDIERE VAPEUR *STEAM BOILER*	353

PLANCHE - PLATE 353

Pos.	Fact. code	Code	Description FR	*Description GB*	V	W&T	REF.	NOTES	S/N BREAK
1	TG7023	0UNBY6	COUVERCLE PROTECTION SOUPAPE	*COVER VALVE PROTECTION*					
2	27200	0UN155	SOUPAPE VAPEUR BP 3,5 BARS	*LP VALVE 3.5 BARS*					
3	TG7022	0UNHRF	PROTECTION SOUPAPE	*VALVE PROTECTION*					
4	PA96	0UNBFV	JOINT TORIQUE 1,78X12,42 EPDM	*GASKET 1.78 X 12.42*					
5	TG4078	0UNJLU	SUPPORT SOUPAPE BP	*LP VALVE HOLDER*					
6	23252	0UNI7R	RACCORD G1/4 MALE - D6 - INOX	*STAINLESS STEEL FITTING G1/4M D6*					
7	23258	0UNJC1	RACCORD Y - D6 - INOX	*FITTING Y D6*					
8	23256	0UNJHF	RACCORD G3/8 MALE - TIGE D6 - INOX	*G3/8 MALE FITTING - D6 ROD - SS*					
9	NA6001		TUBE PLONGEUR EAU CHAUDE INOX	*DIVER PIPE HOT WATER*					
10	23202	0UNI7V	RACCORD G1/4 MALE - D4 - INOX	*STAINLESS STEEL FITTING G1/4M D4*					
11	22800	0UNI7S	REDUCER G3/8M - G1/4F INOX	*REDUCER G3/8M - G1/4F STAINLESS STEEL*					
12	23203	0UNI7Q	RACCORD G1/8 MALE - D4 - INOX	*STAINLESS STEEL FITTING G1/8M D4*					
13	NA4019	0UNJHI	RACCORD ENTREE EAU CHAUDIERE	*WATER INLET BOILER FITTING*					
14	FR4170	0UN299	TUBE TEFLON ALIM. GROUPE L:150	*UNIT FEEDING TUBE L150*					
15	NA70	0UN197	BLOCAGE ELECTRODE NIVEAU AUTO	*LEVEL PROBE COMPRESSION NUT*					
16	NA71	0UN198	PORTE-ELECTRODE EN TEFLON	*LEVEL PROBE INSULATION*					
17	23790	0UN957	PORTE SONDE EN LAITON	*LEVEL PROBE HOLDER*					
18	26500	0UNI62	SONDE DE NIVEAU L=130	*LEVEL PROBE L=130*					
19	26515	0UNBPP	SONDE DE NIVEAU L=150	*LEVEL PROBE*					
20	26502	0UN966	ENSEMBLE NIVEAU SONDE 3/8	*LEVEL PROBE 3/8 SET*					
21	26533	0UNI7W	SONDE NIVEAU COMPLETE 1/4 L130	*LEVEL PROBE L130*					
22	26532	0UNI7X	SONDE NIVEAU COMPLETE 1/4 L150	*LEVEL PROBE L150*					
23	NA1026	0UNJBH	CHAUDIERE VAPEUR	*STEAM BOILER*			a;b;c;d;e;f;i;j;k;r;s;t;u;v;w;x;y;z;a1;b1;c1;d1;e1;f1;g1		
23	NA1026UL	0UNJS2	CHAUDIERE VAPEUR UL	*STEAM BOILER*			g;h;l;m;n;o;p;q		

Note : No code → unavailable for spare parts

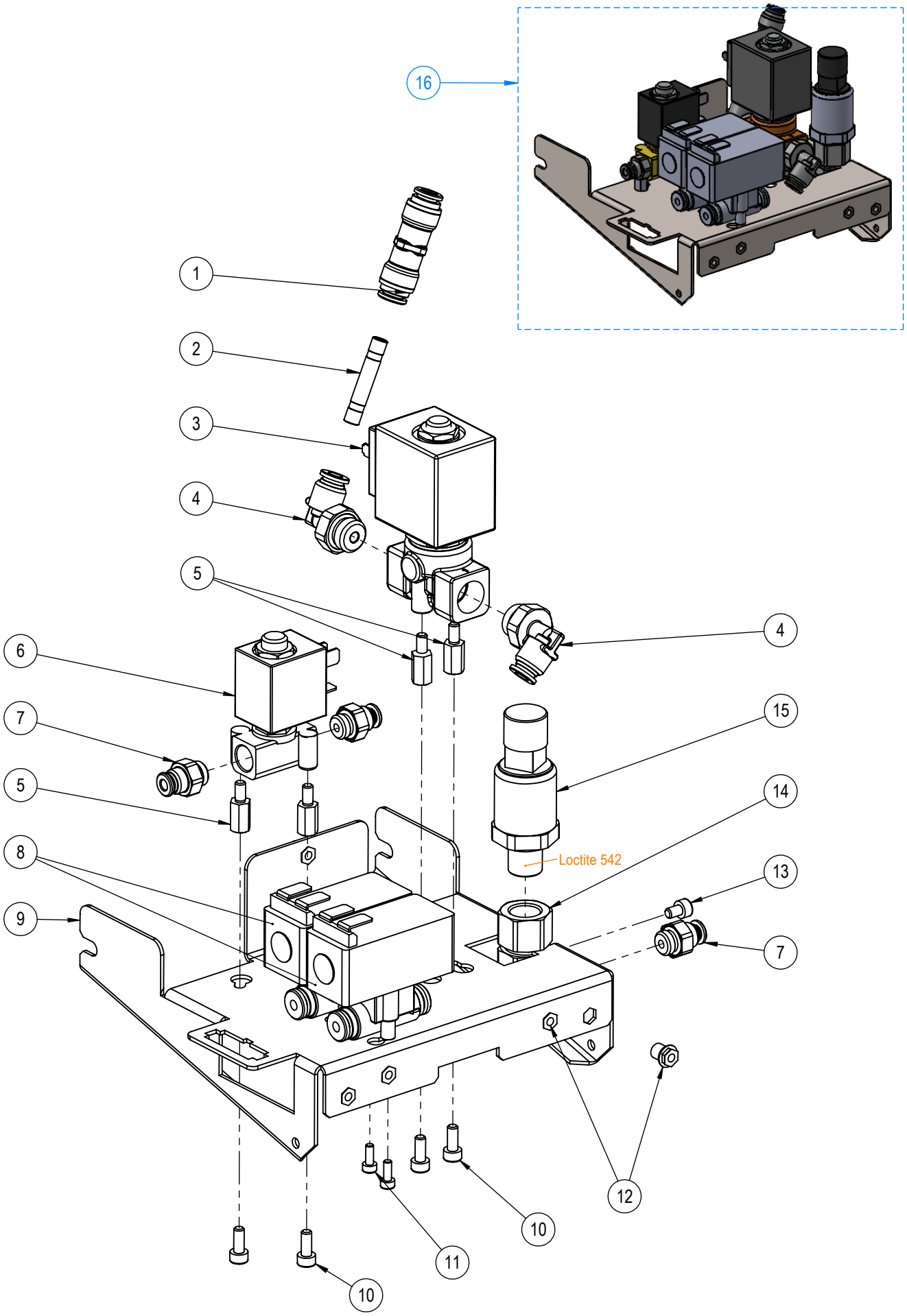

08/24	MODULE EV 2GR *ELECTROVALVE MODULE 2GR*	358

PLANCHE - PLATE 358

Pos.	Fact. code	Code	Description FR	*Description GB*	V	W&T	REF.	NOTES	S/N BREAK
1	23652	0UNJC5	CLAPET ANTI-RETOUR D6	*non return valve D6 with push*					
2	23253	0UNJC4	TIGE CONNEXION 2x D6 INOX	*CONNECTION ROD 2x D6 STAINLESS STEEL*					
3	35510	0UN451	EV 2 VOIES 24V NSF	*ELECTROVALVE 2 WAYS 24V NSF*					
4	23250	0UNJC3	COUDE 90° G1/4 MALE -D6 - INOX	*STAINLESS STEEL FITTING ELBOW*					
5	50113	0UNA1O	COLONNETTE M-F M4X13	*SPACER M-F M4X13*					
6	35505	0UN437	ELECTROVANNE 2 VOIES 24V NSF	*2 WAYS ELECTROVALVE*					
7	23203	0UNI7Q	RACCORD G1/8 MALE - D4 - INOX	*STAINLESS STEEL FITTING G1/8M D4*					
8	35504	0UNI9N	EV 24V DC D4FF DN1,5	*2 WAYS 24VDC Ø4FF DN1,5*					
9	NA2001	0UNJM9	SUPPORT BLOC EV	*EV BLOCK HOLDER*					
10	PE59	0UN201	VIS TCHC M4x10 INOX	*SCREW 4 X 10*					
11	CN306	0UN997	VIS INOX TCHC 3 x 8	*SCREW M3 X 8*					
12	51065		ECROU A SERTIR M4 INOX	*NUT TO CRIMP M4 STAINLESS STEEL*					
13	50106	0UN932	VIS TCHc M4 x 6	*SCREW M4 X 6*					
14	NA4015	0UNJM4	RACCORD CAPTEUR PRESSION	*PRESSURE SENSOR CONNECTION*					
15	36510MPH	0UNDBG	CAPTEUR DE PRESSION 0-16b HUBA	*0-16b PRESSURE SENSOR*					
16	NA1012	0UNI7Y	MODULE EV	*ELECTROVALVE MODULE*			a;b;c;d;g;h;j;k;l;m;x;y;z;a1;b1;c1;d1		

Note : No code → unavailable for spare parts

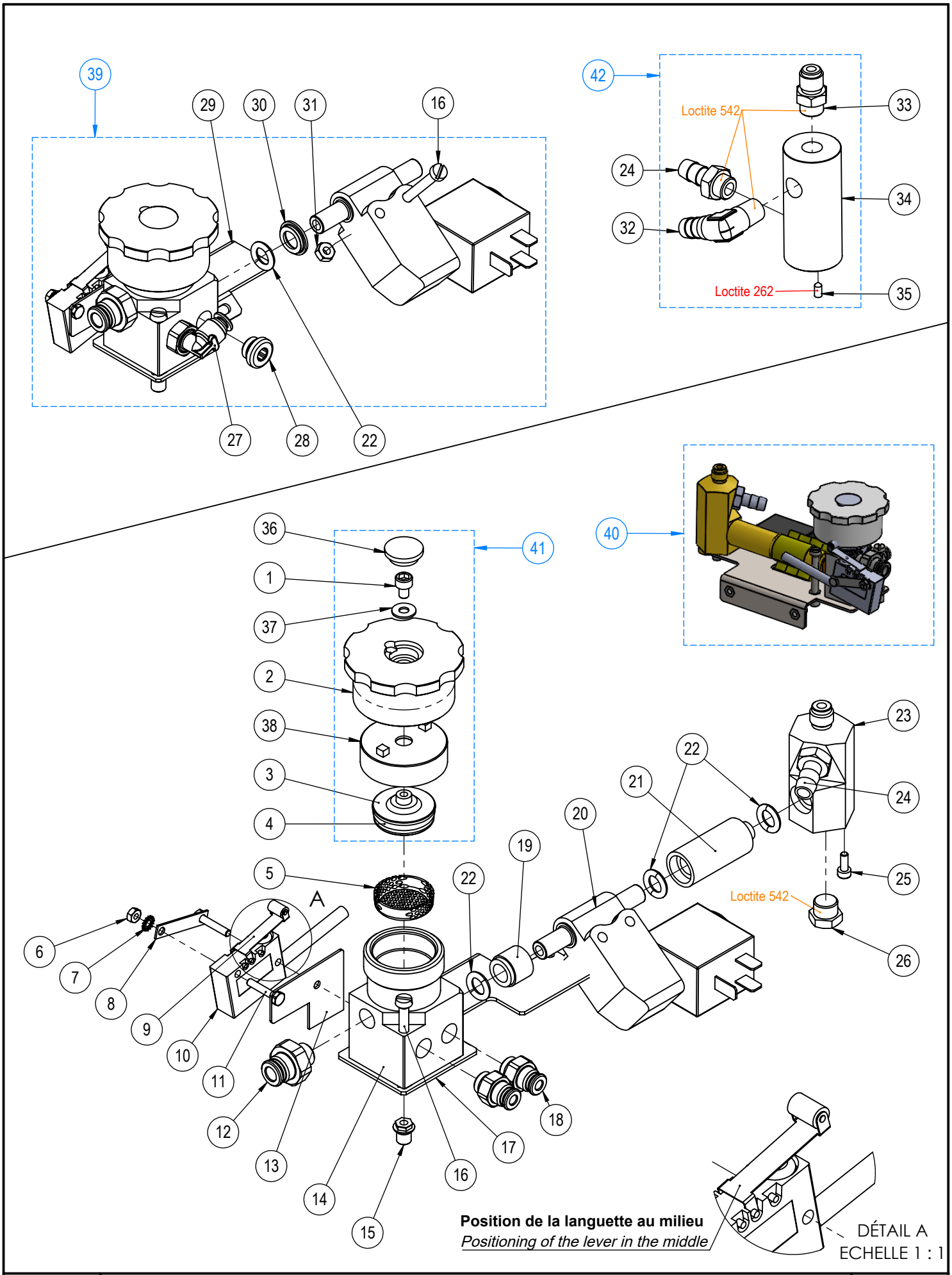

01/24	BLOC PASTILLES *PELLET PART SET*	365

PLANCHE - PLATE 365

Pos.	Fact. code	Code	Description FR	*Description GB*	V	W&T	REF.	NOTES	S/N BREAK
1	50106	0UN932	VIS TCHc M4 x 6	*SCREW M4 X 6*					
2	NA4036	0UNJNI	VOLANT DU BOUCHON	*CAP HANDWHEEL*					
3	NA4074	0UNJLY	OPERCULE TOURNANT	*ROTATING OBTURATOR*					
4	27901	0UNC3R	JOINT TORIQUE 3,53X18,64 FKM	*GASKET 3,53X18,64*					
5	FR2135	0UN286	GRILLE DU BLOC PASTILLE	*GRID*					
6	PG49	0UNA45	ECROU INOX Hu DE 3	*NUT M3*					
7	CN342	0UNA3L	RONDELLE EVENTAIL 3	*WASHER 3*					
8	CN37	0UNI80	PATTE INOX FIXATION MINIRUPT.	*MICROSWITCH HOLDING BAR*					
9	CN620	0UN182	LEVIER AV.RESSORT 161E r=24,1	*LEVER WITH CASTOR*					
10	CN642E	0UN326	MINIRUPTEUR ETANCHE	*WATERPROOF MICROSWITCH*					
11	50016	0UNI81	VIS TH M3 X 16	*SCREW M3 X 16*					
12	23259	0UNJC6	RACCORD G1/8 MALE - D6 - INOX	*STAINLESS STEEL FITTING G1/8M D6*					
13	NA2006	0UNI82	TOLE FIXATION BLOC PASTILLES	*TABLETS BLOCK FIXING SHEET*					
14	NA4017	0UNJNU	BLOC PASTILLES	*CLEANING BLOCK*					
15	51065		ECROU A SERTIR M4 INOX	*NUT TO CRIMP M4 STAINLESS STEEL*					
16	50120	0UN757	VIS TC M4X35 INOX	*S.STEEL SCREW M4X35*					
17	NA2005	0UNJLT	TOLE SUPPORT BLOC PASTILLES	*TABLETS BLOCK SUPPORT SHEET*			a;b;c;d;g;h;j;k;l;m;x;y;z;a1;b1;c1;d1		
18	23203	0UNI7Q	RACCORD G1/8 MALE - D4 - INOX	*STAINLESS STEEL FITTING G1/8M D4*					
19	TG4212	0UNJLA	ENTRETOISE DE MAINTIEN	*MAINTENANCE SPACER*			a;b;c;d;g;h;j;k;l;m;x;y;z;a1;b1;c1;d1		
20	35550	0UN022	ELECTROVANNE N.O 24V 50HZ	*ELECTROVALVE N.O 24V 50HZ*			a;b;c;d;e;f;i;j;k;r;s;t;u;v;w;x;y;z;a1;b1;c1;d1;e1;f1;g1		
20	35560	0UN307	ELECTROVANNE N.O 24V 60HZ UL	*ELECTROVALVE N.O 24V 60HZ UL*			g;h;l;m;n;o;p;q		
21	NA4029	0UNJLJ	RACCORD AVAL EV SIRAI	*FITTING SIRAI ELECTROVALVE*			a;b;c;d;g;h;j;k;l;m;x;y;z;a1;b1;c1;d1		
22	27821	0UN240	JOINT TORIQUE 2,62 X 7,59	*O-RING 2,62 X 7,59*					
23	NA4030	0UNJM5	RACCORD EV ANTI-CRUE	*RACCORD EV ANTI-OVERFLOW*					
24	21455	0UN912	RACCORD TETINE 1/8M D7	*FITTING 1/8M D7*					
25	CN306	0UN997	VIS INOX TCHC 3 x 8	*SCREW M3 X 8*					
26	21100	0UN994	BOUCHON 1/8	*PLUG 1/8*					
27	23200	0UNJC2	COUDE 90° G1/8 MALE -D4 - INOX	*STAINLESS STEEL FITTING ELBOW*					
28	23000	0UNI7P	BOUCHON G1/8 INOX	*PLUG G1/8 STAINLESS STEEL*					
29	NA2029	0UNJLW	TOLE SUPPORT BLOC PASTILLE 1GR	*TABLET BLOCK SUPPORT SHEET*			e;f;i;n;o;p;q;r;s;t;u;v;w;e1;f1;g1		
30	NA4067	0UNJLH	RONDELLE POUR 35550	*SPACER*			e;f;i;n;o;p;q;r;s;t;u;v;w;e1;f1;g1		
31	PG14	0UN277	ECROU M4	*NUT M4*			e;f;i;n;o;p;q;r;s;t;u;v;w;e1;f1;g1		
32	21456	0UN566	RACCORD COUDE 1/8M D7	*FITTING 1/8M D7*					
33	MI36	0UN422	RACCORD 1/8M 1/8M	*CONNECTION 1/8*					
34	NA4065	0UNJNB	RACCORD EV ANTI-CRUE 1GR	*FITTING EV ANTI-OVERFLOW 1GR*					
35	CN599	0UNBVU	VIS STHC M3X5	*SCREW STHC M3X5*					
36	ED118	0UNHTD	BOUCHON PLASTIQUE	*CAP*					
37	PG15B	0UNA3S	RONDELLE INOX 4.2X10X0.8	*WASHER*					
38	NA4038	0UNJM6	ECROU LAITON DU BOUCHON	*CAP NUT*					
39	NA1078	0UNJNZ	ENSEMBLE BLOC PASTILLES 1GR	*TABLETS BLOCK SET 1GR*			e;f;i;n;o;p;q;r;s;t;u;v;w;e1;f1;g1		
40	NA1011	0UNI7Z	ENSEMBLE BLOC PASTILLES 2GR	*TABLETS BLOCK SET 2GR*			a;b;c;d;g;h;j;k;l;m;x;y;z;a1;b1;c1;d1		
41	NA1065	0UNJBZ	ASM BOUCHON	*PLUG SUB ASSEMBLY*					
42	NA1097	0UNJPE	ASM ANTI-CRUE 1GR	*ANTI FLOOD SET*			e;f;i;n;o;p;q;r;s;t;u;v;w;e1;f1;g1		

Note : No code → unavailable for spare parts

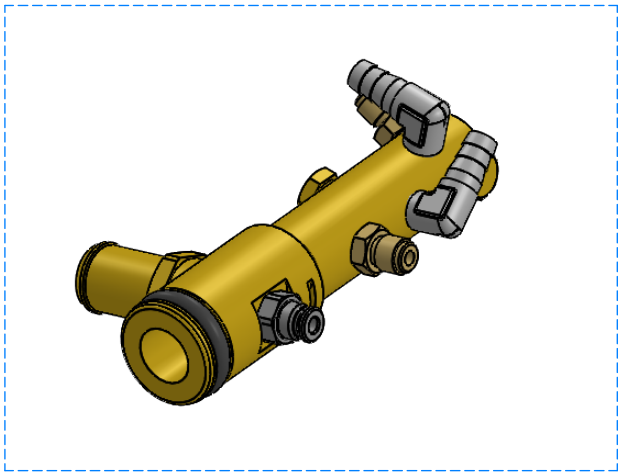

1 GROUP

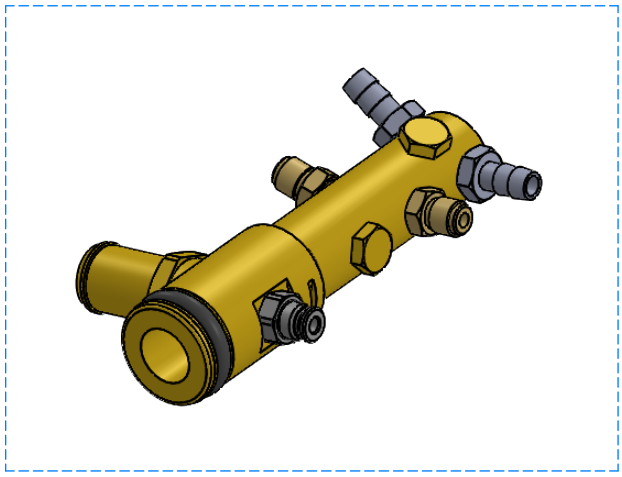

2 GROUPS

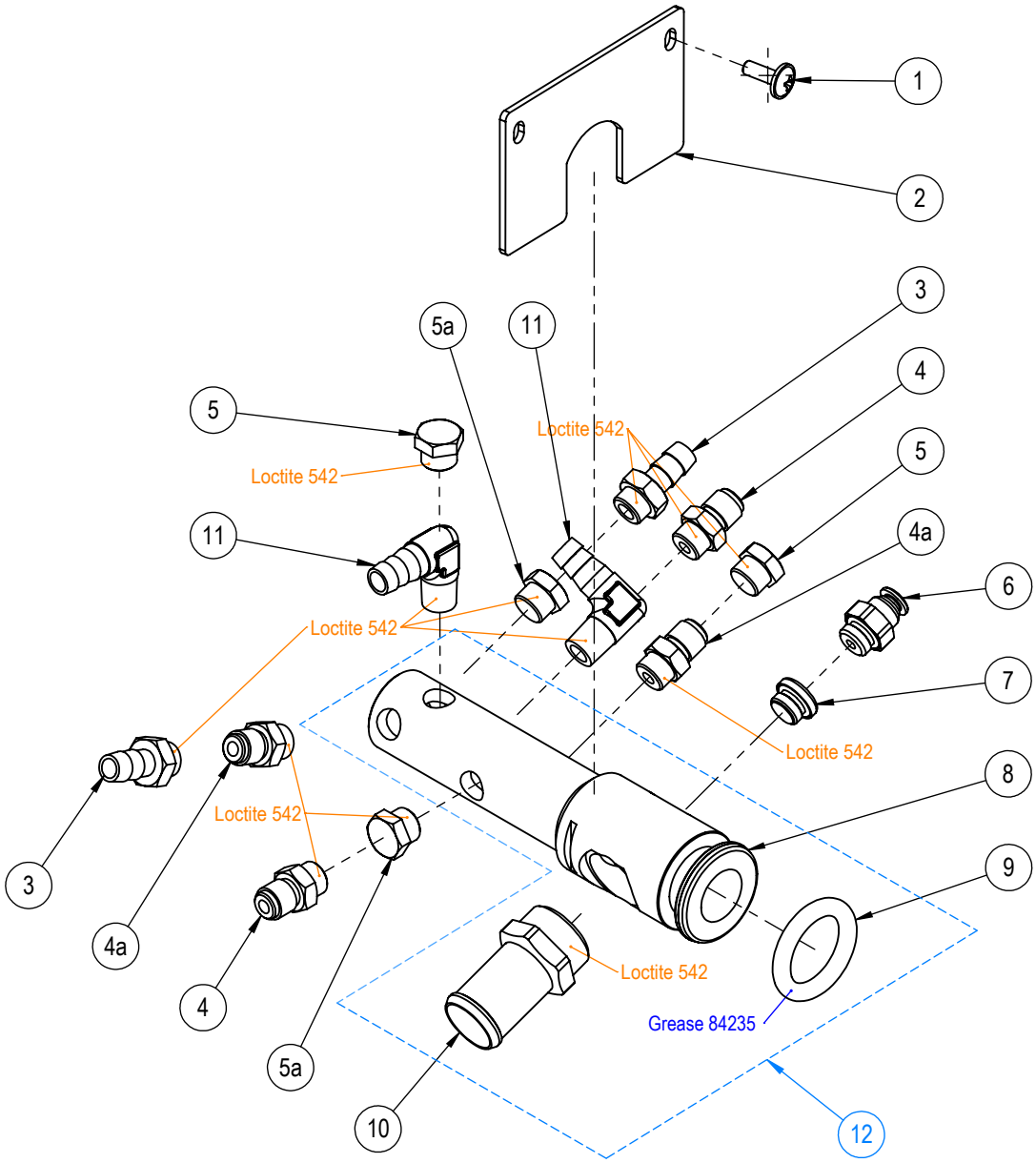

10/23	ENSEMBLE BLOC VIDANGE *CLEANNING DRAIN SET*	366

PLANCHE - PLATE 366

Pos.	Fact. code	Code	Description FR	*Description GB*	V	W&T	REF.	NOTES	S/N BREAK
1	50126	0UN615	VIS TB CRUCIFORME A EMBASE M4 x 12	*CRUCIFORM SCREW M4 x 12*				MOQ = 50	
2	NA2004	0UNJLD	TOLE FIXATION BLOC VIDANGE	*DRAIN BLOCK FIXING SHEET*					
3	21455	0UN912	RACCORD TETINE 1/8M D7	*FITTING 1/8M D7*			a;b;c;d;g;h;j;k;l;m;x;y;z;a1;b1;c1;d1		
4	MI36	0UN422	RACCORD 1/8M 1/8M	*CONNECTION 1/8*			a;b;c;d;g;h;j;k;l;m;x;y;z;a1;b1;c1;d1		
4a	MI36	0UN422	RACCORD 1/8M 1/8M	*CONNECTION 1/8*			e;f;i;n;o;p;q;r;s;t;u;v;w;e1;f1;g1		
5	21100	0UN994	BOUCHON 1/8	*PLUG 1/8*			a;b;c;d;g;h;j;k;l;m;x;y;z;a1;b1;c1;d1		
5a	21100	0UN994	BOUCHON 1/8	*PLUG 1/8*			e;f;i;n;o;p;q;r;s;t;u;v;w;e1;f1;g1		
6	23203	0UNI7Q	RACCORD G1/8 MALE - D4 - INOX	*STAINLESS STEEL FITTING G1/8M D4*			b;d;f;h;i;m;o;q;t;w;z;c1;d1		
7	23000	0UNI7P	BOUCHON G1/8 INOX	*PLUG G1/8 STAINLESS STEEL*			a;c;e;g;j;k;l;n;p;r;s;u;v;x;y;a1;b1;e1;f1;g1		
8	NA4016	0UNJNN	BLOC VIDANGE	*DRAIN BLOCK*					
9	28024	0UNI83	JOINT TORIQUE 5,34X21	*O RING 5,34X21*					
10	FR4211	0UN378	TETINE LATERALE D'EVACUATION	*NIPPLE DISCHARGE SIDE*					
11	21456	0UN566	RACCORD COUDE 1/8M D7	*FITTING 1/8M D7*			e;f;i;n;o;p;q;r;s;t;u;v;w;e1;f1;g1		
12	NA1010	0UNI84	ENSEMBLE BLOC VIDANGE	*DRAIN BLOCK SET*					

Note : No code → unavailable for spare parts

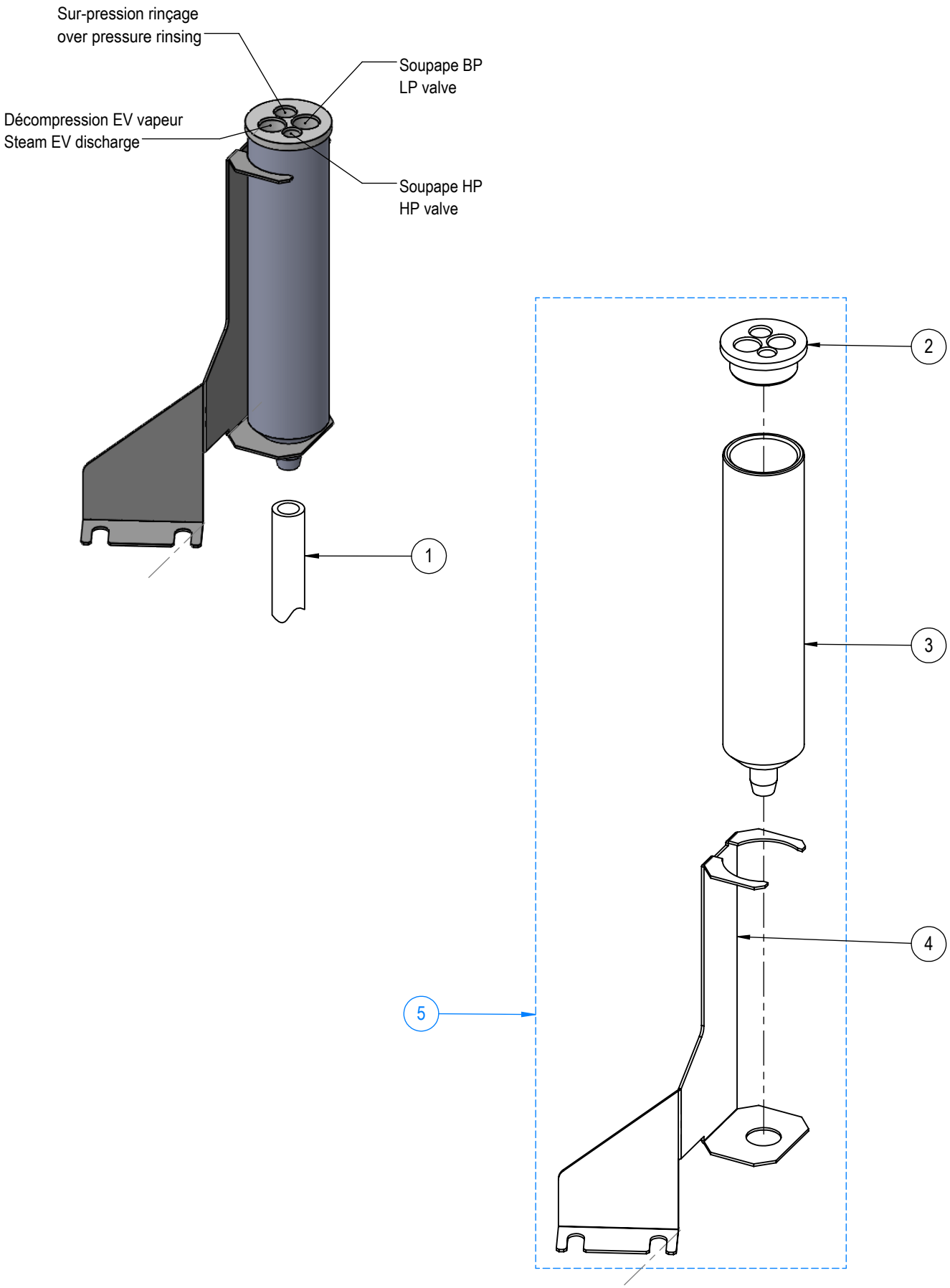

11/22	GOULOTTE D'ÉVACUATION *DRAIN CHUTE*	371

PLANCHE - PLATE 371

Pos.	Fact. code	Code	Description FR	*Description GB*	V	W&T	REF.	NOTES	S/N BREAK
1	12704	0UN041	TUBE SILICONE 7X12	*SILICONE PIPE 7X12*				L : 130 MM	
2	FR4088	0UN903	BOUCHON DE GOULOTTE 4T	*DRAIN CHUTE CAP 4 HOLES*					
3	FR4067	0UN433	GOULOTTE EVACUATION	*DRAIN CHUTE*					
4	NA2007	0UNJNA	SUPPORT GOULOTTE NA	*DRAIN CHUTE HOLDER (NA)*					
5	NA1037	0UNI85	GOULOTTE EVACUATION N.A.	*DRAIN CHUTE FOR TANGO XP*					

Note : No code → unavailable for spare parts

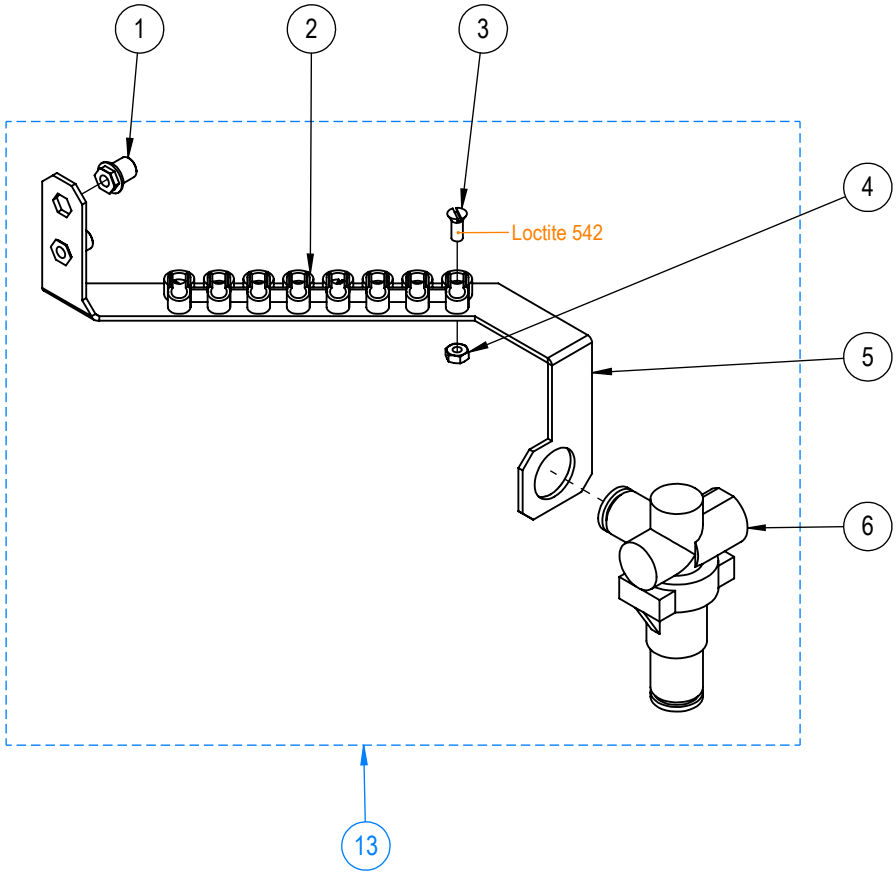

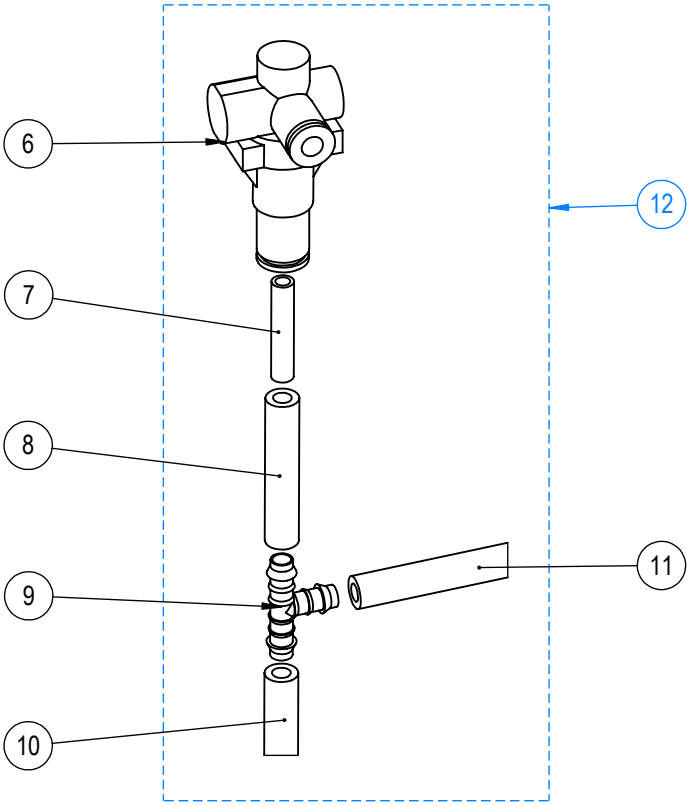

08/24	SUPPORT TUBES *UNITS PIPE HOLDER*	375

PLANCHE - PLATE 375

Pos.	Fact. code	Code	Description FR	*Description GB*	V	W&T	REF.	NOTES	S/N BREAK
1	51065		ECROU A SERTIR M4 INOX	*NUT TO CRIMP M4 STAINLESS STEEL*					
2	25112	0UNJLX	ATTACHE TUBE D4	*FIXING PTFE PIPE*					
3	50003	0UNDJY	VIS TF M3 X 8	*SCREW M3 X 8*					
4	PG49	0UNA45	ECROU INOX Hu DE 3	*NUT M3*					
5	NA2021	0UNJM3	SUPPORT TUBES ET SOUPAPE	*SUPPORT FOR PIPES AND VALVE*					
6	23651	0UNI86	VALVE MULTIFONCTIONS D6- PPSU -	*Multifunction valve D6- PPSU*					
7	NA6501	0UNJDY	12736 DIAM 4-6 L: 1M	*12737 DIAM 4-6 L: 1M*				L : 30 MM	
8	NA6502	0UNJDZ	12740 DIAM 5-9 L: 1M	*12740 DIAM 5-9 L: 1M*				L : 45 MM	
9	23602	0UNJQ6	T DIAMETRE 6	*T DIAMETER 6*					
10	NA6502	0UNJDZ	12740 DIAM 5-9 L: 1M	*12740 DIAM 5-9 L: 1M*				L : 120 MM	
11	NA6502	0UNJDZ	12740 DIAM 5-9 L: 1M	*12740 DIAM 5-9 L: 1M*				L : 280 MM	
12	NA1101	0UNJS3	SOUPAPE HP SOLO	*HP VALVE SOLO*			e;f;i;n;o;p;q;r;s;t;u;v;w;e1;f1;g1		
13	NA1045	0UNJNS	ASM SUPPORT TUBES PTFE	*COMPLETE PTFE PIPE HOLDER*			a;b;c;d;g;h;j;k;l;m;x;y;z;a1;b1;c1;d1		

Note : No code → unavailable for spare parts

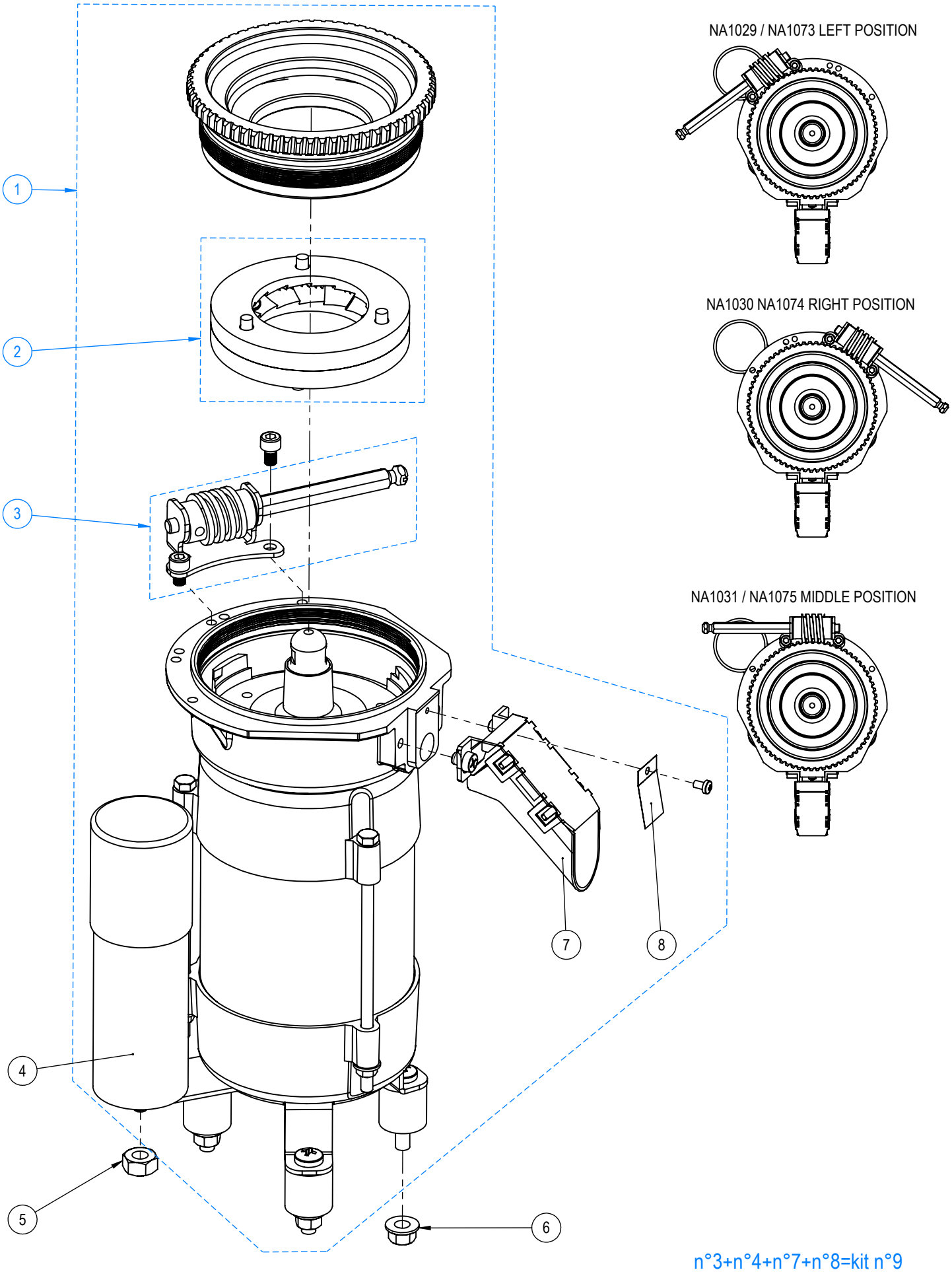

n°3+n°4+n°7+n°8=kit n°9

08/24	MOULIN 84mm *84mm GRINDER*	402

PLANCHE - PLATE 402

Pos.	Fact. code	Code	Description FR	*Description GB*	V	W&T	REF.	NOTES	S/N BREAK
1	NA1029	0UNI87	MOULIN D.84 230/50-60Hz G2	*L2 GRINDER D.84 230/50-60Hz*			a;b;c;d;j;k;l;m;x;y;z;a1;b1;c1;d1		
1	NA1029UL	0UNJS4	MOULIN D.84 220/60Hz G2 UL	*L2 GRINDER D.84 220/60Hz*			g;h		
1	NA1030	0UNI88	MOULIN D.84 230/50-60Hz D2	*R2 GRINDER D.84 230/50-60Hz*			a;b;c;d;j;k;l;m;x;y;z;a1;b1;c1;d1		
1	NA1030UL	0UNJS5	MOULIN D.84 220/60Hz D2 UL	*R2 GRINDER D.84 220/60Hz*			g;h		
1	NA1031	0UNI89	MOULIN D.84 230/50-60Hz C2	*M2 GRINDER D.84 230/50-60Hz*			c;d;k;a1;b1;c1		
1	NA1031UL	0UNJS6	MOULIN D.84 220/60Hz C2 UL	*M2 GRINDER D.84 220/60Hz*			l;m		
1	NA1073	0UNJS7	MOULIN D.84 230/50-60Hz G1	*L1 GRINDER D.84 230/50-60Hz*			e;f;i;r;s;t;u;v;w;e1;f1;g1		
1	NA1073UL	0UNJS8	MOULIN D.84 220/60Hz G1 UL	*L1 GRINDER D.84 220/60Hz*			n;o;p;q		
1	NA1074	0UNJS9	MOULIN D.84 230/50-60Hz D1	*R1 GRINDER D.84 230/50-60Hz*			e;f;i;r;s;t;u;v;w;e1;f1;g1		
1	NA1074UL	0UNJTA	MOULIN D.84 220/60Hz D1 UL	*R1 GRINDER D.84 220/60Hz*			n;o;p;q		
1	NA1075	0UNJTB	MOULIN D.84 230/50-60Hz C1	*M1 GRINDER D.84 230/50-60Hz*			i;u;v;w;e1;f1		
1	NA1075UL	0UNJTC	MOULIN D.84 220/60Hz C1 UL	*M1 GRINDER D.84 220/60Hz*			p;q		
2	37556	0UNJFP	KIT MEULES MOULIN CEADO	*BURRS KIT*					
3	37554	0UNJFN	ASM VIS AJUSTEMENT GAUCHE	*LEFT ADJUSTMENT SCREW*				middle / left grinder	
3	37555	0UNJFO	ASM VIS AJUSTEMENT DROIT	*RIGHT ADJUSTMENT SCREW*				right grinder	
4	37553	0UNJFM	CONDENSATEUR 16µF MOULIN CEADO	*CAPACITOR*			a;b;c;d;e;f;i;j;k;r;s;t;u;v;w;x;y;z;a1;b1;c1;d1;e1;f1;g1		
4	37559	0UNJTP	CONDENSATEUR 25µF UL	*CAPACITOR*			g;h;l;m;n;o;p;q		
5	PE12	0UN430	ECROU M8	*NUT M8*					
6	51155	0UN871	ECROU NYLSTOP M6	*NUT NYLSTOP M6*					
7	37551	0UNJE8	BEC 37°	*COFFEE SPOUT 37°*					
8	37552	0UNJFL	LANGUETTE BEC 37°	*SPOUT TONGUE 37°*					
9	37557	0UNJE5	KIT REGLAGE GAUCHE CEADO D84	*LEFT SETTING KIT CEADO D84*				middle / left grinder	
9	37558	0UNJE6	KIT REGLAGE DROIT CEADO D84	*RIGHT SETTING KIT CEADO D84*				right grinder	

Note : No code → unavailable for spare parts

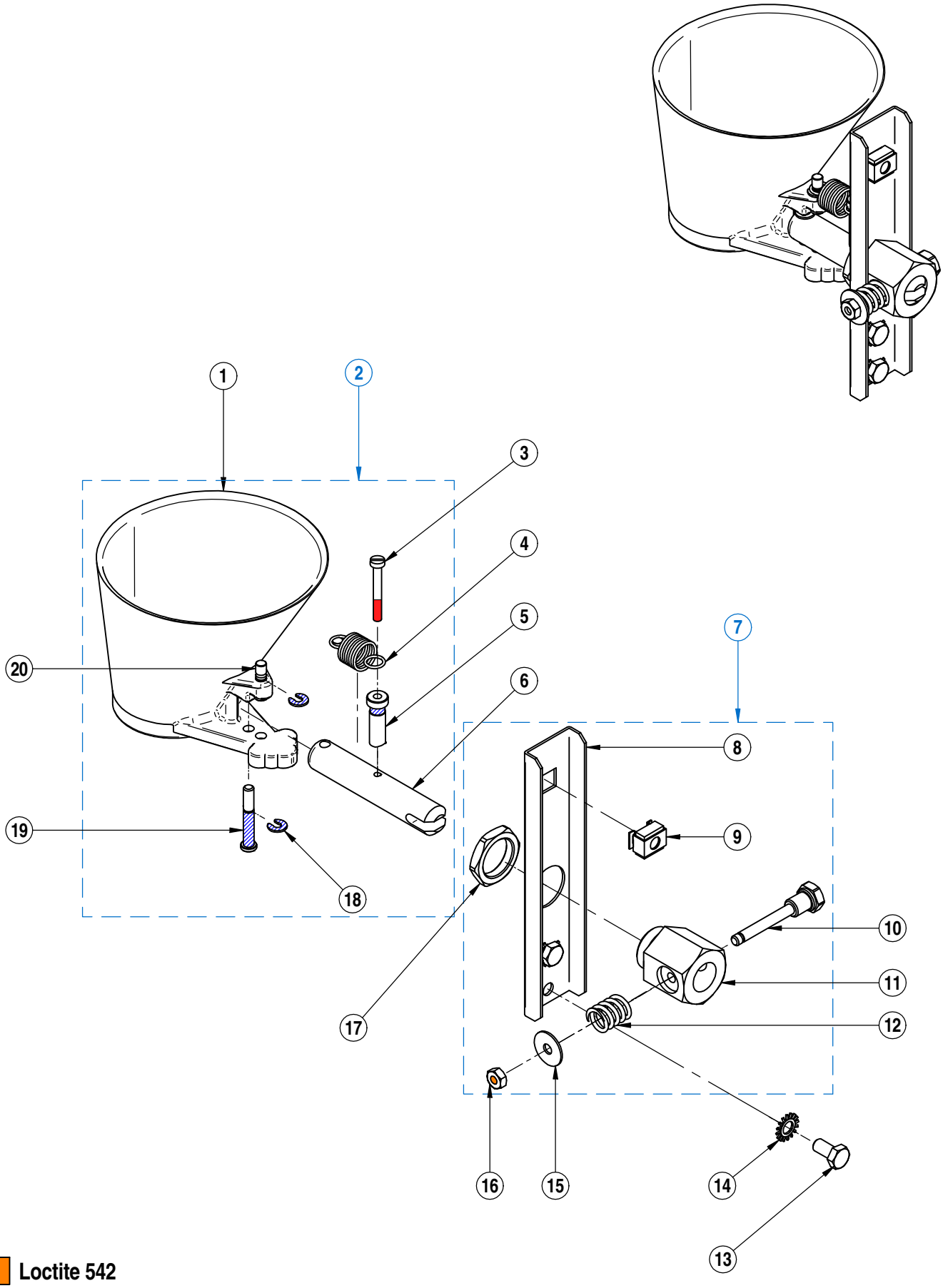

Loctite 542

Loctite 262

Grease 84236

11/22	ENTONNOIR *FUNNEL*	410

PLANCHE - PLATE 410

Pos.	Fact. code	Code	Description FR	*Description GB*	V	W&T	REF.	NOTES	S/N BREAK
1	FR7011	0UN529	ENTONNOIR	*FUNNEL*					
2	FR1006	0UN189	KIT ENTONNOIR PARTIE MOBILE	*FUNNEL MOBILE KIT*			a;b;c;d;g;h;j;k;l;m;x;y;z;a1;b1;c1;d1		
3	CN49	0UNBLO	VIS TC M3X25	*SCREW M3 X 25*					
4	28816	0UN508	RESSORT ENTONNOIR	*FUNNEL SPRING*					
5	FR4048	0UN466	AXE FIXE	*AXLE*					
6	FR4042	0UN440	AXE ENTONNOIR	*HOLDER ROD*					
7	FR1005	0UN770	ENTONNOIR PARTIE FIXE	*FUNNEL FIXED KIT*			a;b;c;d;g;h;j;k;l;m;x;y;z;a1;b1;c1;d1		
8	FR2025	0UNA7I	TOLE SUPPORT ENTONNOIR	*FUNNEL HOLDER*					
9	52506	0UN279	ECROU CAGE M6 X ep 1	*INSERT NUT M6*					
10	FR4040	0UN584	AXE DE VERROUILLAGE ENTONNOIR	*LOCKING ROD*					
11	FR4043	0UN470	CORPS SUPPORT ENTONNOIR	*FUNNEL HOLDER BODY*					
12	PA43	0UN199	RESSORT F15/10 L14,5 D10,5 P3	*SPRING*					
13	50204	0UN982	VIS TH M5 x 10 INOX	*SCREW M5 X 10*					
14	CN344	0UNA44	RONDELLE EVENTAIL DE 5	*LOCK WASHER 5*					
15	51552	0UN616	RONDELLE INOX 4.25x14x0.8	*S..STEEL WASHER 4.25x14x0.8*					
16	PG14	0UN277	ECROU M4	*NUT M4*					
17	NA18A	0UN698	ECROU LAITON 3/8 4 mm	*3/8 NUT*					
18	PH31	0UN289	ANNEAU TRUARC	*TRUARC RING*					
19	FR4045	0UN553	AXE DE ROTATION ENTONNOIR	*ROTATING AXLE*					
20	FR4047	0UN471	AXE MOBILE	*AXLE*					

Note : No code → unavailable for spare parts

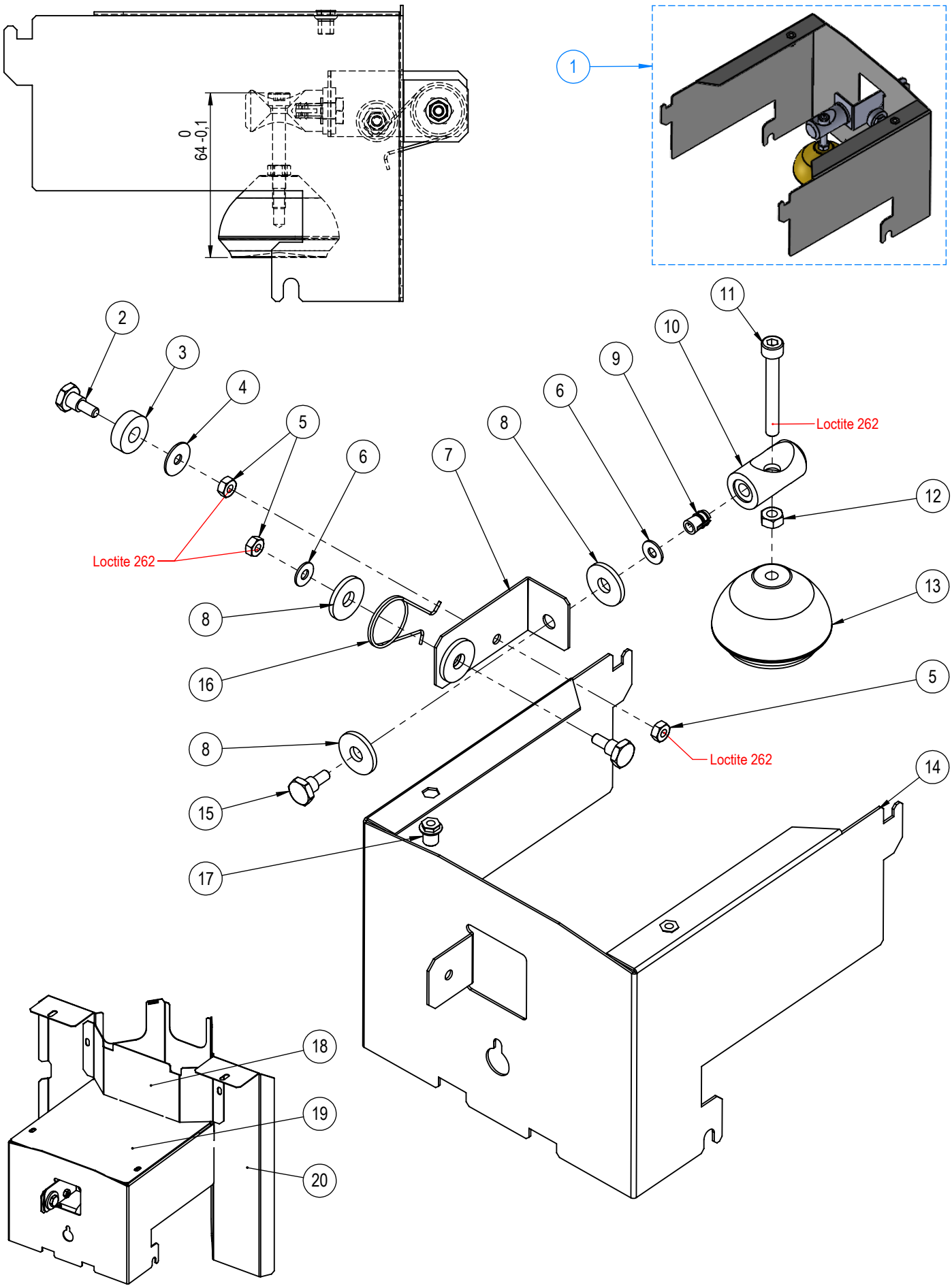

01/24	ENSEMBLE NETTOYEUR *CLEANING DEVICE*	417

PLANCHE - PLATE 417

Pos.	Fact. code	Code	Description FR	*Description GB*	V	W&T	REF.	NOTES	S/N BREAK
1	NA1038	0UNI9A	ENSEMBLE BALANCIER	*PENDULUM KIT*			a;b;c;d;g;h;j;k;l;m;x;y;z;a1;b1;c1;d1		
2	FR4072	0UN310	VIS EPAULEE M4	*SCREW M4*					
3	PA77	0UN527	JOINT 6,5 x 16 x 5	*GASKET 6,5 X 16 X 5*					
4	51552	0UN616	RONDELLE INOX 4.25x14x0.8	*S..STEEL WASHER 4.25x14x0.8*					
5	PG14	0UN277	ECROU M4	*NUT M4*					
6	PG15B	0UNA3S	RONDELLE INOX 4.2X10X0.8	*WASHER*					
7	FR2045	0UN609	EQUERRE SUPPORT NETTOYEUR	*RIGHT ANGLE BRACKET*					
8	51650	0UN297	RONDELLE 6 6.4x18x2 NYLON	*WASHER DIAM. 6 NYLON*					
9	51355	0UN341	INSERT M4D LAITON L:9.5	*INSERT M4*					
10	FR4071	0UN487	AXE SUPPORT BOULE NETTOYEUR	*CLEANING BALL AXLE*					
11	50203	0UN273	VIS CHC M5 X 45 INOX	*SCREW M5 X 40*					
12	51100	0UNA5V	ECROU M5 INOX	*NUT M5*					
13	FR4070	0UN916	BOULE NETTOYEUR	*CLEANING BALL*					
14	NA2017	0UNJNF	SUPPORT BALANCIER NEXT GEN	*SUPPORT SHEET OUTRIGGER*					
15	FR4072	0UN310	VIS EPAULEE M4	*SCREW M4*					
16	51650	0UN297	RONDELLE 6 6.4x18x2 NYLON	*WASHER DIAM. 6 NYLON*					
17	51065		ECROU A SERTIR M4 INOX	*NUT TO CRIMP M4 STAINLESS STEEL*					
18	NA2032	0UNJLV	CLOISONNEMENT AVANT BECS	*SPOUTS PARTITIONING*					
19	NZ2033	0UNFZB	SUPPORT GRILLES DE BASSINE 3GR	*GRID SUPPORT 3 UNITS*					
20	NA2002	0UNJNC	TOLE PROTECTION MOULINS	*GRINDERS PROTECTION SHEET*					

Note : No code → unavailable for spare parts

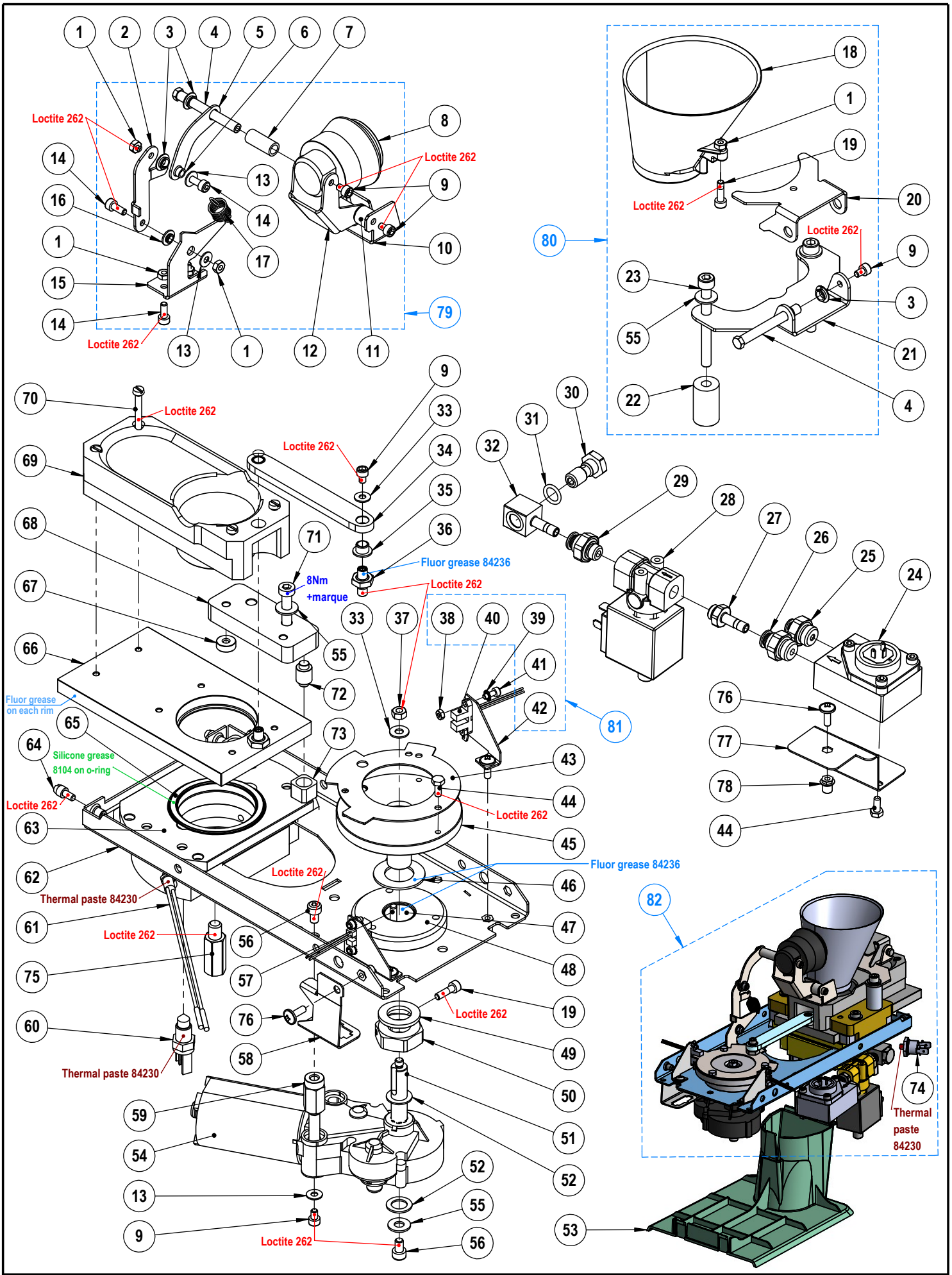

10/24	**MONOGROUPE CAFE** *COFFEE MONOGROUP*	422

PLANCHE - PLATE 422

Pos.	Fact. code	Code	Description FR	*Description GB*	V	W&T	REF.	NOTES	S/N BREAK
1	PG14	0UN277	ECROU M4	*NUT M4*					
2	NA2055		CAMPANILE	*CAMPANILE*					
3	52603		PALIER IGUS A CLIPS MCM 06 _015_13	*GLIDING RING*					
4	NA4046		AXE MONOGROUPE	*AXLE*					
5	NA2054		BIELLE DE CLOCHE	*CONNECTING ROD*					
6	NA4051		ENTRETOISE CYLINDRIQUE	*CYLINDER SPACER*					
7	NA4047		ENTRETOISE POM LONGUE	*LONG SPACER*					
8	NA4058		CLOCHE - MONOGROUPE	*BELL*					
9	50106	0UN932	VIS TCHc M4 x 6	*SCREW M4 X 6*					
10	NA2059		TOLE PIVOT DE BRAS	*ARM SHEET METAL*					
11	NA4048		ENTRETOISE POM COURTE	*SHORT SPACER*					
12	NA2053		BRAS DE CLOCHE	*BELL ARM*					
13	PG15B	0UNA3S	RONDELLE INOX 4.2X10X0.8	*WASHER*					
14	PE59	0UN201	VIS TCHC M4x10 INOX	*SCREW 4 X 10*					
15	NA2060		SOCLE DU CAMPANILE	*BASE*					
16	NA4049		ENTRETOISE EPAULEE	*SHOULDERED SPACER*					
17	28816	0UN508	RESSORT ENTONNOIR	*FUNNEL SPRING*					
18	FR7011	0UN529	ENTONNOIR	*FUNNEL*					
19	50128		VIS TChc M4 X 12 8-8	*TCHC M4 X 12 8-8*					
20	NA2063		PATTE DE L'ENTONNOIR	*FUNNEL LEG*					
21	NA2056		SUPPORT D'ENTONNOIR	*FUNNEL SUPPORT*					
22	NA4075		ENTRETOISE	*SPACER*					
23	CN50	0UNDTE	VIS TCHC M6 x 60 inox A2	*SCREW M6 x 60 STAINLESS STEEL TCHC*					
24	CN648	0UN109	COMPTEUR VOLUMETRIQUE Ø1,5	*WHOLE W.DOSING DEVICE*					
25	23202	0UNI7V	RACCORD G1/4 MALE - D4 - INOX	*STAINLESS STEEL FITTING G1/4M D4*					
26	23252		RACCORD G1/4 MALE - D6 - INOX	*STAINLESS STEEL FITTING G1/4M D6*					
27	23254		RACCORD G1/8 MALE - TIGE D6 - INOX	*G1/8 MALE FITTING - D6 ROD - SS*					
28	35025	0UN129	EV 3 VOIES 24V D1.2	*EV 3 WAYS 24V D1.2*					
29	23259	0UNJC6	RACCORD G1/8 MALE - D6 - INOX	*STAINLESS STEEL FITTING G1/8M D6*					
30	23751	0UN088	AXE DE BANJO 1/8	*BANJO SCREW*					
31	28104	0UN146	JOINT TORIQUE 2X9,5 FKM 80SH	*GASKET 2X9,5*					
32	NA4066		BANJO EV CAFE DU MONOGROUPE	*COFFEE ELECTROVALVE FITTING*					
33	51600	0UNDLL	RONDELLE INOX MOYENNE DE 5	*WASHER*					
34	NA4044		BIELLE 91 mm	*ARM*					
35	52602	0UNDLT	PALIER A COLERETTE D6	*LOWER GLIDING RING D6*					
36	NA4059		MANETON - MONOGROUPE	*CRANKPIN*					
37	51100	0UNA5V	ECROU M5 INOX	*NUT M5*					
38	PG49	0UNA45	ECROU INOX Hu DE 3	*NUT M3*					
39	CN342	0UNA3L	RONDELLE EVENTAIL 3	*WASHER 3*					
40	36500	0UN163	CAPTEUR A FOURCHE EFFET HALL	*FORK SENSOR*					
41	CN306	0UN997	VIS INOX TCHC 3 x 8	*SCREW M3 X 8*					
42	NA2058		SUPPORT DE CAPTEUR A FOURCHE D	*RIGHT FORK SENSOR BRACKET*					
42	NA2057		SUPPORT DE CAPTEUR A FOURCHE G	*LEFT FORK SENSOR BRACKET*					
43	NA2051		TOLE CODEUSE	*CODER SHEET METAL*					
44	50118	0UNA64	VIS TH M4X10 INOX	*S.STEEL SCREW M4X10*					
45	NA4055		ROUE - MONOGROUPE	*WHEEL*					
46	53618		RONDELLE IGUS XTM-18-32-015	*IGUS WASHER XTM-18-32-015*					
47	52618		PALIER A COLERETTE J350FM-1820-17	*FLANGE BEARING J350FM-1820-17*					
48	NA4054		PALIER - MONOGROUPE	*BEARING*					
49	NA4076		RONDELLE LAITON	*BRASS WASHER*					
50	NA4078		ECROU DE REGLAGE M15 X 1	*ADJUSTING NUT M15 X 1*					
51	NA4071IN		AXE MOTEUR 405228	*MOTOR AXLE 405228*					
52	CS4023	0UNDU9	RONDELLE PEEK SUPERIEURE	*UPPER PEEK WASHER*					
53	NA7039	0UNJK5	TUNNEL MONOGROUPE	*MONOGROUP FUNNEL*					
54	37308	0UN516	MOTOREDUCTEUR 24V 500tr/mn	*MOTOREDUCER 24V 500 rpm*					
55	PH32	0UN278	RONDELLE ACIER Zn 6,25x14x1,2	*WASHER*					
56	PH53	0UNG9K	VIS ST M6x8 LAITON	*SCREW M6 X 8*					
57	52904		GOUPILLE INOX Ø 4 x 16	*STAINLESS STEEL PIN Ø 4 x 16*					
58	NA2038		TOLE CABLE MONOGROUPE	*MONOGROUP WIRE SHEET METAL*					
59	NA4070		PION SUPPORT MOTEUR	*ENGINE SUPPORT PIN*					
60	34410	0UN117	SONDE THERMOSTATIQUE	*THERMOSTATIC PROBE*					
61	29831	0UN032	CARTOUCHE CHAUFFANTE 200W-230V	*HEATING ELEMENT 200W-230V*					
62	NA2050		MONOGROUPE TOLE SUPPORT	*SHEET METAL MONOGROUP SUPPORT*					
63	NA4050		CORPS - MONOGROUPE	*BODY*					
64	FR4056	0UN462	VIS SPECIAL COTE	*SIDE SCREW*					
65	28503	0UN582	JOINT PLATEAU COMPLET	*GASKET UNIT*					
66	NA4052		PLATEAU - MONOGROUPE	*TRAY*					
67	28502	0UN974	BUTEE PLATEAU	*BASE DIA: 12*					
68	NA4053		DEMI-LUNES - MONOGROUPE	*HALF MOON*					
69	NA4077		SUPPORT DE CLOCHE A RETENTION	*RETENTION BELL SUPPORT*					
70	50120	0UN757	VIS TC M4X35 INOX	*S.STEEL SCREW M4X35*					
71	PC22	0UNG7M	VIS ACIER CHC 6 x 35 INOX	*SCREW 6 X 35*					
72	NA4064		ENTRETOISE PALIER CARRE	*SPACER*					
73	31934	0UNBJF	PALIER CARRE	*SQUARE SOFT BEARING*					
74	34210	0UN105	SECURITE THERMIQUE température 115°C	*SAFETY THERMOSTAT 115°C*					
75	FR4029	0UN468	ENTRETOISE M8	*SCREW M8*					
76	50126	0UN615	VIS TB CRUCIFORME A EMBASE M4 x 12	*CRUCIFORM SCREW M4 x 12*				MOQ = 50	
77	NA2062		SUPPORT DE DOSEUR	*DOSING HOLDER*					
78	51065		ECROU A SERTIR M4 INOX	*NUT TO CRIMP M4 STAINLESS STEEL*					
79	NA1082	0UNJTS	ENSEMBLE BOULIER SOLO	*EJECTOR SET SOLO*			e;f;i;n;o;p;q;r;s;t;u;v;w;e1;f1;g1		
80	NA1081	0UNJTT	ENSEMBLE ENTONNOIR SOLO	*FUNNEL SET SOLO*			e;f;i;n;o;p;q;r;s;t;u;v;w;e1;f1;g1		
81	NA1094	0UNJQ7	ASM CAPTEUR EFFET HALL GAUCHE	*LEFT SENSOR MONOGROUP*			e;f;i;n;o;p;q;r;s;t;u;v;w;e1;f1;g1		
81	NA1096	0UNJQ8	ASM CAPTEUR EFFET HALL DROITE	*RIGHT SENSOR MONOGROUP*			e;f;i;n;o;p;q;r;s;t;u;v;w;e1;f1;g1		
82	NA1080	0UNJI0	GROUPE CAFE SOLO	*COFFEE GROUPE SOLO*			e;f;i;n;o;p;q;r;s;t;u;v;w;e1;f1;g1		

Note : No code → unavailable for spare parts

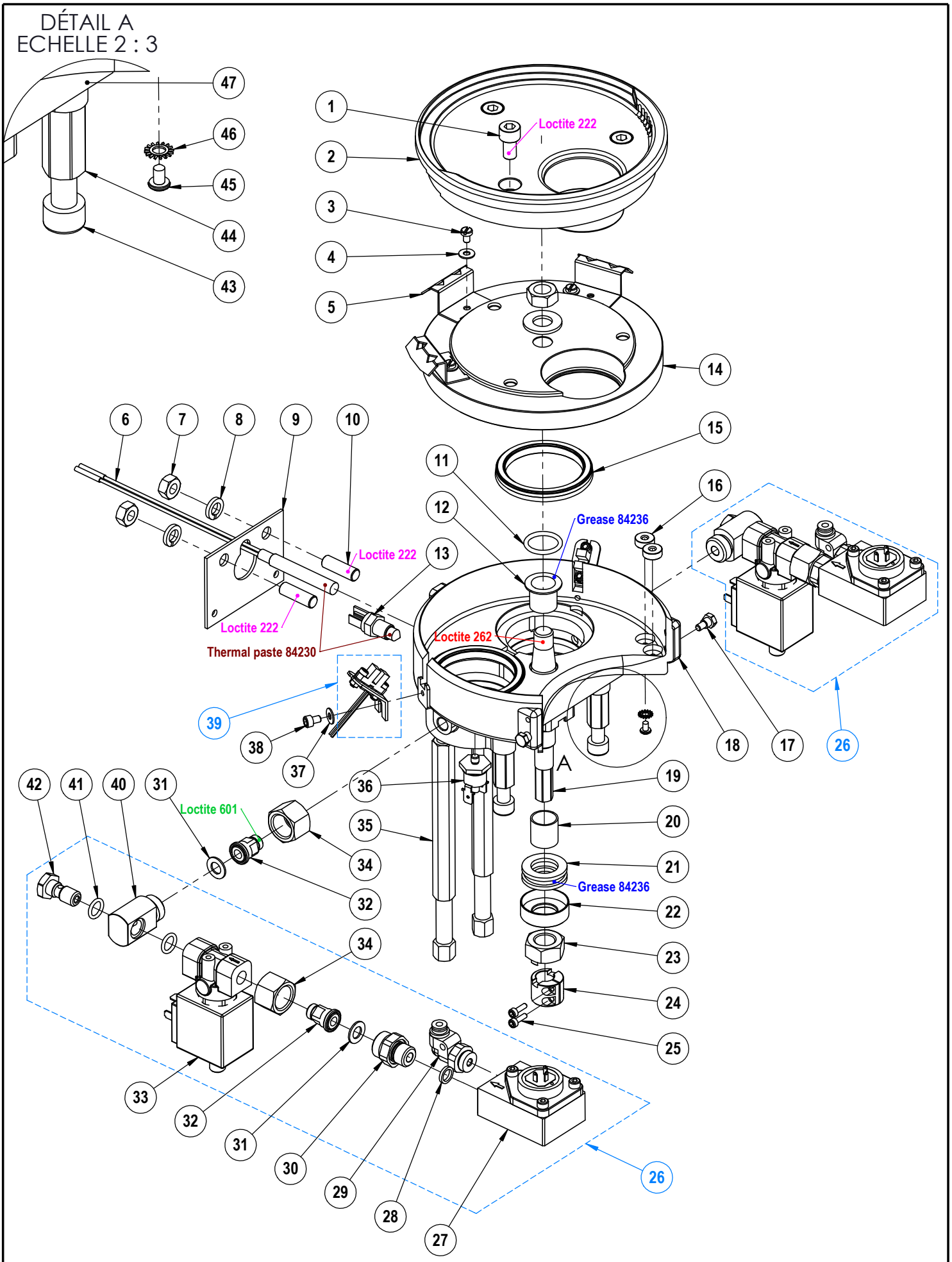

09/24	**GROUPE CAFE SANS PISTON (2GR)** *COFFEE UNIT WITHOUT PISTON (2GR)*	423

PLANCHE - PLATE 423

Pos.	Fact. code	Code	Description FR	*Description GB*	V	W&T	REF.	NOTES	S/N BREAK
1	50414	0UNJK8	VIS CHC M8 X 14	*SCREW M8 X 14*					
2	FR7000	0UN214	PLATEAU PLASTIQUE	*PLASTIC TURNTABLE*					
3	CN325	0UN284	VIS INOX TC 4 x 6	*SCREW M4 X 6*					
4	PG15B	0UNA3S	RONDELLE INOX 4.2X10X0.8	*WASHER*					
5	FR2082	0UNA9D	TOLE POSITION PLATEAU LARGE	*WIDE TURNABLE TOP PLATE*					
6	29831	0UN032	CARTOUCHE CHAUFFANTE 200W-230V	*HEATING ELEMENT 200W-230V*					
7	E11		ECROU ACIER Hu de 8	*NUT M8*					
8	RR83	0UN592	RONDELLE GROVER DE 8	*WASHER 8*					
9	FR2021	0UNA7G	TOLE ENTRETOISE 2 mm	*PLATE*					
10	CF335A	0UN926	VIS INOX STHC 8 X 25	*SCREW M8x25 STAINLESS STEEL*					
11	PH77	0UN097	JOINT TORIQUE 18.72 x 2.62	*O-RING 18.72 X 2,62*					
12	52615	0UN530	COUSSINET XFM-15-17-17	*BEARING XFM 1517-15*					
13	34410	0UN117	SONDE THERMOSTATIQUE	*THERMOSTATIC PROBE*					
14	FR4002	0UN434	PLATEAU INOX	*STAINLESS STEEL TURNTABLE*					
15	28503	0UN582	JOINT PLATEAU COMPLET	*GASKET UNIT*					
16	28502	0UN974	BUTEE PLATEAU	*BASE DIA: 12*					
17	NA4028	0UNJLK	VIS EPAULEE GROUPE CAFE	*COFFEE GROUP SHOULDER SCREW*					
18	FR4000	0UN319	CORPS DE GROUPE	*UNIT BODY*					
19	FR4011	0UNBLZ	AXE PLATEAU	*TURNABLE AXLE*					
20	52620	0UN533	PALIER LISSE XSM 1517-15	*BEARING XSM 1517-15*					
21	53117	0UN517	BUTEE A BILLE 51102 d28xd15x9	*THRUST BALL BEARING 28X15X16*					
22	FR4019	0UN469	PROTECTION BUTEE A BILLE	*BEARING COVER*					
23	FR4012	0UN479	ECROU A TETONS	*BREAST NUT*					
24	FR4013	0UN455	BAGUE DE BLOCAGE	*BLOCKING RING*					
25	50000	0UN174	VIS TCHC M3 X 10	*SCREW M3 X 10*					
26	NA1028	0UNJHG	ASM EV CAFE DUO	*SUB ASSEMBLY COFFEE EV*					
27	CN648	0UN109	COMPTEUR VOLUMETRIQUE Ø1,5	*WHOLE W.DOSING DEVICE*					
28	DV172	0UN500	JOINT PLAT 11.4 X 7.5 X 1.9	*GASKET*					
29	23622	0UNJM1	RACCORD COUDÉ G1/4 male D4	*90° elbow adaptor G1/4 male D4*					
30	NA4024	0UNJLR	RACCORD DOSEUR	*FITTING DOSING*					
31	CH16	0UN177	JOINT CUIVRE RECUIT 3/8	*WASHER - COPPER - 3/8*					
32	DO74	0UN416	RACCORD SOUPAPE HP	*H.P VALVE CONNECTION*					
33	35025	0UN129	EV 3 VOIES 24V D1.2	*EV 3 WAYS 24V D1.2*					
34	PB21	0UN488	ECROU 3/8 LAITON	*FITTING 3/8*					
35	FR4030	0UN100	VIS TH M8 X 20 L 180	*SCREW M8 X 20 L:180*					
36	34210	0UN105	SECURITE THERMIQUE température 115°C	*SAFETY THERMOSTAT 115°C*					
37	PG15B	0UNA3S	RONDELLE INOX 4.2X10X0.8	*WASHER*					
38	50106	0UN932	VIS TCHc M4 x 6	*SCREW M4 X 6*					
39	FR1516	0UNHTR	ENSEMBLE CAPTEUR A FOURCHE	*SENSOR KIT*					
40	NA4027	0UNJLP	RACCORD GROUPE	*FITTING GROUP*					
41	28134NSF	0UNJC7	JOINT TORIQUE 2 X 9.5 PERTEC	*O RING 2X9,5*					
42	23751	0UN088	AXE DE BANJO 1/8	*BANJO SCREW*					
43	CN51	0UNDTF	VIS INOX TCHC 8 x 20	*SCREW M8 X 20*					
44	FR4029	0UN468	ENTRETOISE M8	*SCREW M8*					
45	50702	0UN243	VIS TOLE TC INOX N°6 X 6.4	*SCREW*					
46	CN343	0UNA3M	RONDELLE EVENTAIL 4	*WASHER 4*					
47	FR2034	0UNA7K	DEFLECTEUR EJECTION	*EJECTION PLATE*					
48	FR1550	0UN225	KIT JOINT PLATEAU	*PLATE GASKETS KIT*					
49	FR1560	0UN001	KIT REFECTION GROUPE TANGO	*TANGO GROUP REBUILT KIT*			a;b;c;d;g;h;j;k;l;m;x;y;z;a1;b1;c1;d1		

Note : No code → unavailable for spare parts

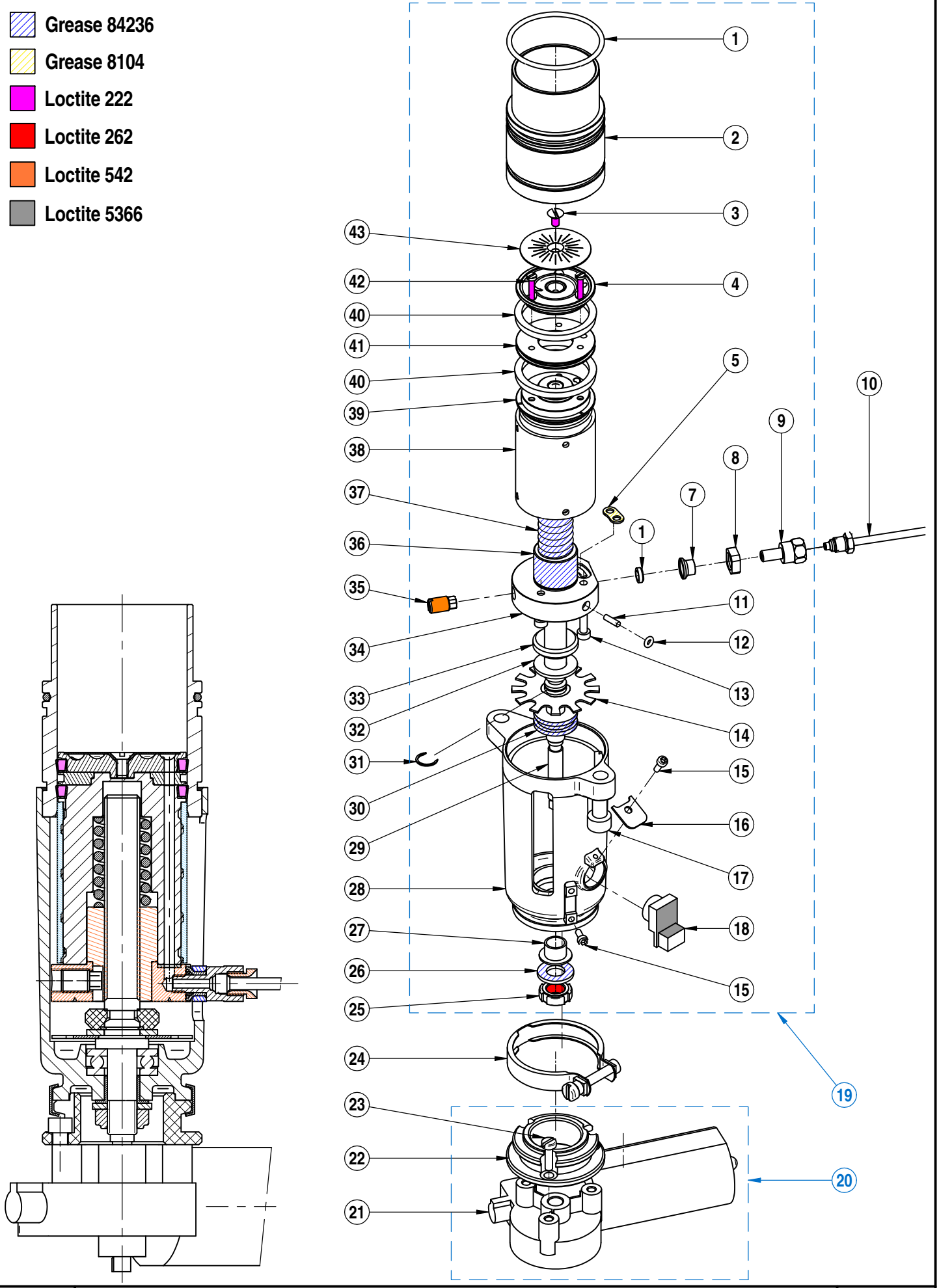

11/22	PISTON COMPLET *PISTON DEVICE*	425

PLANCHE - PLATE 425

Pos.	Fact. code	Code	Description FR	*Description GB*	V	W&T	REF.	NOTES	S/N BREAK
1	27820	0UN496	JOINT TORIQUE 2,62 X 47.29 EPDM	*GASKET 2.62 X 47.29 EPDM*					
2	FR4021	0UN547	CHEMISE	*INFUSION CHAMBER*					
3	CN128	0UNA7E	VIS INOX TF M4 X 8	*SCREW M4 X 8*					
4	FR4126	0UN410	PIECE SUPERIEURE	*UPPER PART*					
5	FR4127	0UN332	JOINT HARICOT	*FLAT SEAL*					
6	28510	0UN308	JOINT PLAT DE SORTIE CAFE	*FLAT GASKET*					
7	FR4017	0UN484	ENTRETOISE DE CLAVETTE	*COTTER SPACER*					
8	FR4018	0UN246	CLAVETTE AUTOLUBRIFIANTE	*SELF-LUBRICATING COTTER*					
9	FR4025	0UN463	SORTIE CAFE	*COFFEE OUTLET SCREW*					
10	FR6520	0UN024	TUBE CAFE lg 238 mm	*COFFEE PIPE length 238 mm*					
11	DO54	0UNA1A	AIMANT DIAM 3 L:10mm	*MAGNET DIA:3 L:10mm*					
12	TC80	0UN211	JOINT TORIQUE 1,78X2,90 FKM	*GASKET 1.78X2.90 FKM*					
13	CN489	0UNA09	VIS INOX CHC 4 x 16	*SCREW M4 X 16*					
14	FR2030	0UNA9E	ROUE CODEUSE ACIER ZINGUE	*CODING WHEEL*					
15	CN306	0UN997	VIS INOX TCHC 3 x 8	*SCREW M3 X 8*					
16	FR2028	0UNA9F	TOLE BRIDE	*SENSOR HOLDER*					
17	CN51	0UNDTF	VIS INOX TCHC 8 x 20	*SCREW M8 X 20*					
18	36501	0UN111	CAPTEUR Ø16	*SENSOR Ø16*					
19	FR1010	0UN020	ASM PISTON SANS MOTEUR (FILTRE 33419)	*PISTON ASSEMBLY W/O MOTOR (FILTER 33419)*			e;f;i;r;s;t;u;v;w;e1;f1;g1		
19	FR1070	0UNHTS	ASM PISTON SANS MOTEUR (FILTRE 33447)	*PISTON ASSEMBLY W/O MOTOR (FILTER 33447)*					
19	FR1081	0UNJU6	ASM PISTON SANS MOTEUR (FILTRE 33448)	*PISTON ASSEMBLY W/O MOTOR (FILTER 33448)*			n;o;p;q		
20	FR1011	0UN110	ENSEMBLE MOTEUR PISTON	*PISTON MOTOR ASSEMBLY*					
21	37305	0UN516	MOTOREDUCTEUR 24V 500tr/mn	*MOTOREDUCER 24V 500 rpm*					
22	FR4028	0UN512	COLERETTE DE FIXATION	*PLASTING RING*					
23	PE66	0UN452	VIS TC M5 X 16 INOX	*SCREW M5 X 16*					
24	37219	0UNBY9	COLLIER POUR POMPE FLUIDOTECH	*CLAMP*					
25	51250	0UN958	ECROU M10 X 75	*NUT M10 X 75*					
26	51751	0UN450	RONDELLE 10.2 X 20 X 2	*WASHER 10*					
27	52610	0UN505	COUSSINET XFM 10-12-9	*BEARING 10-12-9*					
28	FR4020	0UN290	SUPPORT MOTEUR	*MOTOR HOLDER*					
29	FR4023	0UN583	AXE DU PISTON	*PISTON AXLE*					
30	53110	0UN340	BUTEE A BILLE 51100 d24xd10x9	*THRUST BALL BEARING 24X10X9*					
31	52812	0UN581	ANNEAU DIAM 12 EP 0,6	*RING DIAM 12 EP 0,6*					
32	51800	0UN459	RONDELLE 12 X 24 X 2 INOX	*WASHER 12*					
33	FR4031	0UN506	BUTEE PLASTIQUE	*THRUST*					
34	FR4124	0UN411	RONDELLE SORTIE CAFE	*COFFEE OUTLET RING*					
35	FR4032	0UN521	VIS TETON M8 X 100	*SCREW M8 X 100*					
36	FR4027	0UN281	ECROU Tr 12 X 3	*NUT TR 12 X 3*					
37	28820	0UN913	RESSORT ACIER d19.20 X L40 Df:3.2	*SPRING Do:19.20 X df:3.2 Lo:40*					
38	FR4134	0UN300	BAGUE PTFE	*RING PTFE*					
39	FR4122	0UN317	PISTON	*PISTON*					
40	28500	0UN552	JOINT A LEVRE PISTON Ø37.5	*GASKET Ø 37.5*					
41	FR4123	0UN293	RONDELLE INTERMEDIAIRE PISTON	*PISTON GASKET*					
42	CN30	0UN685	VIS INOX TC 3 x 16	*SCREW M3 X 16*					
43	33419	0UN990	FILTRE CAFE 24 - 180 STANDARD	*COFFEE FILTER 24 -180 STANDARD*			e;f;i;r;s;t;u;v;w;e1;f1;g1		
43	33447	0UNA1F	FILTRE CAFE 1 TASSE 24 FENTES SELF	*COFFEE FILTER 1 CUP 24 SLOTS SELF*					
43	33448	0UN139	FILTRE CAFE 48 FENTES EXPORT	*COFFEE FILTER 48 SLOTS EXPORT*			n;o;p;q		

Note : No code → unavailable for spare parts

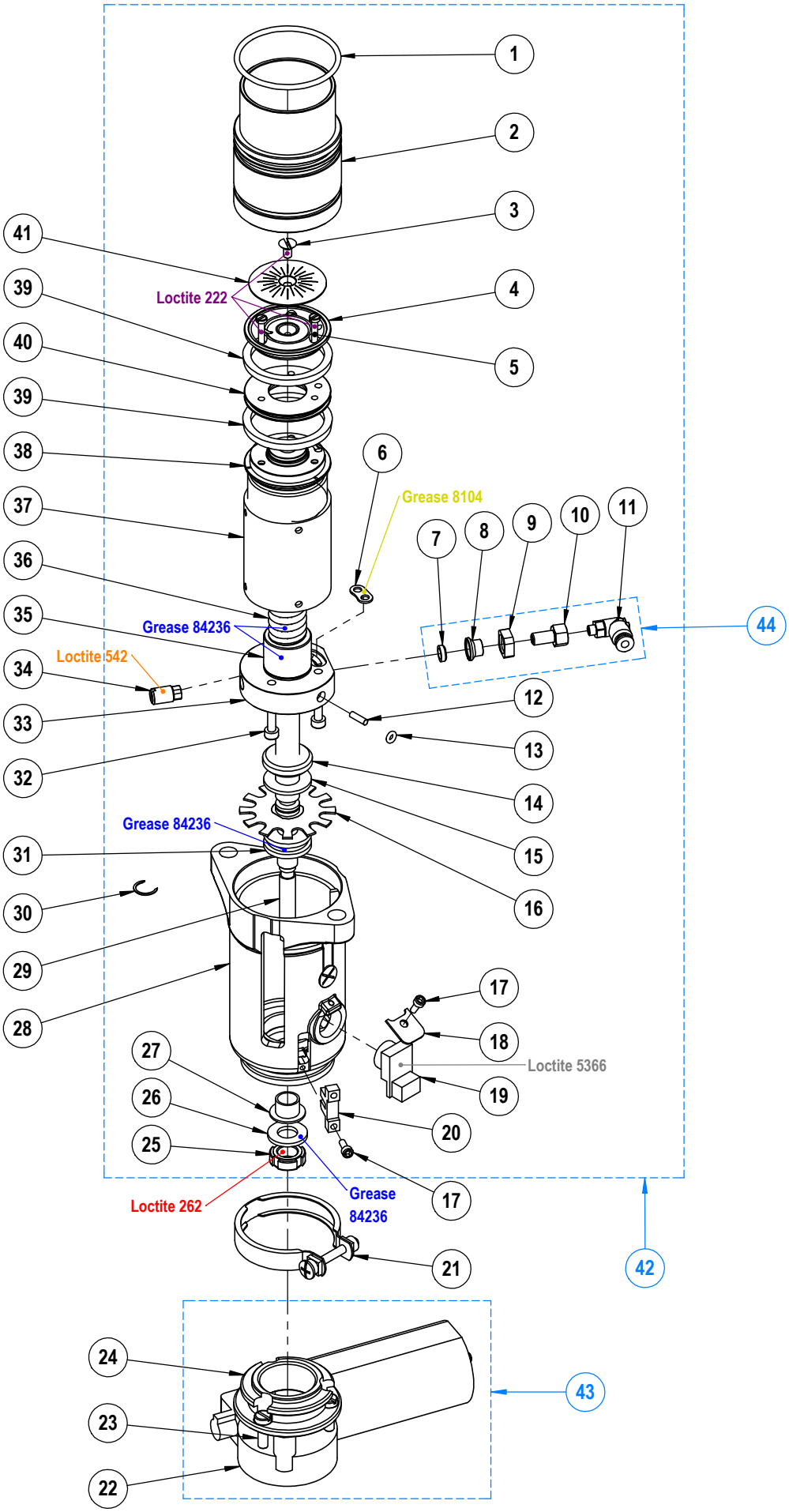

09/24	**PISTON COMPLET NEXT GEN** *COMPLETE DEVICE*	426

PLANCHE - PLATE 426

Pos.	Fact. code	Code	Description FR	*Description GB*	V	W&T	REF.	NOTES	S/N BREAK
1	27820	0UN496	JOINT TORIQUE 2,62 X 47.29 EPDM	*GASKET 2.62 X 47.29 EPDM*					
2	FR4021	0UN547	CHEMISE	*INFUSION CHAMBER*					
3	CN128	0UNA7E	VIS INOX TF M4 X 8	*SCREW M4 X 8*					
4	FR4126	0UN410	PIECE SUPERIEURE	*UPPER PART*					
5	CN30	0UN685	VIS INOX TC 3 x 16	*SCREW M3 X 16*					
6	FR4127	0UN332	JOINT HARICOT	*FLAT SEAL*					
7	28510	0UN308	JOINT PLAT DE SORTIE CAFE	*FLAT GASKET*					
8	FR4017	0UN484	ENTRETOISE DE CLAVETTE	*COTTER SPACER*					
9	FR4018	0UN246	CLAVETTE AUTOLUBRIFIANTE	*SELF-LUBRICATING COTTER*					
10	NA4039	0UNI9B	SORTIE CAFE 1-8"	*OUTPUT COFFEE 1/8*					
11	23209	0UNI9C	ADAPTATEUR COUDE 90° M5 D4	*EBLOW FITTING M5 D4*					
12	DO54	0UNA1A	AIMANT DIAM 3 L:10mm	*MAGNET DIA:3 L:10mm*					
13	TC80	0UN211	JOINT TORIQUE 1,78X2,90 FKM	*GASKET 1.78X2.90 FKM*					
14	FR4031	0UN506	BUTEE PLASTIQUE	*THRUST*					
15	51800	0UN459	RONDELLE 12 X 24 X 2 INOX	*WASHER 12*					
16	FR2030	0UNA9E	ROUE CODEUSE ACIER ZINGUE	*CODING WHEEL*					
17	CN306	0UN997	VIS INOX TCHC 3 x 8	*SCREW M3 X 8*					
18	FR2028	0UNA9F	TOLE BRIDE	*SENSOR HOLDER*					
19	36501	0UN111	CAPTEUR Ø16	*SENSOR Ø16*					
20	36500	0UN163	CAPTEUR A FOURCHE EFFET HALL	*FORK SENSOR*					
21	37219	0UNBY9	COLLIER POUR POMPE FLUIDOTECH	*CLAMP*					
22	37305	0UN516	MOTOREDUCTEUR 24V 500tr/mn	*MOTOREDUCER 24V 500 rpm*					
23	PE66	0UN452	VIS TC M5 X 16 INOX	*SCREW M5 X 16*					
24	FR4028	0UN512	COLERETTE DE FIXATION	*PLASTING RING*					
25	51250	0UN958	ECROU M10 X 75	*NUT M10 X 75*					
26	51751	0UN450	RONDELLE 10.2 X 20 X 2	*WASHER 10*					
27	52610	0UN505	COUSSINET XFM 10-12-9	*BEARING 10-12-9*					
28	FR4020	0UN290	SUPPORT MOTEUR	*MOTOR HOLDER*					
29	FR4023	0UN583	AXE DU PISTON	*PISTON AXLE*					
30	52812	0UN581	ANNEAU DIAM 12 EP 0,6	*RING DIAM 12 EP 0,6*					
31	53110	0UN340	BUTEE A BILLE 51100 d24xd10x9	*THRUST BALL BEARING 24X10X9*					
32	CN489	0UNA09	VIS INOX CHC 4 x 16	*SCREW M4 X 16*					
33	FR4124	0UN411	RONDELLE SORTIE CAFE	*COFFEE OUTLET RING*					
34	FR4032	0UN521	VIS TETON M8 X 100	*SCREW M8 X 100*					
35	FR4027	0UN281	ECROU Tr 12 X 3	*NUT TR 12 X 3*					
36	28820	0UN913	RESSORT ACIER d19.20 X L40 Df:3.2	*SPRING Do:19.20 X df:3.2 Lo:40*					
37	FR4134	0UN300	BAGUE PTFE	*RING PTFE*					
38	FR4122	0UN317	PISTON	*PISTON*					
39	28500	0UN552	JOINT A LEVRE PISTON Ø37.5	*GASKET Ø 37.5*					
40	FR4123	0UN293	RONDELLE INTERMEDIAIRE PISTON	*PISTON GASKET*					
41	33419	0UN990	FILTRE CAFE 24 - 180 STANDARD	*COFFEE FILTER 24 -180 STANDARD*			a;b;c;d;j;k;x;y;z;a1;b1;c1;d1		
41	33447	0UNA1F	FILTRE CAFE 1 TASSE 24 FENTES SELF	*COFFEE FILTER 1 CUP 24 SLOTS SELF*					
41	33448	0UN139	FILTRE CAFE 48 FENTES EXPORT	*COFFEE FILTER 48 SLOTS EXPORT*			g;h;l;m		
42	NA1066	0UNJO3	ASM PISTON SS MOTEUR (33419)	*PISTON SET W/O MOTOR (33419)*			a;b;c;d;j;k;x;y;z;a1;b1;c1;d1		
42	NA1067	0UNJTD	ASM PISTON SS MOTEUR (33447)	*PISTON SET W/O MOTOR (33447)*					
42	NA1068	0UNJO4	ASM PISTON SS MOTEUR (33448)	*PISTON SET W/O MOTOR (33448)*			g;h;l;m		
43	FR1011	0UN110	ENSEMBLE MOTEUR PISTON	*PISTON MOTOR ASSEMBLY*					
44	NA1120	0UNJU9	KIT SORTIE CAFÉ DUO XP	*COFFEE OUTPUT DUO XP*			a;b;c;d;g;h;j;k;l;m;x;y;z;a1;b1;c1;d1		

Note : No code → unavailable for spare parts

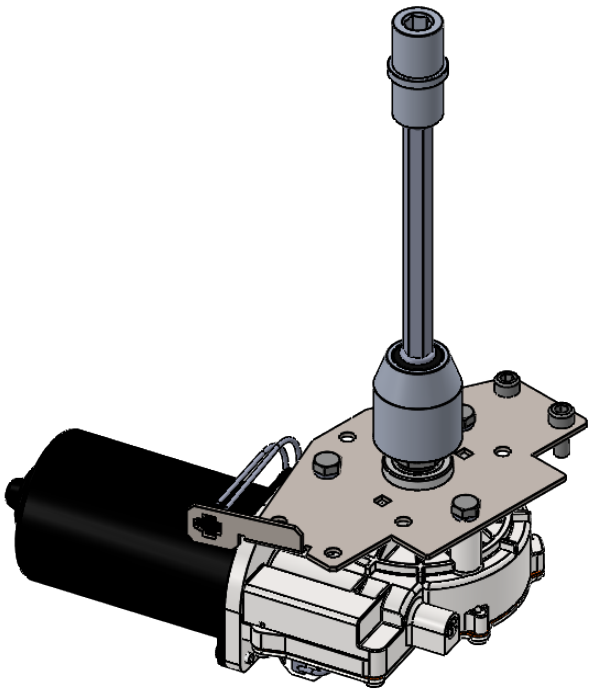

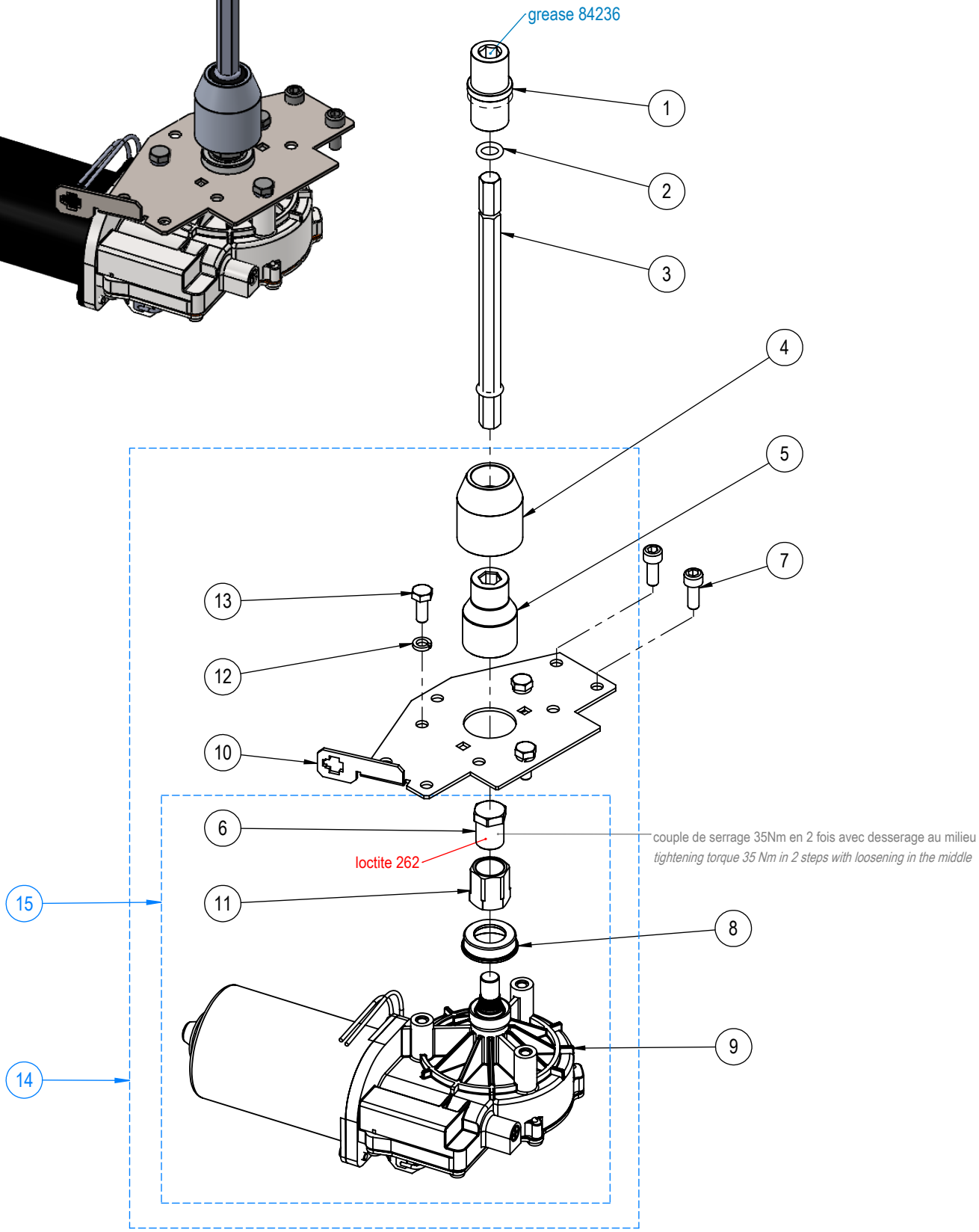

01/24	ENSEMBLE MOTEUR PLATEAU *TURNTABLE MOTOR SET*	432

PLANCHE - PLATE 432

Pos.	Fact. code	Code	Description FR	*Description GB*	V	W&T	REF.	NOTES	S/N BREAK
1	TG4113	0UNJDN	ACCOUPLEMENT HAUT	*HIGH COUPLING*			a;b;c;d;g;h;j;k;l;m;x;y;z;a1;b1;c1;d1		
2	PH78	0UN202	JOINT TORIQUE 2,62X9,13 EPDM	*O RING - 9,13 X 2,62*			a;b;c;d;g;h;j;k;l;m;x;y;z;a1;b1;c1;d1		
3	FR4015	0UN534	AXE DE TRANSMISSION APRES 04/02	*AXLE AFTER 04/2002*			a;b;c;d;g;h;j;k;l;m;x;y;z;a1;b1;c1;d1		
4	FR4113	0UN549	RENFORT ALU ACCOUPLEMENT	*REINFORCE COUPLING STAINLESS*					
5	FR7002	0UN532	DOUILLE POUR MOTEUR MFD351	*MOTOREDUCER RING*					
6	TG4112		ECROU ACCOUPLEMENT MOTEUR 37382	*MOTOR COUPLING NUT 37382*					
7	GR4	0UNA3A	VIS CHC M6 X 16	*SCREW M6 X 16*					
8	TG4282		ENTRETOISE MAINTIEN JOINT D'AXE	*MAINTENANCE SPACER*					
9	37382	0UNI9D	MOTOREDUCTEUR 406028	*MOTOREDUCER*					
10	TG2082		TOLE SUPPORT MOTEUR 37382	*37382 MOTOR HOLDER*					
11	TG4110		ACCOUPLEMENT MOTEUR 37382	*MOTOR COUPLING 37382*					
12	51655	0UNA5W	RONDELLE GROWER DE 6	*WASHER 6*					
13	SH28		VIS TH M6 X 16	*SCREW M6 X 16*					
14	TG1095	0UNI9E	ASM MOTEUR 37382 PLATEAU DUO	*TURNTABLE MOTOR ASSEMBLY*			a;b;c;d;g;h;j;k;l;m;x;y;z;a1;b1;c1;d1		
15	TG1622	0UNJBI	SOUS ENSEMBLE MOTEUR REDUIT	*TANGO TURNTABLE MOTOR SET*			a;b;c;d;g;h;j;k;l;m;x;y;z;a1;b1;c1;d1		

Note : No code → unavailable for spare parts

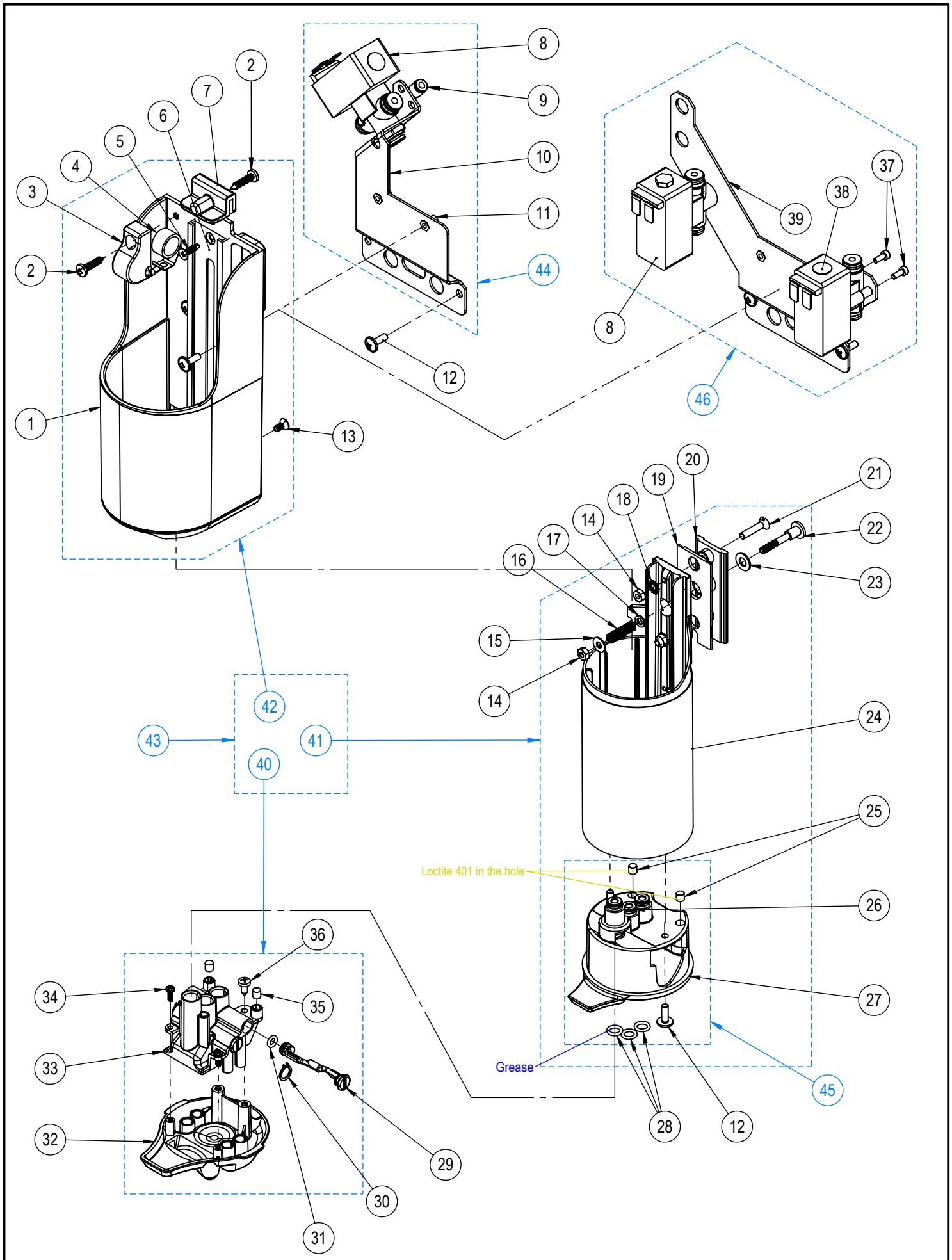

08/24	BEC CAFE *COFFEE SPOUT*	440

PLANCHE - PLATE 440

Pos.	Fact. code	Code	Description FR	*Description GB*	V	W&T	REF.	NOTES	S/N BREAK
1	NA1050		ASM CARENAGE FIXE	*SUB ASSEMBLY FIXED FAIRING*					
2	50725		VIS PLASTIC TB N°6(3,5) X 19 INOX	*PLASTIC SCREW TB N°6(3,5) X 19*					
3	NA7026		SUPPORT RESSORT ENROULE	*ROLLED UP SPRING HOLDER*					
4	NA4008		RESSORT ENROULE	*ROLLED UP SPRING*					
5	50724		VIS PLASTIC TF N°6(3,5) X 13 INOX	*PLASTIC SCREW TF N°6(3,5) X 13*					
6	NA2000		RAIL BEC CAFE	*COFFEE SPOUT RAIL*					
7	NA7027		BUTEE SUPERIEURE	*TOP STOPPER*					
8	35038	0UNI9F	EV LAIT/AIR 3/2 SEPARATION DN3	*ELECTROVALVE 3/2 DN3*					
9	23617	0UNJLQ	RACCORD RAPIDE DROIT D:4 F-F	*QUICK FITTING D:4 F-F*					
10	NA2018		SUPPORT BEC & EV BEC	*SUPPORT SHEET COFFEE SPOUT*					
11	51065		ECROU A SERTIR M4 INOX	*NUT TO CRIMP M4 STAINLESS STEEL*					
12	50126	0UN615	VIS TB CRUCIFORME A EMBASE M4 x 12	*CRUCIFORM SCREW M4 x 12*				MOQ = 50	
13	50722		VIS PLASTIC TF N°6(3,5) X 8 INOX	*PLASTIC SCREW TF N°6(3,5) X 8*					
14	PG14	0UN277	ECROU M4	*NUT M4*					
15	PG15B	0UNA3S	RONDELLE INOX 4.2X10X0.8	*WASHER*					
16	28806	0UNC40	RESSORT DE CLAPET ET DEVETISSEUR	*SHEDDER SPRING*					
17	PG15	0UNG9F	RONDELLE LAITON DE 4 TYPE Z	*WASHER*					
18	CN343	0UNA3M	RONDELLE EVENTAIL 4	*WASHER 4*					
19	NA4005		GLISSIERE ARRIERE BEC	*BACK SLIDER COFFEE SPOUT*					
20	NA4004		GLISSIERE AVANT BEC	*FRONT SLIDER COFFEE SPOUT*					
21	CN124	0UNA1R	VIS INOX TF 4 x 20	*SCREW M4 X 20*					
22	NA4006		AXE COMPRESSION	*COMPRESSION AXLE*					
23	51602	0UNDLL	RONDELLE INOX MOYENNE DE 5	*WASHER*					
24	NA1051		ASM CARENAGE MOBILE	*SUB ASSEMBLY MOBILE FAIRING*					
25	NA4035		AIMANT CYLINDRIQUE DIAM 5X5	*CYLINDRICAL MAGNET DIAM 5X5*					
26	23201		INSERT D4 - INOX	*INSERT D4*					
27	NA7030		DISTRIBUTEUR PRODUITS	*PRODUCTS DISPENSER*					
28	ID62	0UNFDA	JOINT TORIQUE POUR EV PI-45	*SOLENOID O'RING - GROUP*					
29	NA7034		REPATITEUR PRODUITS	*REPATITOR SHAFT*					
30	52801	0UN533	PALIER LISSE XSM 1517-15	*BEARING XSM 1517-15*					
31	RR38	0UN119	JOINT TORIQUE 1,78X4,48 EPDM	*GASKET - 4,48 X 1,78*					
32	NA7032	0UNJBC	LANGUETTE BEC CAFE	*COFFEE SPOUT NOZZLE HANDLE*					
33	NA7033		NEZ BEC CAFE	*COFFEE SPOUT NOZZLE*					
34	50716	0UNA5Y	VIS TCBZ 3X8	*SCREW TCBZ 3X8*					
35	NA4034		CYLINDRE FERRETIQUE DIAM 5X5	*FERRETIC CYLINDER DIAM 5X5*					
36	PG51	0UN915	VIS TOLE TC Ac Zn 3,9 X 9,5	*SHEET SCREW 3,9 x 9,5*					
37	CN306	0UN997	VIS INOX TCHC 3 x 8	*SCREW M3 X 8*					
38	35504	0UNI9N	EV 24V DC D4FF DN1,5	*2 WAYS 24VDC Ø4FF DN1,5*					
39	NA2043		SUPPORT BEC & EV BEC 1GR	*SUPPORT SHEET COFFEE SPOUT*					
40	NA1020	0UNI9G	BEC CAFE AMOVIBLE	*REMOVABLE COFFEE SPOUT*					
41	NA1021	0UNJNV	BEC CAFE MOBILE	*MOVABLE COFFEE SPOUT*					
42	NA1022	0UNJNX	BEC CAFE FIXE	*FIXED COFFEE SPOUT*					
43	NA1007	0UNI9H	ASM BEC CAFE	*COFFEE SPOUT*			a;c;g;j;k;l;x;y;a1;b1		
43	NA1079	0UNJC0	ASM BEC CAFE POUR LAIT	*COFFEE SPOUT FOR MILK*			b;d;F.h;m;z;c1;d1		
44	NA1042	0UNJHA	ASM SUPPORT EV BEC CAFE	*COMPLETE COFFEE SPOUT EV*			a;c;g;j;k;l;x;y;a1;b1;b;d;h;m;z;c1;d1		
45	NA1071	0UNJU7	ASM PORTE BEC CAFE	*ASSEMBLY COFFEE SPOUT HOLDER*					
46	NA1083	0UNJNY	ASM SUPPORT EV BEC CAFE SOLO	*COMPLETE COFFEE SPOUT EV*			e;f;i;n;o;p;q;r;s;t;u;v;w;e1;f1;g1		

Note : No code → unavailable for spare parts

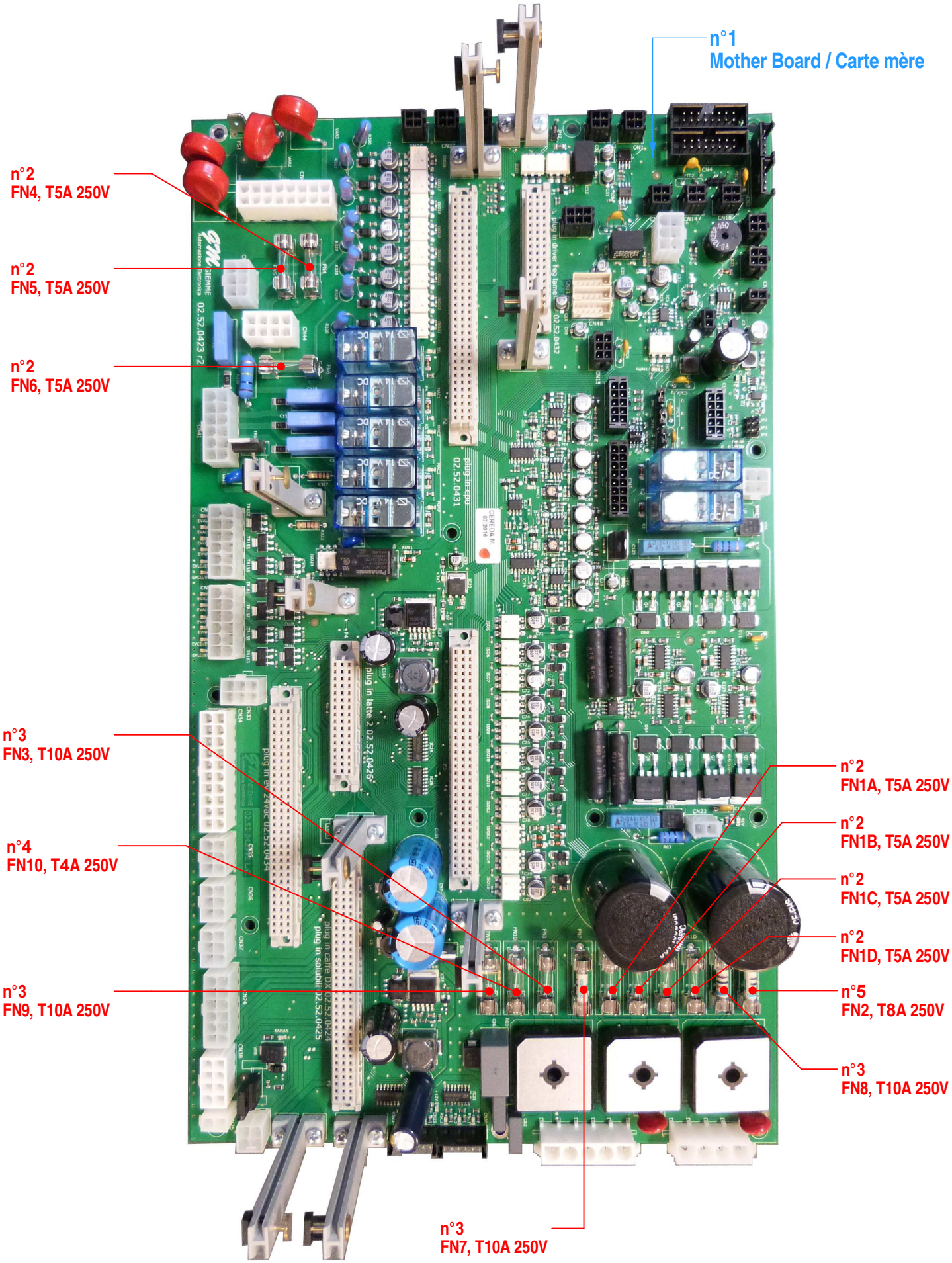

03/24	FUSIBLES CARTE MERE *FUSES CONNECTORS*	502

PLANCHE - PLATE 502

Pos.	Fact. code	Code	Description FR	*Description GB*	V	W&T	REF.	NOTES	S/N BREAK
1	45387R4	0UNJI1	CARTE MERE TANGO ST Version R4	*MOTHER BOARD R4*					
2	43115	0UN115	FUSIBLE 5 X 20 5A RETARDE T	*FUSE 5A DELAYED*					
3	43112	0UN930	FUSIBLE 5 X 20 10A RETARDE T	*FUSE 10A DELAYED*					
4	43102	0UN062	FUSIBLE 5 X 20 4A 250V RETARDE T	*FUSE 4A DELAYED*					
5	43108	0UNJK9	FUSIBLE 8A retardé - 5 X 20 - T8AL 250V	*FUSE 8A DELAYED*					

FN1A	5A / EV-AC1-A / MODULE 24V: EVRE - EVSE - EVSV - EVNC - EVNK/EVNC - EVA - EVV	
FN1B	5A / EV-AC1-B / MODULE SOLUBLE: MT1 - MT2 - FAN SOL - EVKD/EVM1 - EAED/EVM2 MODULE CAFE DX: EVKD/EVM1 - EAED/EVM2 - EVCD - EVP2 - EVLD - EVS2	
FN1C	5A / EV-AC1-C / MODULE 24V: EVNKG - EVAEG EVLG - EVCG - EVP1 - EVS1	
FN1D	5A / EV-AC1-D / MODULE 24V: EVAL1 - EVNL1 - EVVL1 - EVAL2 - EVNL2 - EVLL2	
FN2	8A / 22V / ALIM MOTEUR PISTON & PLATEAU	*PISTON & TURNTABLE MOTOR SUPPLY*
FN3	10A / 19V / +24V SECONDAIRE TRANSFO	TRANSFO SECONDARY
FN4	5A / TELERUPTEUR	STEPPING SWITCH
FN5	5A / NEUTRE	*NEUTRAL*
FN6	5A / RELAIS / MAC1 - MAC2 - MAC3 - GET1 - GET2 - GET3 - POMPE - AUX1 - CHGR	
FN7	10A / +V PLATEAU / MOTEUR PLATEAU	*TURNTABLE MOTOR*
FN8	10A / +V PISTON / MOTEUR PISTON	*PISTON MOTOR*
FN9	10A / +24V CONTINU + POMPE LAIT	*DC + MILK POMP*
FN10	4A / +12V, +9V, +5V, +3.3V BASSE TENSION CONTINUE ALIM CAPTEUR	

Note : No code → unavailable for spare parts

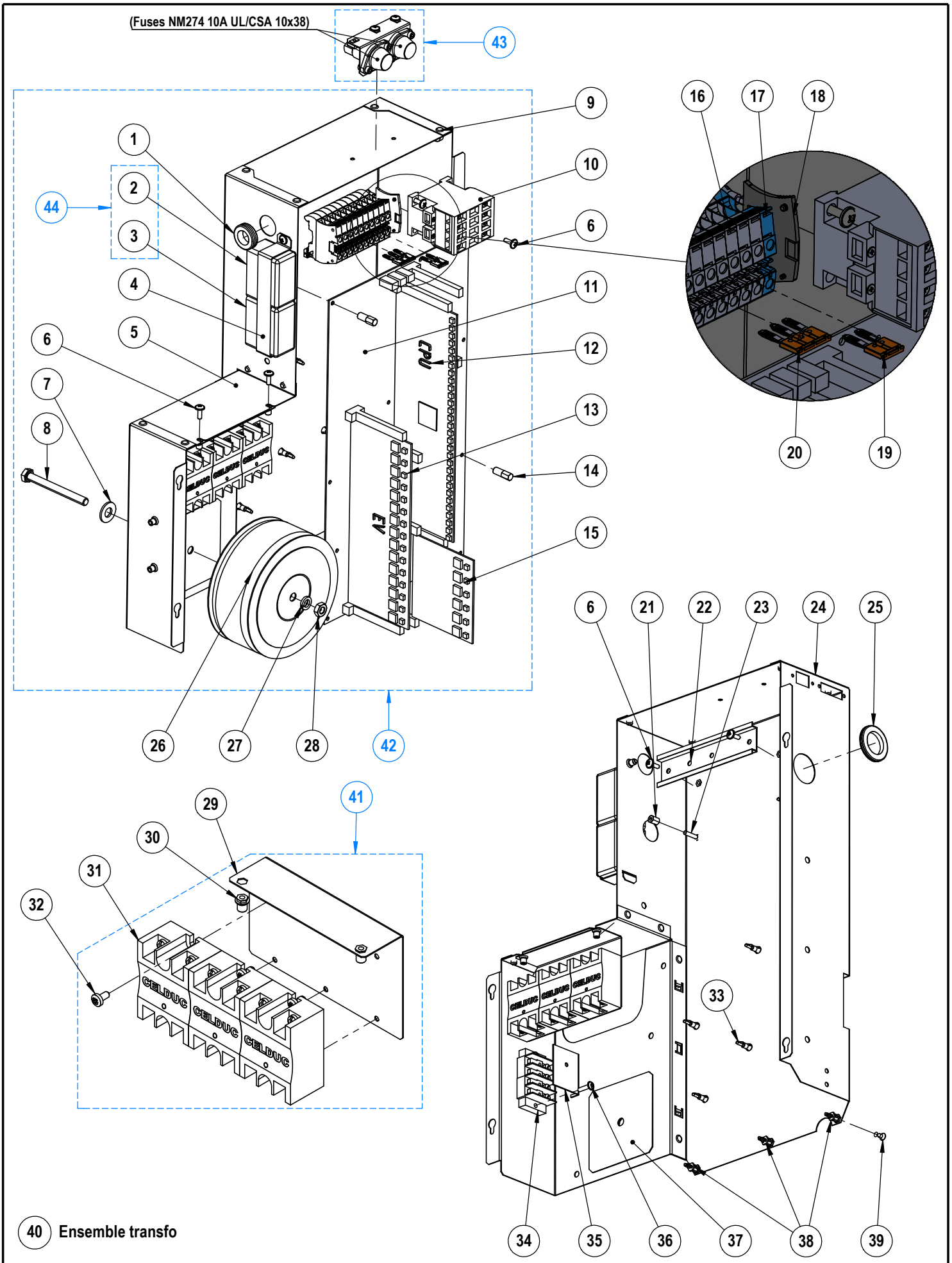

10/24	**BOITIER ÉLECTRONIQUE** *ELECTRONIC BOX*	520

PLANCHE - PLATE 520

Pos.	Fact. code	Code	Description FR	*Description GB*	V	W&T	REF.	NOTES	S/N BREAK
1	ED72	0UNJQ9	PASSE-FIL CAOUTCHOUC 16/22/27	*GROMMET*					
2	44725	0UNJRA	FILTRE CEM 16A 250V/440V 50/60Hz	*EMC FILTER FA.20.004-16A*			a;b;c;d;e;f;i;j;k;r;s;t;u;v;w;x;y;z;a1;b1;c1;d1;e1;f1;g1		
3	44727		FILTRE CEM 250V 50/60Hz	*EMC FILTER 250V 50/60Hz*					
4	NA2031	0UNJRB	TOLE SUPPORT FILTRE EMC	*EMC FILTER HOLDER*					
5	NA2009		TOLE FERMETURE POUR HYBRIDE	*CLOSING SHEET FOR HYBRID*					
6	50126	0UN615	VIS TB CRUCIFORME A EMBASE M4 x 12	*CRUCIFORM SCREW M4 x 12*				MOQ = 50	
7	CH62	0UN835	RONDELLE ACIER ZINGUEE DE 10	*WASHER*					
8	50420	0UNJRC	VIS TH M8 X 70 ZN	*SCREW M8 X 70 ZN*					
9	52008		RIVET INOX Ø4	*SNAP RIVET STAINLESS STEEL*					
10	43800	0UN087	CONTACTEUR TETRA. 220V 25A 50HZ	*CONTACTOR 220V 25A 50Hz*			a;b;c;d;e;f;i;j;k;r;s;t;u;v;w;x;y;z;a1;b1;c1;d1;e1;f1;g1		
10	43801	0UN578	CONTACTEUR TETRA. 200V 60HZ	*CONTACTOR 200V 60HZ*			g;h;l;m;n;o;p;q		
11	45387R4	0UNJI1	CARTE MERE TANGO ST Version R4	*MOTHER BOARD R4*					
12	45381	0UN094	CARTE CPU	*CPU CARD*					
13	45382	0UN098	CARTE DRIVER EV	*ELECTROVALVE DRIVER CARD*					
14	51053	0UN924	ECROU LONG M4	*LONG NUT M4*					
15	45384	0UN084	CARTE MODULE 2EME PISTON	*MODULE CARD 2ND PISTON*			a;b;c;d;g;h;j;k;l;m;x;y;z;a1;b1;c1;d1		
16	41440	0UNJTE	BORNIER GRIS ZS10 - K508010	*TERMINAL BLOCK GREY*					
17	41441	0UNJTF	BORNIER BLEU ZS10 - K508020	*TERMINAL BLOCK BLUE*					
18	41446	0UNJTG	JOUE EXTREMITE BORNIER - ES4 - K505910	*FLANGE TERMINAL BLOCK*					
19	41442	0UNJTH	JUMPER 2 POLES - JB8-2 K908302	*2 STUDS STRIP*					
20	41443	0UNJTI	JUMPER 3 POLES - JB8-3 K908303	*3 STUDS STRIP*					
21	CN651	0UN940	ENTRETOISE COURTE DU C.I.	*SHORT SPACER FRAME*					
22	FR2013	0UNE5I	RAIL	*RAIL*					
23	CN124	0UNA1R	VIS INOX TF 4 x 20	*SCREW M4 X 20*					
24	NA2008		TOLE ELECTRONIQUE HYBRIDE	*HYBRID ELECTRONIC SHEET*					
25	42003	0UNDBY	PASSE FIL Ø38	*GROMMET Ø38*					
26	44200	0UN360	TRANSFO TOROIDAL 540 Va / 200-230-240-22-19V	*TRANSFORMER 540Va / 200-230-240-22-19V*					
27	RR83	0UN592	RONDELLE GROVER DE 8	*WASHER 8*					
28	PE12	0UN430	ECROU M8	*NUT M8*					
29	NA2010		TOLE SUPPORT RELAIS STATIQUES	*STATIC RELAY SUPPORT SHEET*					
30	51065		ECROU A SERTIR M4 INOX	*NUT TO CRIMP M4 STAINLESS STEEL*					
31	44410	0UN169	RELAIS STATIQUE 25A	*SOLID STATE RELAY 25A*					
32	50104	0UNDK1	VIS AUTOFORMEUSE TC M4 X 8	*SCREW M4 X 8*					
33	42400	0UN312	ENTRETOISE PLASTIQUE FIX CARTE	*PLASTIC PCB SUPPORT*					
34	41402	0UNJTJ	BARRETTE 4 POLES	*TERMINAL BOARD*					
35	41403	0UNJRD	PROTECTION 4 POLES	*COVER*					
36	CN489E	0UNBLN	VIS INOX CHC 4 x 16 A EMBASE	*SCREW M4 X 16 WITH BASE*					
37	NA2011		TOLE SUPPORT TRANSFO	*TRANSFO SUPPORT SHEET*					
38	42403		ENTRETOISE PLASTIQUE FIX CARTE	*PLASTIC PCB SUPPORT*					
39	50706	0UNDLF	VIS PARKER N6 9.5 SP CRUCIF.	*PARKER SCREW*					
40	NA1043	0UNJRF	ASM TRANSFO	*COMPLETE TRANSFO*					
41	NA1044	0UNJNQ	ASM RELAIS STATIQUES	*COMPLETE STATIC RELAY*					
42	NA1013	0UNJO6	BOITE ELECTRONIQUE NEXT GEN	*ELECTRONIC BOX*					
43	TG1043	0UNJNR	ENSEMBLE PORTE FUSIBLE UL	*FUSES*			g;h;l;m;n;o;p;q		
44	44728		Kit filtres CEM Tango XP	*EMC FILTER KIT*					

Note : No code → unavailable for spare parts

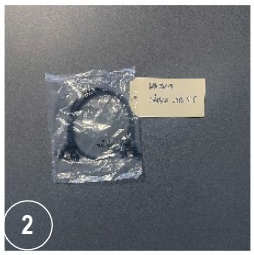

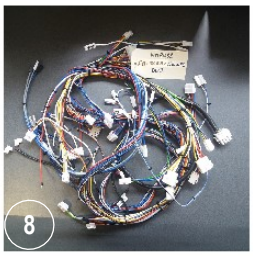

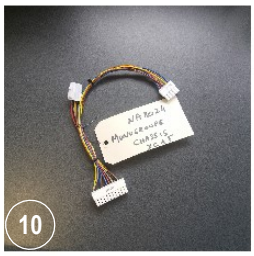

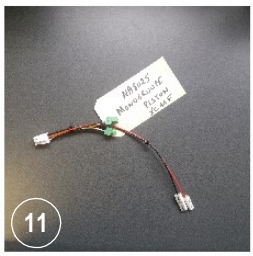

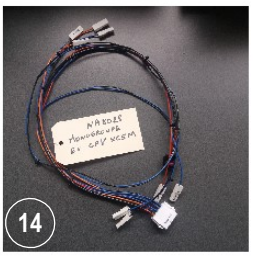

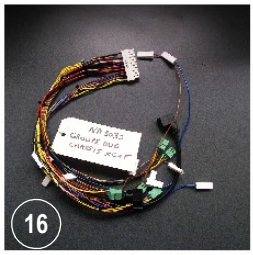

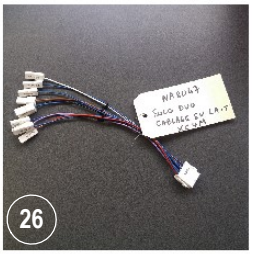

10/24	**LISTE CABLAGES** *WIRINGS LIST*	551

PLANCHE - PLATE 551

Pos.	Fact. code	Code	Description FR	*Description GB*	V	W&T	REF.	NOTES	S/N BREAK
1	NA8007	0UNJFF	CABLE STEAMAIR	*STEAMAIR WIRE*			g;h;j;k;l;m;n;o;p;q;s;v;y;b1;d1;f1;g1		
2	NA8008	0UNJHD	CABLE USB A F-F	*USB WIRE*					
3	NA8012		CABLAGE RESISTANCE CAFE UL	*UL COFFEE HEATING ELEMENT WIRE*			g;h;l;m;n;o;p;q		
4	NA8013		CABLAGE RESISTANCE VAPEUR UL	*UL STEAM HEATING ELEMENT WIRE*			g;h;l;m;n;o;p;q		
5	NA8014		CABLAGE RESISTANCE CAFE	*COFFEE HEATING ELEMENT WIRE*			a;b;c;d;e;f;i;j;k;r;s;t;u;v;w;x;y;z;a1;b1;c1;d1;e1;f1;g1		
6	NA8015		CABLAGE RESISTANCE VAPEUR	*STEAM HEATING ELEMENT WIRE*			a;b;c;d;e;f;i;j;k;r;s;t;u;v;w;x;y;z;a1;b1;c1;d1;e1;f1;g1		
7	NA8021		GROUPE SOLO FAISCEAU	*WIRING HARNESS 1 GROUP*			e;f;i;n;o;p;q;r;s;t;u;v;w;e1;f1;g1		
8	NA8022		GROUPE DUO FAISCEAU	*WIRING HARNESS 2 GROUPS*			a;b;c;d;g;h;j;k;l;m;x;y;z;a1;b1;c1;d1		
9	NA8023		GROUPE SOLO VENTOLINE	*VENTOLIN 1 GROUP*			e;f;i;n;o;p;q;r;s;t;u;v;w;e1;f1;g1		
10	NA8024		GROUPE SOLO CHASSIS XC1F	*XC1F FRAME 1 GROUP*			e;f;i;n;o;p;q;r;s;t;u;v;w;e1;f1;g1		
11	NA8025		GROUPE SOLO PISTON XC11F	*XC1F PISTON 1 GROUP*			e;f;i;n;o;p;q;r;s;t;u;v;w;e1;f1;g1		
12	NA8026		GROUPE SOLO RALLONGE MOTEUR PLATEAU	*TURNTABLE ENGINE EXTENTION 1 GROUP*			e;f;i;n;o;p;q;r;s;t;u;v;w;e1;f1;g1		
13	NA8027		GROUPE SOLO CHAUFFAGE GROUPE XC6F	*XC6F GROUP HEATING 1 GROUP*			e;f;i;n;o;p;q;r;s;t;u;v;w;e1;f1;g1		
14	NA8028		GROUPE SOLO EV CPV XC5M	*XC5M CPV EV 1 GROUP*			e;f;i;n;o;p;q;r;s;t;u;v;w;e1;f1;g1		
15	NA8029		GROUPE DUO CHAUFFAGE GROUPE XC6F	*XC6F GROUP HEATING 2 GROUPS*			a;b;c;d;g;h;j;k;l;m;x;y;z;a1;b1;c1;d1		
16	NA8030		GROUPE DUO CHASSIS XC1F	*XC1F FRAME 2 GROUPS*			a;b;c;d;g;h;j;k;l;m;x;y;z;a1;b1;c1;d1		
17	NA8031		GROUPE DUO EV CPV XC5M	*XC5M CPV EV 2 GROUPS*			a;b;c;d;g;h;j;k;l;m;x;y;z;a1;b1;c1;d1		
18	NA8048		SOLO DUO CABLAGE RELAIS STATIQUES	*STATICS RELAIS 2 GROUPS*					
19	NA8040		SOLO DUO SONDES XC2F	*XC2F PROBES*					
20	NA8041		SOLO DUO SONDE THK XC3F	*XC3F THK PROBE*					
21	NA8042		SOLO DUO SECURITE BAC A MARC CN20	*CN20 WASTE DRAWER SECURITY*					
22	NA8043		SOLO DUO CABLAGE CONTACTEUR PUISSANCE	*POWER SUPPLY WIRING*					
23	NA8044		SOLO DUO CABLE NAPPE	*SOLO DUO WIRE LAYER*					
24	NA8045		SOLO DUO CABLAGE RELAIS STATIQUE	*STATICS RELAIS WIRING*					
25	NA8046		SOLO DUO CABLAGE TERRE CHAUDIERE	*BOILER EARTH WIRING*					
26	NA8047		SOLO DUO CABLAGE EV LAIT XC4M	*XC4M MILK EV*					
27	TG8022		CABLE ALIMENTATION MOTEUR	*ALIMENTATION MOTOR WIRE*					

Note : No code → unavailable for spare parts

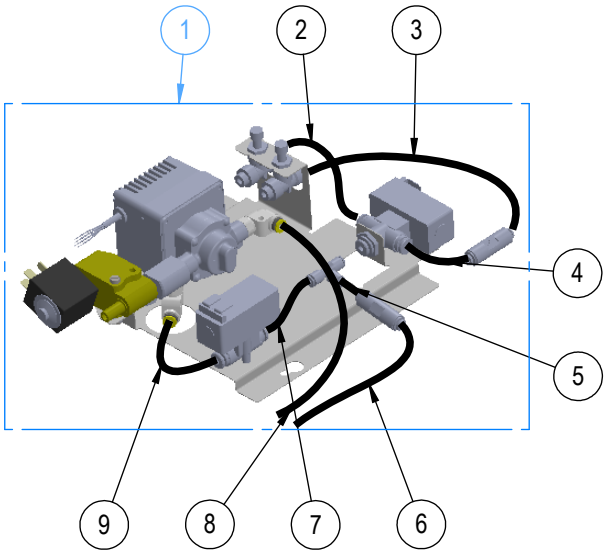

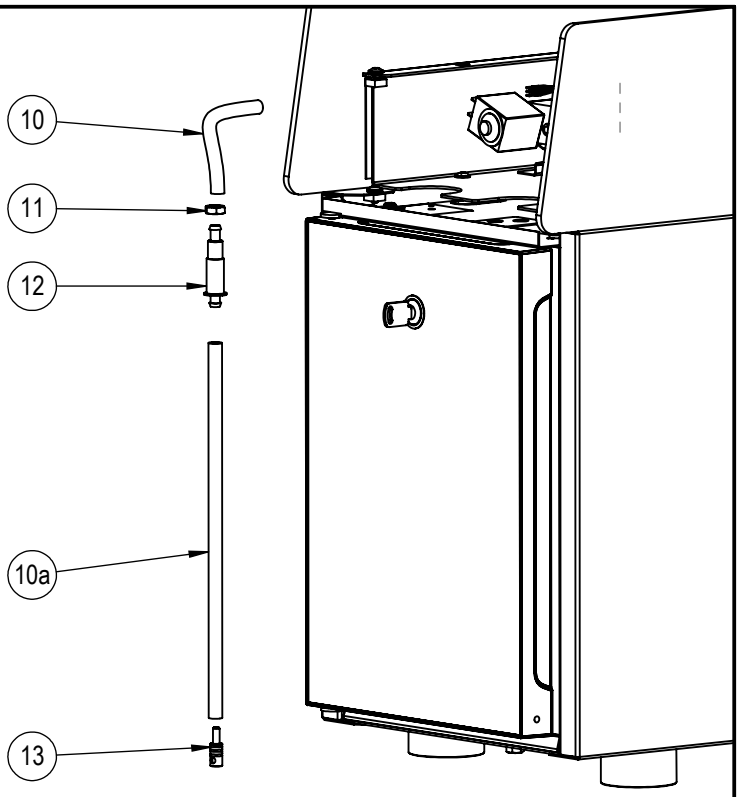

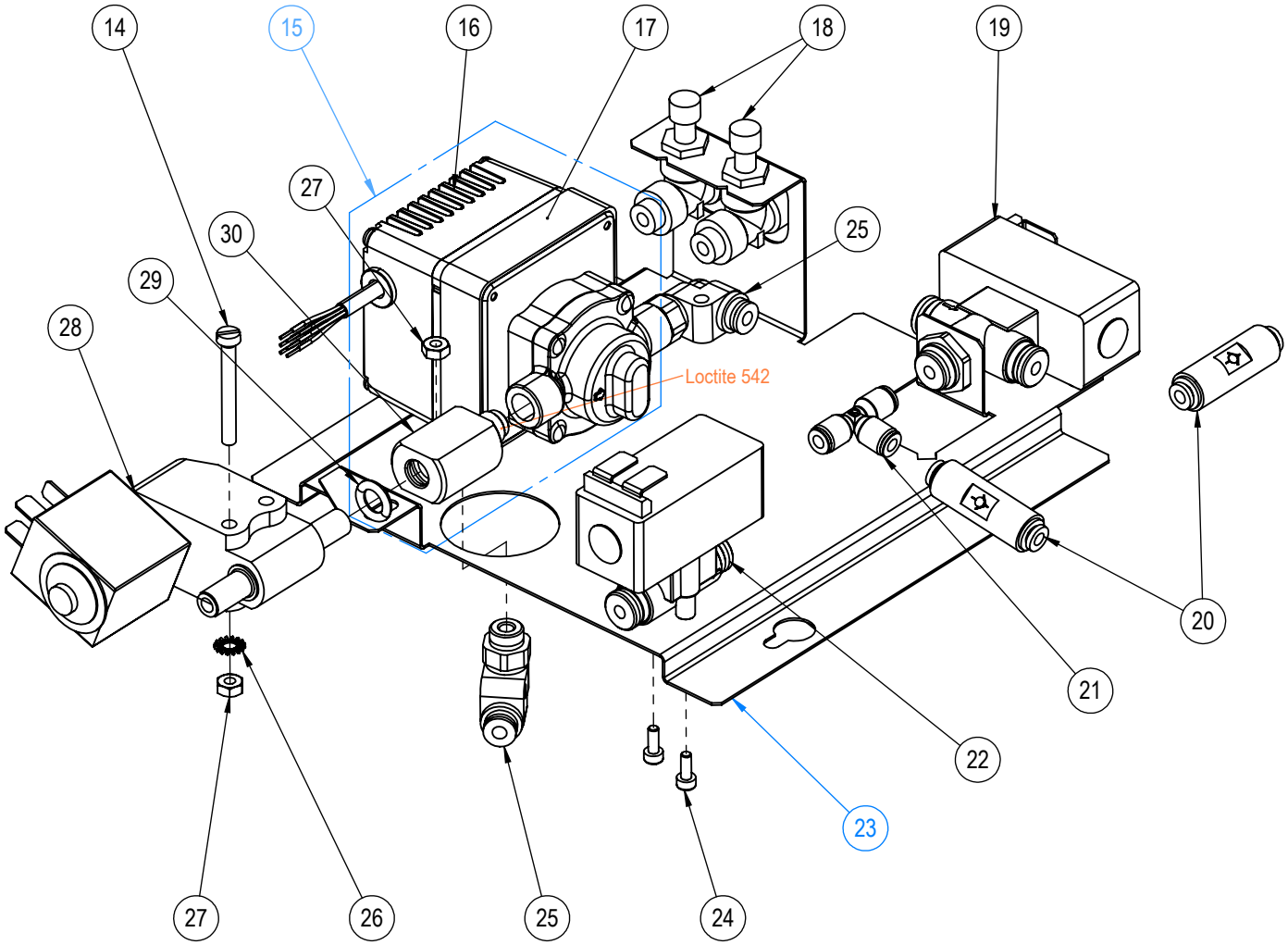

Montage après 09/2018 version V2
Mounting after 09/2018 V2 version

05/23	OPTION POMPE LAIT "BLOC POMPE LAIT" *"MILK PUMP BLOCK" MILK PUMP KIT*	642

PLANCHE - PLATE 642

Pos.	Fact. code	Code	Description FR	*Description GB*	V	W&T	REF.	NOTES	S/N BREAK
1	TG1360	0UN421	BLOC LAIT MODULE ST (V2)	*BLOCK MILK MODULE ST*			b;d;f;h;i;m;o;q;t;w;z;c1;d1		
2	TG6536	0UN822	TUBE PTFE D:4 L:130mm	*PTFE PIPE D:4 L:130mm*					
3	TG6534	0UN852	TUBE PTFE D:4 L:100mm	*PTFE PIPE D:4 L:100mm*					
4	TG6539	0UN853	TUBE PTFE D:4 L:250mm	*PTFE PIPE D:4 L:250mm*					
5	TG6534	0UN852	TUBE PTFE D:4 L:100mm	*PTFE PIPE D:4 L:100mm*					
6	TG6541	0UN854	TUBE PTFE D:4 L:400mm	*PTFE PIPE D:4 L:400mm*					
7	TG6535	0UN821	TUBE PTFE D:4 L:110mm	*PTFE PIPE D:4 L:110mm*					
8	TG6543	0UN670	TUBE PTFE D:4 L:450mm	*PTFE PIPE D:4 L:450mm*					
9	TG6537	0UN669	TUBE PTFE D:4 L:150mm	*PTFE PIPE D:4 L:150mm*					
10	NA6502	0UNJDZ	12740 DIAM 5-9 L: 1M	*12740 DIAM 5-9 L: 1M*				LG: 120MM	
10a	NA6502	0UNJDZ	12740 DIAM 5-9 L: 1M	*12740 DIAM 5-9 L: 1M*				LG: 300MM	
11	51351	0UN296	ECROU 1/8	*NUT 1/8*					
12	TG4050	0UN652	PASSE CLOISON	*BULKHEAD*					
13	26153	0UN078	REDUCTEUR CAPPUCCINATORE D2.5	*CAPPUCCINATORE REDUCER D2.5*					
14	50120	0UN757	VIS TC M4X35 INOX	*S.STEEL SCREW M4X35*					
15	TG1302	0UN402	KIT POMPE LAIT AVEC RACCORD	*KIT MILK PUMP WITH FITTING*					
16	37285	0UN074	MOTEUR POMPE 24V AVEC CABLE	*PUMP MOTOR 24V*					
17	37286	0UN674	ENSEMBLE FIXATION POUR POMPE 24V	*FIXING SET FOR 24V PUMP*					
18	23619	0UN044	REGLAGE AIR MICROMETRIQUE C/F D:4 F-F	*SETTING AIR HOT/COLD D:4 F-F*					
19	35038	0UNI9F	EV LAIT/AIR 3/2 SEPARATION DN3	*ELECTROVALVE 3/2 DN3*					
20	23618	0UN107	CLAPET ANTI-RETOUR D:4 F-F	*NON RETURN VALVE D:4 F-F*					
21	23612	0UN036	RACCORD RAPIDE TE 3V D:4F	*QUICK FITTING TE 3W D:4F*					
22	35508	0UN061	EV 24V DC D4FF DN2,5	*2 WAYS 24VDC Ø4FF DN2,5*					
23	TG2659	0UNA00	SUPPORT CIRCUIT LAIT + GOUJON	*MILK CIRCUIT HOLDER + SCREW*					
24	CN306	0UN997	VIS INOX TCHC 3 x 8	*SCREW M3 X 8*					
25	23615	0UN120	RACCORD RAPIDE COUDE D:4 F-1/8G	*ELBOW QUICK FITTING D:4 F-1/8G*					
26	CN343	0UNA3M	RONDELLE EVENTAIL 4	*WASHER 4*					
27	PG14	0UN277	ECROU M4	*NUT M4*					
28	35550	0UN022	ELECTROVANNE N.O 24V 50HZ	*ELECTROVALVE N.O 24V 50HZ*					
29	27821	0UN240	JOINT TORIQUE 2,62 X 7,59	*O-RING 2,62 X 7,59*					
30	TG4040	0UN851	RACCORD EN T ENTREE POMPE LAIT	*FITTING FOR MILK PUMP*					

Montage après 09/2018 (version V2) ***Mounting after 09/2018 (V2 version)***

Note : No code → unavailable for spare parts

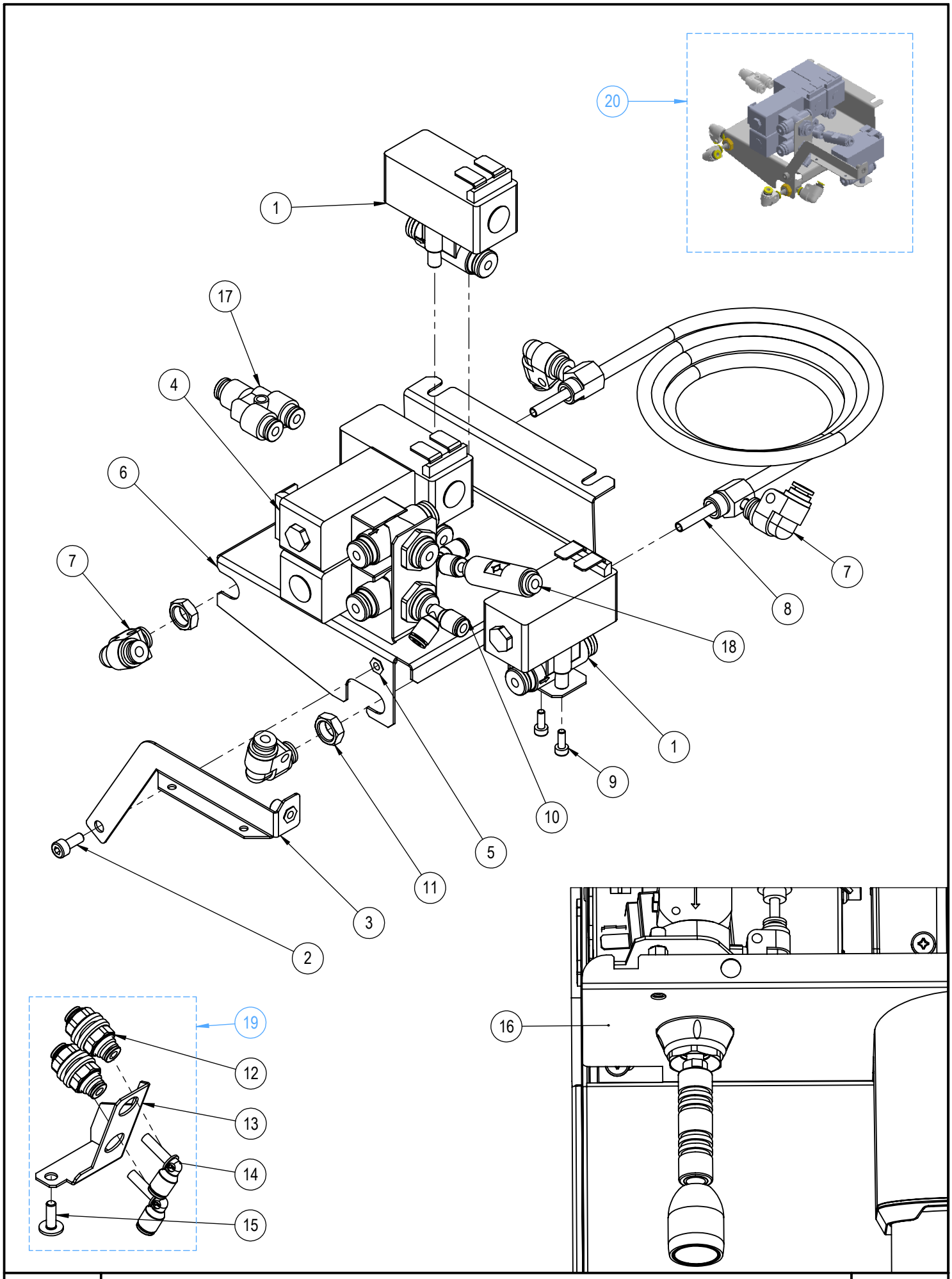

10/23	OPTION POMPE LAIT «BLOC LAIT XP» *"MILK BLOCK" MILK PUMP KIT*	645

PLANCHE - PLATE 645

Pos.	Fact. code	Code	Description FR	*Description GB*	V	W&T	REF.	NOTES	S/N BREAK
1	35508	0UN061	EV 24V DC D4FF DN2,5	*2 WAYS 24VDC Ø4FF DN2,5*					
2	PE59	0UN201	VIS TCHC M4x10 INOX	*SCREW 4 X 10*					
3	NA2028		TOLE RENFORT BLOC	*REINFORCED SHEET METAL*					
4	35038	0UNI9F	EV LAIT/AIR 3/2 SEPARATION DN3	*ELECTROVALVE 3/2 DN3*					
5	51065		ECROU A SERTIR M4 INOX	*NUT TO CRIMP M4 STAINLESS STEEL*					
6	NA2023		TOLE SUPPORT BLOC LAIT XP	*SHEET METAL STP SYSTEM*					
7	23613	0UN047	RACCORD RAPIDE COUDE 2V D:4 F-F	*ELBOW QUICK FITTING 2W D:4 F-F*					
8	TG6040	0UN261	TUBE SERPENTIN VAPEUR INOX	*HEATING COIL PIPE FOR STEAM*					
9	CN306	0UN997	VIS INOX TCHC 3 x 8	*SCREW M3 X 8*					
10	23614	0UN049	RACCORD RAPIDE T 3V D:4 M-F-F	*QUICK FITTING T 3W D:4 M-F-F*					
11	51351	0UN296	ECROU 1/8	*NUT 1/8*					
12	23610	0UN046	RACCORD RAPIDE DROIT PASSE CLOISON	*QUICK FITTING BULKHEAD*					
13	NA2027		TOLE CONNEXION TUBES	*CONNEXION PIPE*					
14	23611	0UN039	EQUERRE RACCORD RAPIDE PASSE CLOISON	*BULKHEAD CONNECTOR*					
15	50126	0UN615	VIS TB CRUCIFORME A EMBASE M4 x 12	*CRUCIFORM SCREW M4 x 12*				MOQ = 50	
16	NA3053	0UNJND	FINIT. DESSOUS CALANDRE 1 LAIT	*UNDER DISPLAY FINISH 1GR, MILK*			f;i;o;q;t;w		
16	NA3054	0UNJNE	FINIT. DESSOUS CALANDRE 2 LAIT	*UNDER DISPLAY FINISH 2GR, MILK*			b;d;h;m;z;c1;d1		
17	23623	0UNJU8	RACCORD RAPIDE Y D6F-2xD4F	*QUICK FITTING Y D6F-2xD4F*					
18	23618	0UN107	CLAPET ANTI-RETOUR D:4 F-F	*NON RETURN VALVE D:4 F-F*					
19	NA1053	0UNJNK	ASM TOLE CONNEXION TUBES	*PIPES LINK SET*			b;d;h;m;z;c1;d1		
20	NA1054	0UNJE4	BLOC LAIT MACHINE VERSION XP AVEC TUBES	*BLOCK MILK FOR MACHINE WITH PIPE*			b;d;f;h;i;m;o;q;t;w;z;c1;d1		

Note : No code → unavailable for spare parts

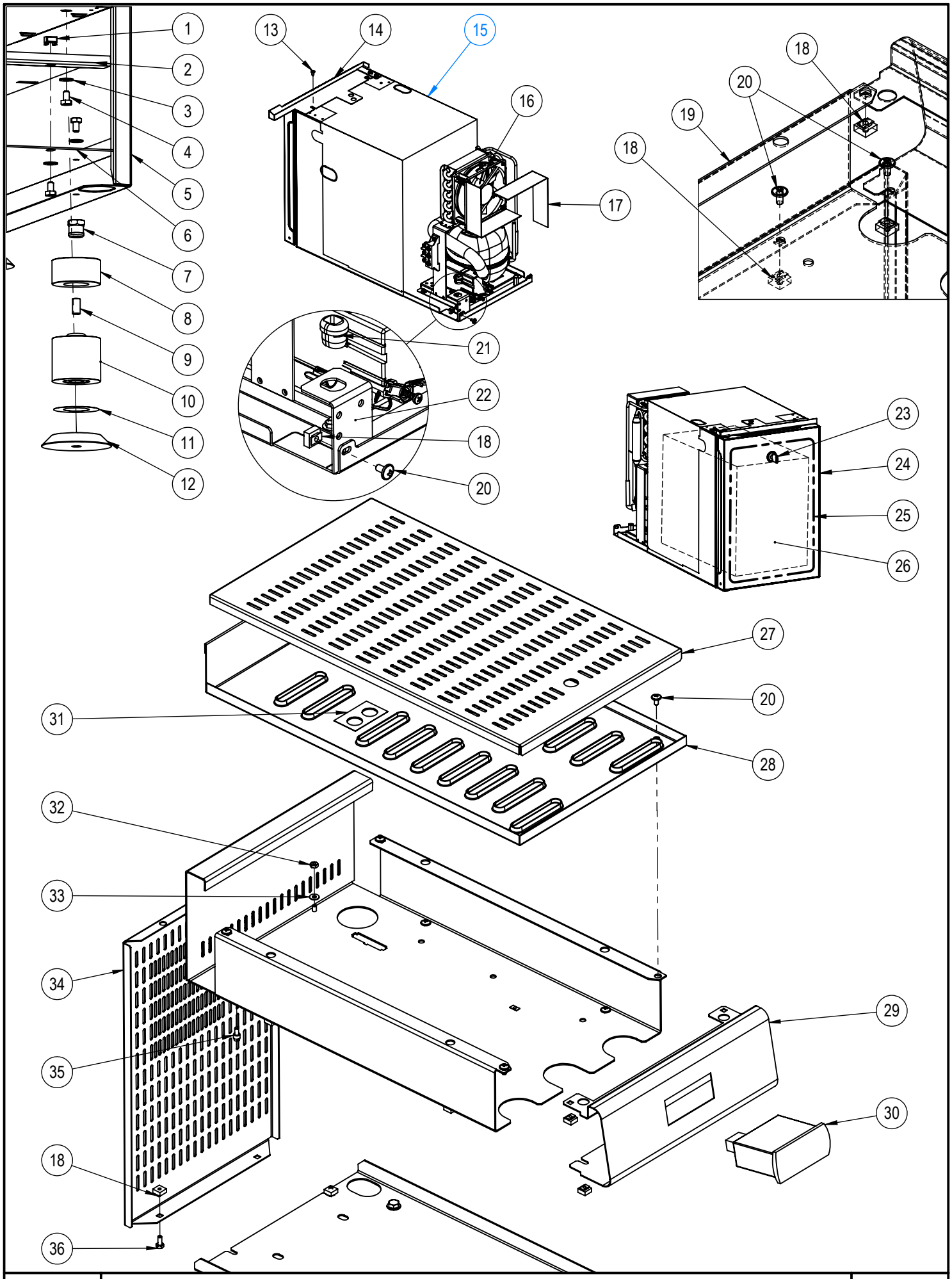

03/23	CARROSSERIE MODULE FRIGO FG16 XP *ABODY OF FG16 FRIDGE MODULE*	646

PLANCHE - PLATE 646

Pos.	Fact. code	Code	Description FR	*Description GB*	V	W&T	REF.	NOTES	S/N BREAK
1	52506	0UN279	ECROU CAGE M6 X ep 1	*INSERT NUT M6*					
2	TG0566	0UN713	SUPPORT FG16	*FRIDGE HOLDER*					
3	PH32	0UN278	RONDELLE ACIER Zn 6,25x14x1,2	*WASHER*					
4	51255	0UN971	VIS TH M6 X 10 INOX	*S. STEEL SCREW M6 X 10*					
5	TG3600	0UN737	COTE D&G FG16	*RIGHT & LEFT SIDE*					
6	TG0567	0UN799	CHASSIS INFERIEUR FG16	*LOWER CHASSIS*					
7	54010	0UN482	ECROU FIXATION PIED DIAM 50	*SPECIAL NUT FOR FOOT*					
8	NM002	0UN502	PIED CAOUTCHOUC NOIR	*FOOT*					
9	50402	0UNBVJ	VIS TCHC TETE BASSE M8X16 INOX	*S.STEEL SCREW M8 X 16*					
10	NM236	0UN371	PIED ALU D50 H44.5	*FOOT H44.5*					
11	45939	0UN282	ADHESIF PIED MACHINE	*STICKER FOOT*					
12	NZ7024	0UN315	PATIN PIED ARRIERE	*REAR RUBBER FOOT*					
13	PG51	0UN915	VIS TOLE TC Ac Zn 3,9 X 9,5	*SHEET SCREW 3,9 x 9,5*					
14	NA3055	0UNJRG	CORNIERE FG16 XP	*SHEET METAL CORNER*					
15	93009	0UN684	FRIGO VITRIFRIGO 9 LITRES 220-240V	*VITRIFRIGO 9 LITERS 220-240V*			b;d;f;i;t;w;z;c1;d1		
15	93019	0UN832	FRIGO VITRIFRIGO 9 LITRES 115V	*VITRIFRIGO 9 LITERS 115V*			h;m;o;q		
16	93028	0UNDNY	VENTILATEUR POUR FRIGO	*FAN FOR FRIDGE*					
17	TG2076	0UN806	TOLE CONDUIT VENTILATEUR	*SHEET METAL FOR FAN*					
18	CN661	0UN184	ECROU CAGE M4, EP 1/1.6	*INSERT NUT M4*					
19	TG0568	0UN664	CHASSIS SUPERIEUR FG16	*HIGH CHASSIS*					
20	50125	0UNA68	VIS TB CRUCIFORME A EMBASE M4 x 8	*CRUCIFORM SCREW M4 x 8*					
21	42000	0UN550	SERRE CABLE D:9 HEYCO	*CABLE CLAMP*					
22	TG0565	0UN632	SUPPORT CONNECTIQUE	*CONNECTORS HOLDER*					
23	93029	0UNJTQ	SERRURE ET 2 CLES	*LOCK WITH 2 KEYS*					
24	93039	0UNJTR	PORTE INOX	*STAINLESS STEEL DOOR*					
25	93049	0UNBZU	JOINT DE PORTE FG16	*SEAL DOOR*					
26	54229	0UNJBJ	BAC A LAIT 9L + COUVERCLE	*9 LITERS MILK CONTAINER*					
27	TG3612	0UN849	VERRIERE FG16	*CUP RACK*					
28	TG3610	0UN814	CHAUFFE TASSES FG16	*CUP WARMER*					
29	TG3620	0UN815	CALANDRE FG16	*FRONT PANEL*					
30	45039	0UN238	AFFICHEUR DE TEMPERATURE	*T° DISPLAY*					
31	46231	0UN755	STICKER AIR ADJUSTMENT	*STICKER AIR ADJUSTMENT*					
32	PG14	0UN277	ECROU M4	*NUT M4*					
33	PG15B	0UNA3S	RONDELLE INOX 4.2X10X0.8	*WASHER*					
34	TG3601	0UN668	HABILLAGE ARRIERE FG16	*REAR CASING*					
35	FR4056	0UN462	VIS SPECIAL COTE	*SIDE SCREW*					
36	50118	0UNA64	VIS TH M4X10 INOX	*S.STEEL SCREW M4X10*					

Note : No code → unavailable for spare parts

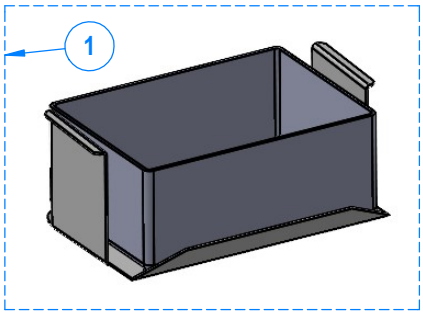

IMAGES NON CONTRACTUELLES
NON-CONTRACTUAL PICTURES

09/24	**KITS TECHNICIEN XP** *TECHNICIAN TOOLS KIT*	692

PLANCHE - PLATE 692

Pos.	Fact. code	Code	Description FR	*Description GB*	V	W&T	REF.	NOTES	S/N BREAK
1	NA1090	0UNJJC	KIT PESEE XP	*WEIGHING KIT XP*					
2	NA1104	0UNJJU	Kit Plateau SOLO XP	*SOLO XP Tray Kit*			e;f;i;n;o;p;q;r;s;t;u;v;w;e1;f1;g1		
3	FR1550	0UN225	KIT JOINT PLATEAU	*PLATE GASKETS KIT*					
4	FR1560	0UN001	KIT REFECTION GROUPE TANGO	*TANGO GROUP REBUILT KIT*			a;b;c;d;g;h;j;k;l;m;x;y;z;a1;b1;c1;d1		
5	FR1919	0UNA9P	KIT RENOVATION PISTON 24 FENT	*PISTON REBUILT KIT*			e;f;i;n;o;p;q;r;s;t;u;v;w;e1;f1;g1		
6	FR1948	0UN196	KIT RENOVATION PISTON 48 FENTE	*PISTON REBUILT KIT*					
7	26124	0UNBZO	GOUPILLON NETTOYAGE	*CLEANING BRUSH*					
8	0SPO27	0SPO27	U01 PASTILLES DE NETTOYAGE MACHINE AUTO	*U01 CLEANING TABS F/ESPR. MACH*					
9	0SPO29	0SPO29	U03 DETERGENT SYSTÈME LAIT 1LT	*U03 MILK FROTHER CLEANER*			b;d;f;h;i;m;o;q;t;w;z;c1;d1		
10	54212	0UN220	PICHET 2000 ML gradué, en polyproprylène	*JUG 2000 ML gradual, in polypropylene*			b;d;f;h;i;m;o;q;t;w;z;c1;d1		
11	84235	0UN092	GRAISSE IKV-FLUOR	*GREASE IKV-FLUOR MPA 0 H -BOX 100 g*					
12	54260	0UNBFZ	VERRE DOSEUR GRADUE 100ML	*100ML GRADUED GLASS*					

Note : No code → unavailable for spare parts