# Spare parts List

## Reservdelslista

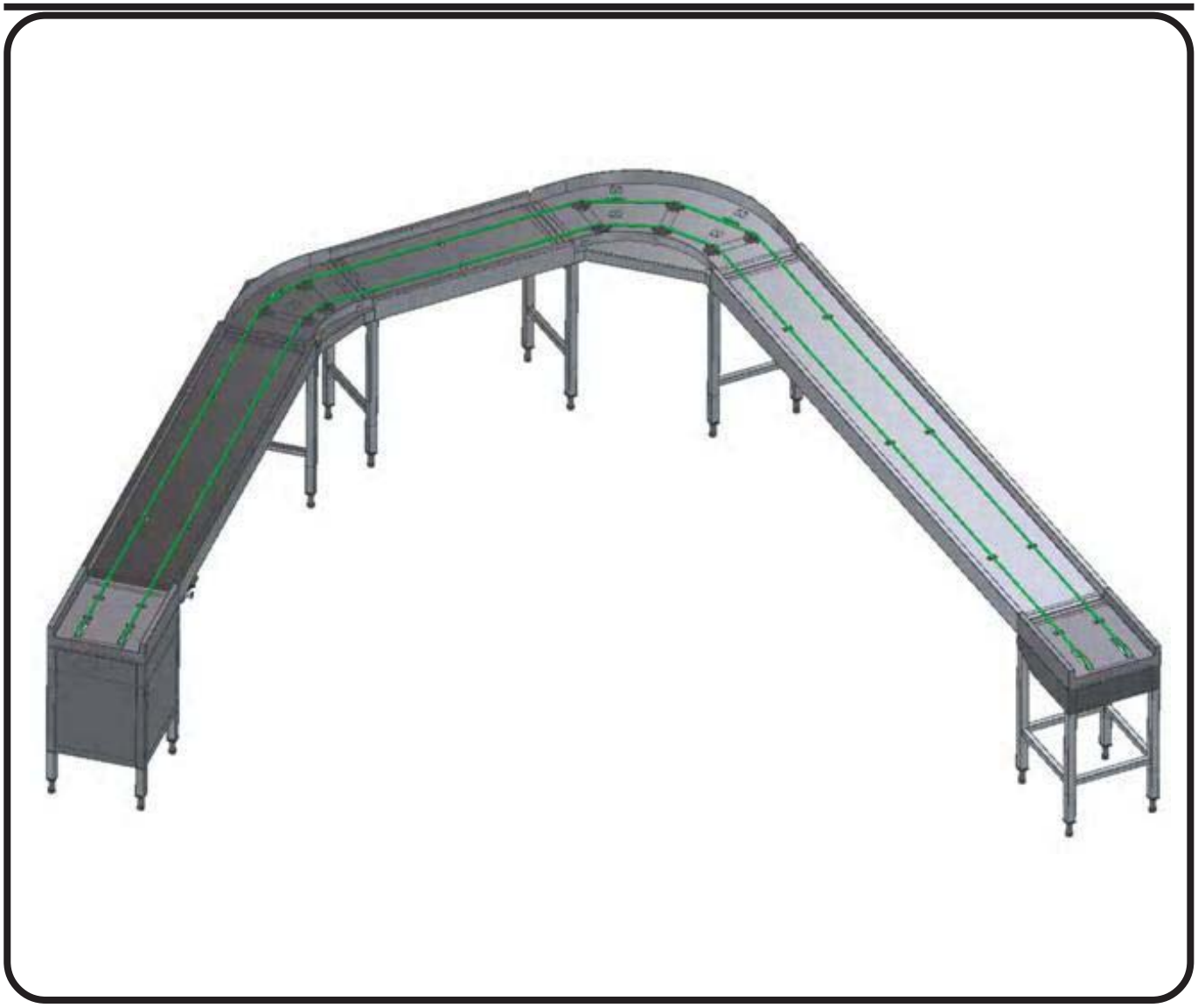

# Bricktransportör

Cord conveyor for trays

DOC. NO. **ST0 3249-60**
EDITION **3** 2009.11

SV


- **Drivstation** 4-7
- **Centralstation** 8-10
- **El-skåp** 11-12
- **Kurva 45°** 13
- **Kurva 90°** 14-15
- **Rakdel** 16
- **Sorteringsdel** 17
- **Vändstation** 18
- **Sorteringstopp** 19
- **Tombricksindikator** 20


EN

## TABLE OF CONTENTS

**Page**


- **Drive unit** 4-7
- **Central drive unit** 8-10
- **Electrical cabint** 11-12
- **Curve 45°** 13
- **Curve 90°** 14-15
- **Cord conveyor** 16
- **Cord conveyor sortering** 17
- **Return unit** 18
- **Sortering top** 19
- **Indicator, empty tray** 20

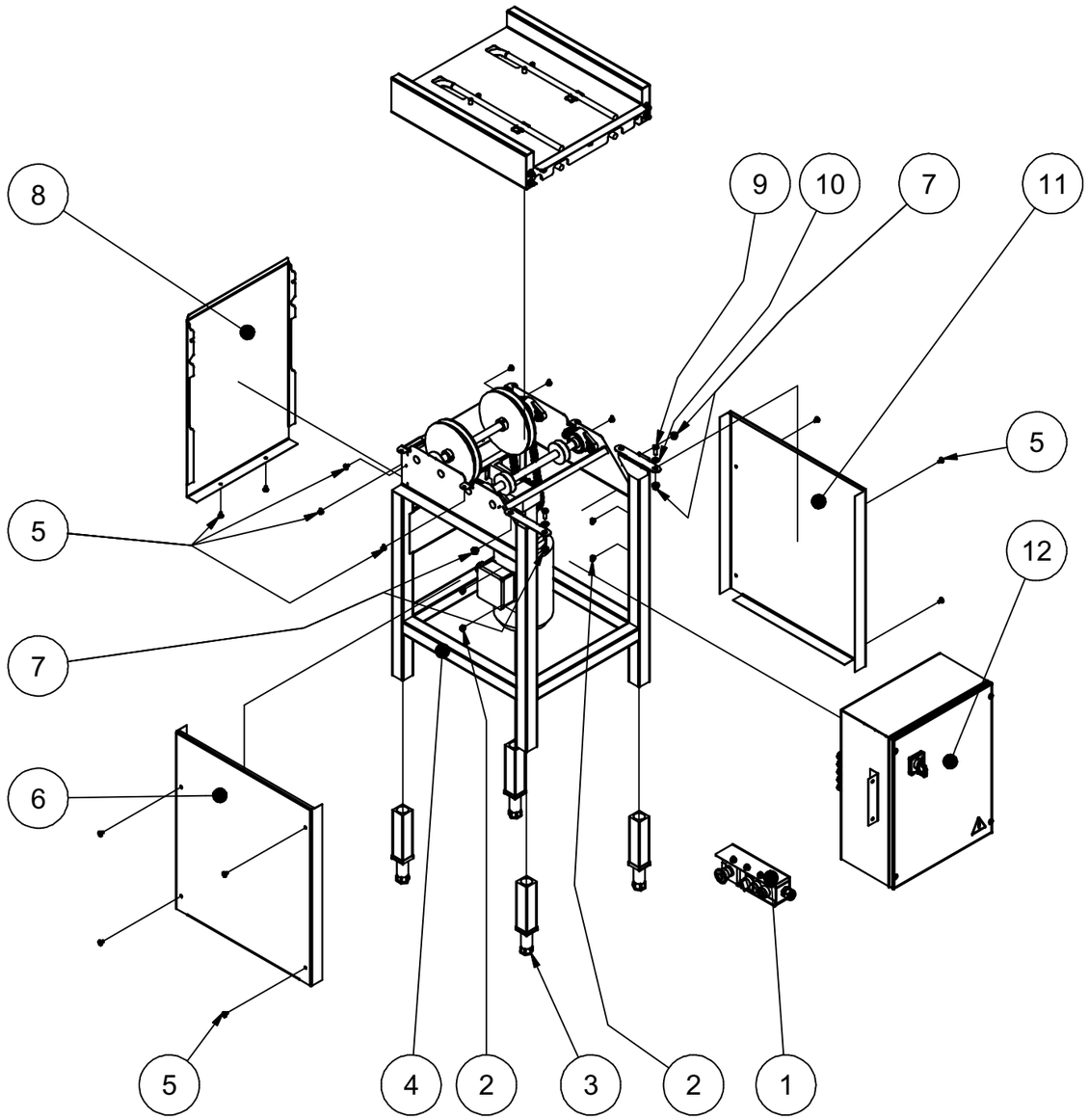


| Pos. | Art. No. | Description |
|---|---|---|
| 12 | 491 41 63-00 | Electrical cabinet cpl. |
| 11 | ST0 46 47-01 | Side cover RH |
| 10 | 734 11 64-09 | Washer 8,4x17x1,6 |
| 9 | 725 24 51-40 | M6S 8x20 |
| 8 | ST0 46 55-00 | Front cover |
| 7 | 552 21 21-04 | Flange nut M8 |
| 6 | ST0 46 47-00 | Side cover LH |
| 5 | 552 30 01-23 | LSKS M5x10 |
| 4 | ST0 46 39-00 | Stand cpl. |
| 3 | ST0 33 76-00 | Foot cpl. |
| 2 | 552 21 21-03 | Flange nut M6 |
| 1 | 491 42 74-00 | Control box |

Prod.no.
9F865130-00 Drive unit

Edition 1 Date 2007-03

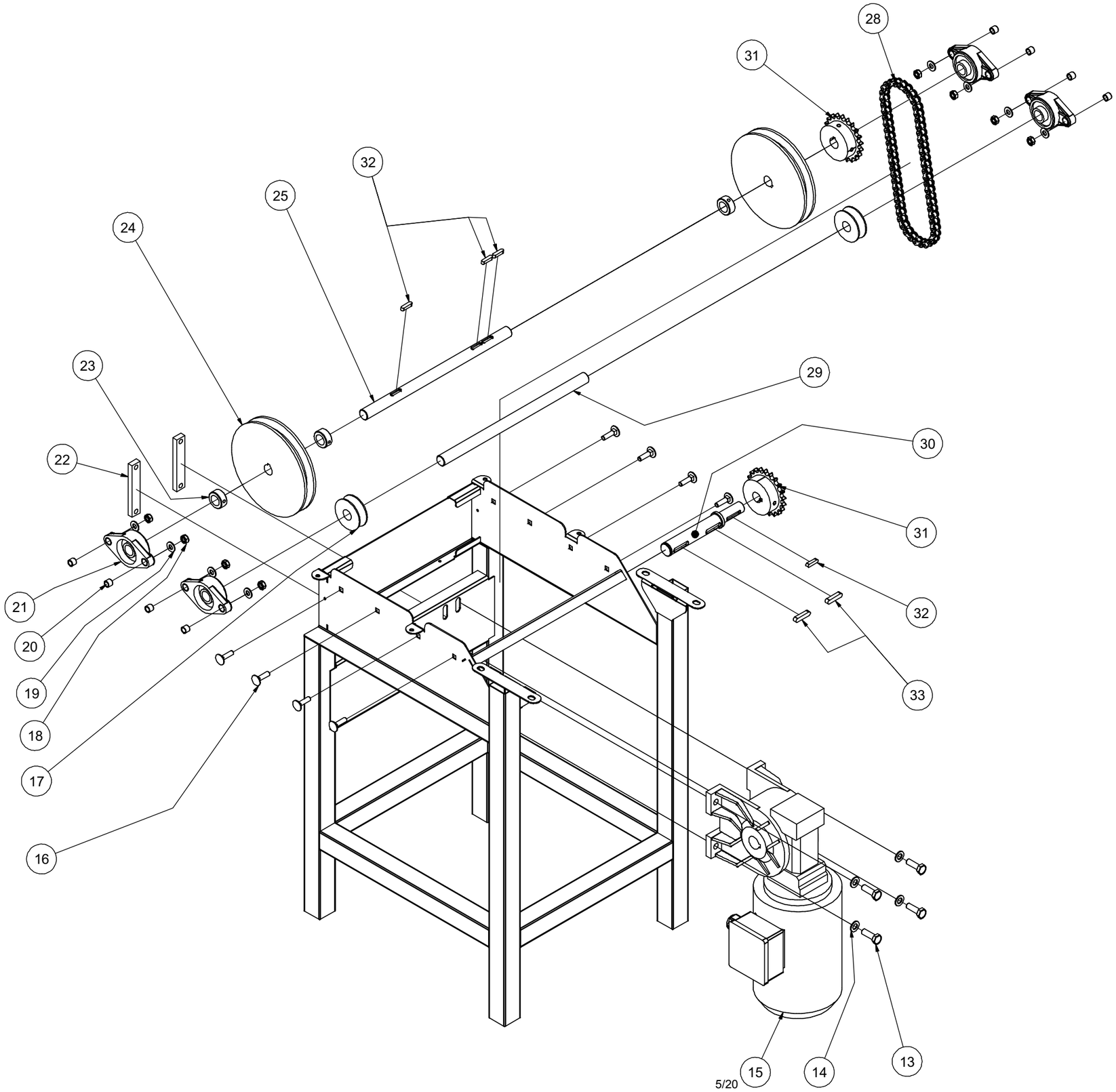


| | | |
|---|---|---|
| 33 | 735 93 02-40 | Key 8x7x36 |
| 32 | 735 9232-40 | Key 6x6x25 |
| 31 | 491 35 50-00 | Sprocker 1/2" Z=21 |
| 30 | 491 41 27-00 | Motor shaft |
| 29 | ST0 46 76-00 | Shaft |
| 28 | 491 38 33-00 | Chain |
| 25 | ST0 46 46-00 | Shaft |
| 24 | ST0 47 05-00 | Cord wheel |
| 23 | 4823708-00 | Retaining ring |
| 22 | 491 41 67-00 | Motor attachemnt |
| 21 | 491 35 47-00 | Flange bushing |
| 20 | ST0 35 91-00 | Spacer pipe |
| 19 | 734 11 64-09 | Washer 8,4x17x1,6 |
| 18 | 731 23 18-40 | M6M 8 |
| 17 | ST0 44 81-00 | Cord wheel |
| 16 | 727 64 55-40 | MVBF 8x30 |
| 15 | 520 69 40-00 | Motor |
| 14 | 734 11 73-09 | BRB 10,5x20x1,8 |
| 13 | 725 24 95-40 | M6S M10x30 |
| Pos. | Art. No. | Description |

Prod.no.
9F865130-00 Drive unit

Edition 1 Date 2007-03

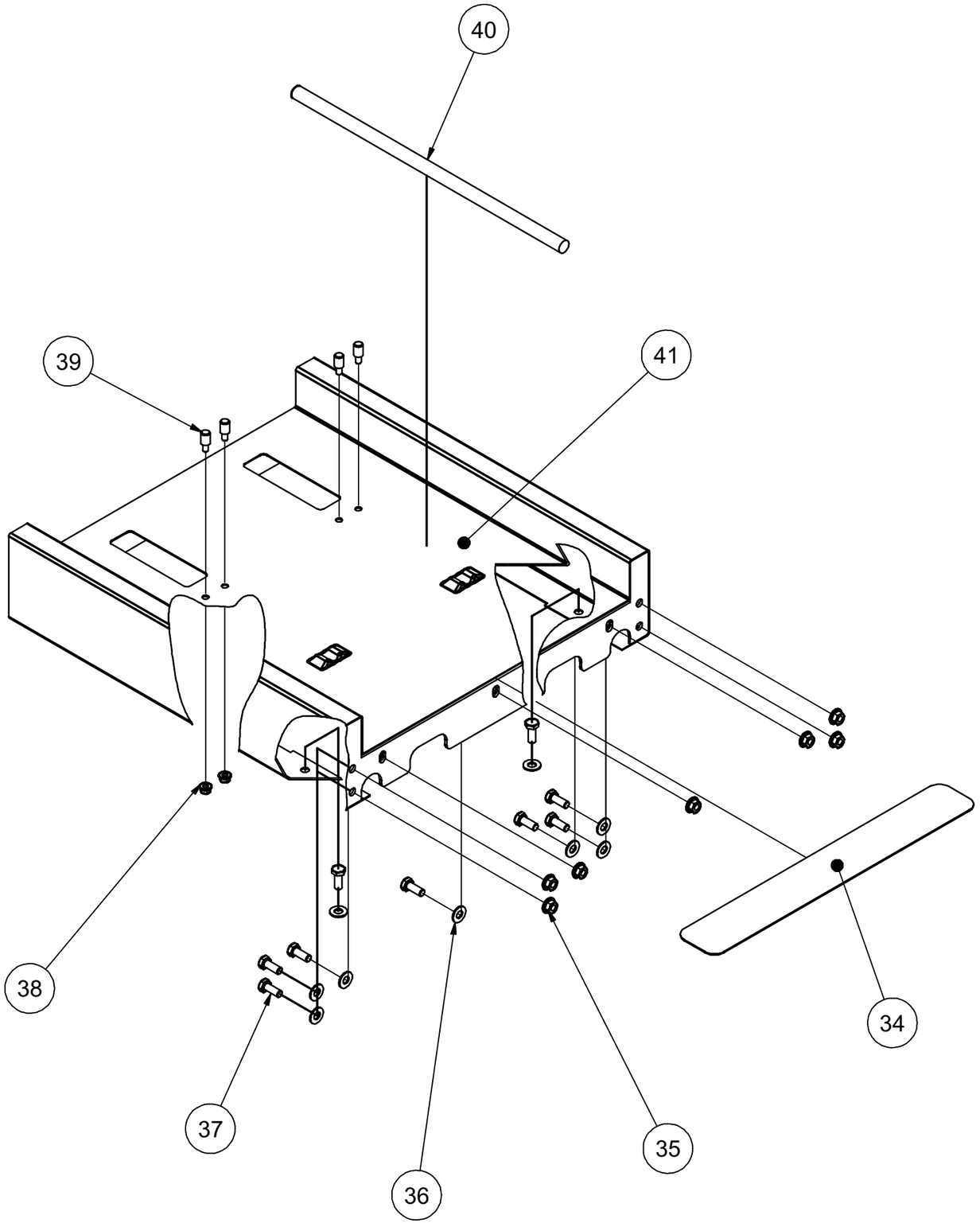


| | | |
|---|---|---|
| 41 | ST0 46 53-00 | Track assy. |
| 40 | 491 36 82-00 | Cord |
| 39 | 491 42 26-00 | Safety pin |
| 38 | 552 21 21-03 | Flange nut M6 |
| 37 | 725 24 51-40 | M6S 8x20 |
| 36 | 734 11 64-09 | Washer 8,4x17x1,6 |
| 35 | 552 21 21-04 | Flange nut M8 |
| 34 | ST0 46 62-00 | Support |
| Pos. | Art. No. | Description |

Prod.no.
9F865130-00 Drive unit

Edition 1 Date 2007-03

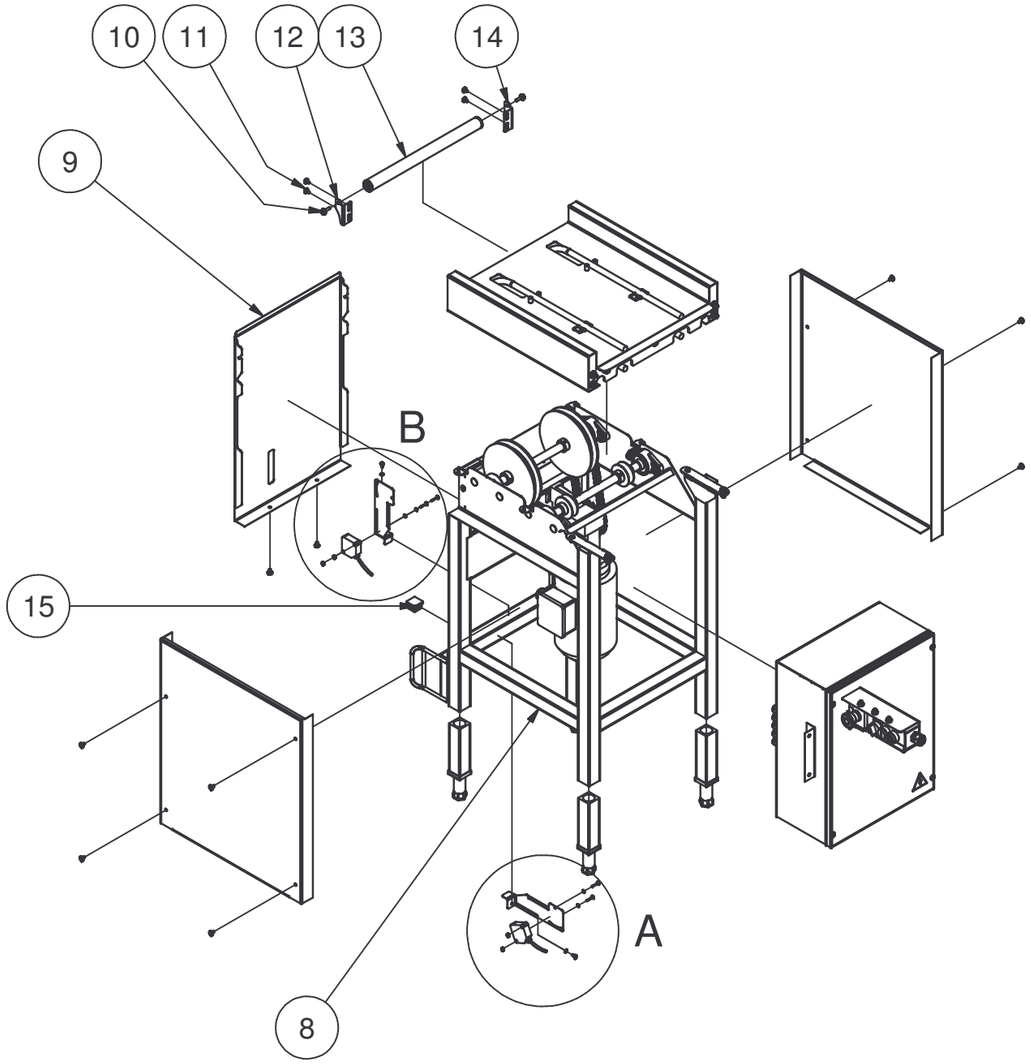


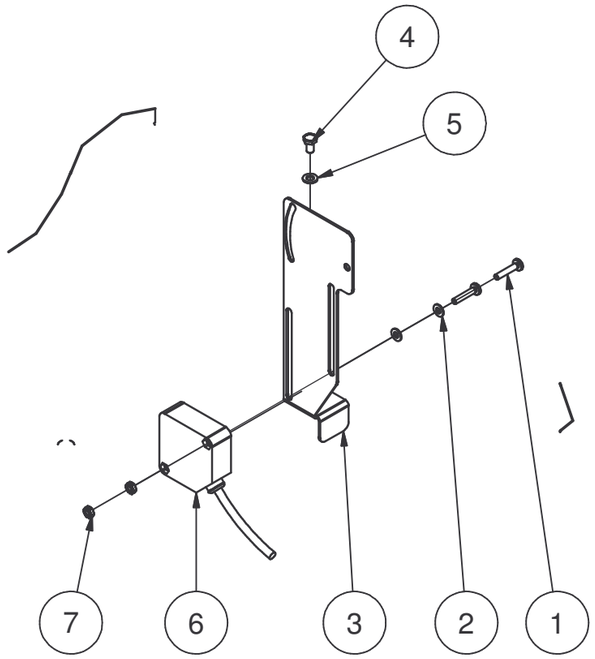


B

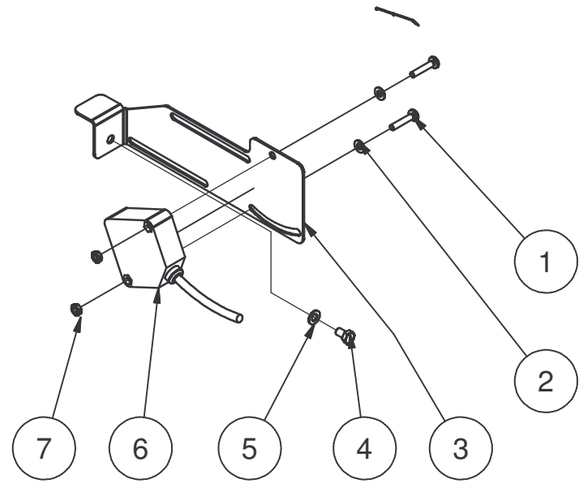


A

| | | |
|---|---|---|
| 15 | 477 65 41-03 | Plug 30x30 |
| 14 | ST0 61 42-00 | Bracket, Left |
| 13 | ST2 04 68-00 | Pulley Ø30, M6, L=400 |
| 12 | ST0 61 43-00 | Bracket, Right |
| 11 | 552 30 01-23 | LSKS M5x10 |
| 10 | 552 30 03-00 | M6SF 6x20 Rfr |
| 9 | ST0 61 41-00 | Front cover |
| 8 | ST0 60 85-00 | Stand cpl., tray unloading |
| 7 | 731 23 12-40 | M6M M4 |
| 6 | ST0 69 60-00 | Photoelectric sensor |
| 5 | 734 11 46-09 | Bricka 5,3x10 |
| 4 | 725 23 23-40 | M6S M5x8 Rfr |
| 3 | ST0 61 45-00 | Sensor bracket |
| 2 | 734 11 36-09 | BRB 4,3x9x0,8 |
| 1 | 724 12 95-40 | MRX M4 x 20 |
| Pos. | Art. No. | Description |

Prod.no.
9F865131-00 Drive unit with tray unloading

Edition 3 Date 2008-01

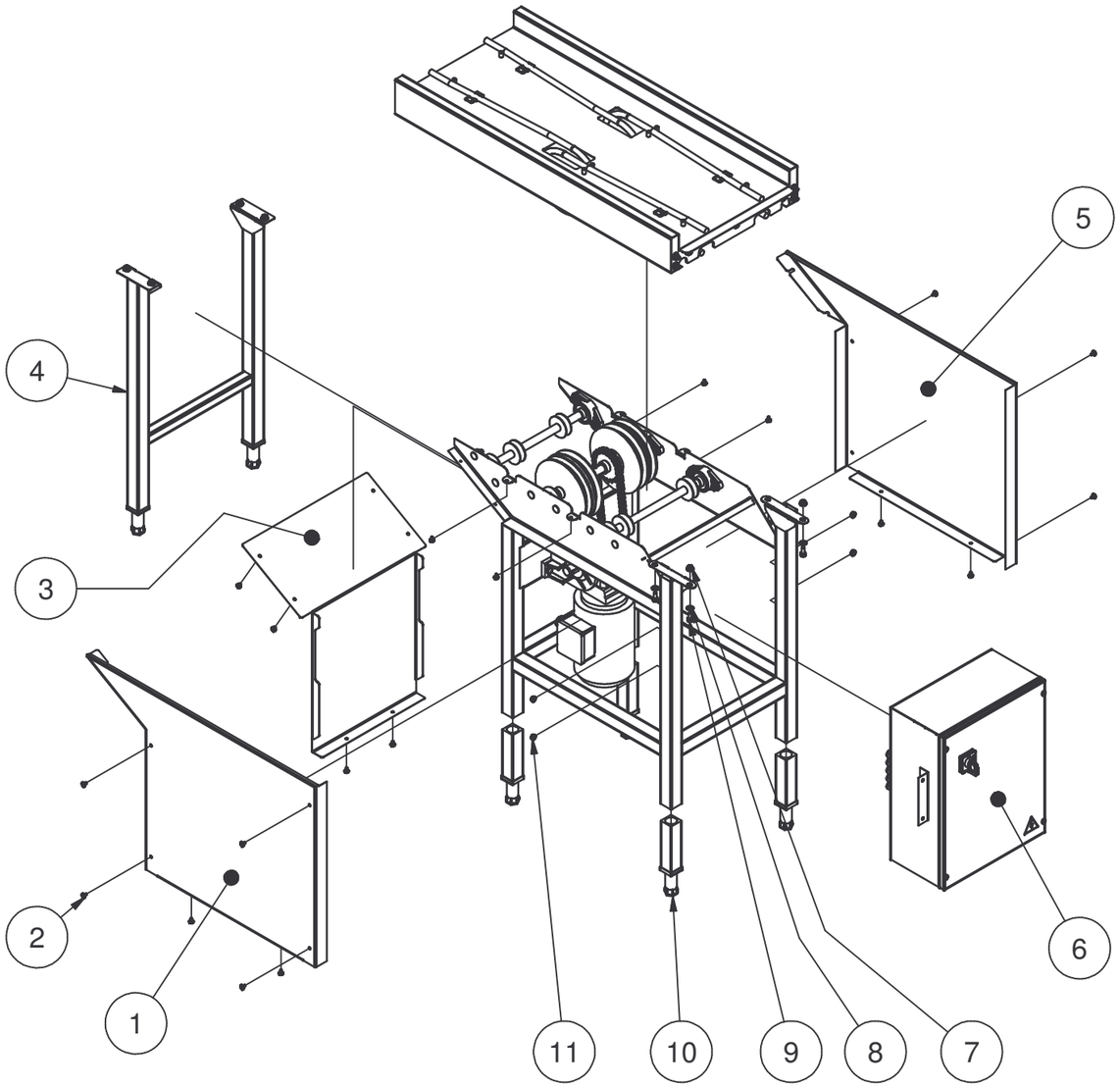


| Pos. | Art.No. | Description |
|---|---|---|
| 11 | 552 21 21-03 | Flange nut M6 Rfr |
| 10 | ST0 33 76-00 | Foot cpl. |
| 9 | 725 24 49-40 | M6S M8x16 |
| 8 | 734 11 64-09 | Washer 8,4x17x1,6 |
| 7 | 552 21 21-04 | Flange nut M8 |
| 6 | 491 41 63-00 | Electrical cabinet cpl. |
| 5 | ST0 60 64-00 | Side cover LH |
| 4 | ST0 61 40-00 | Stand, tray slide |
| 3 | ST0 60 65-00 | Front cover |
| 2 | 552 30 01-23 | LSKS M5x10 |
| 1 | ST0 60 64-01 | Side cover RH |

Prod.no.
9F865132-00 Central drive unit

Edition 1 Date 2007-03

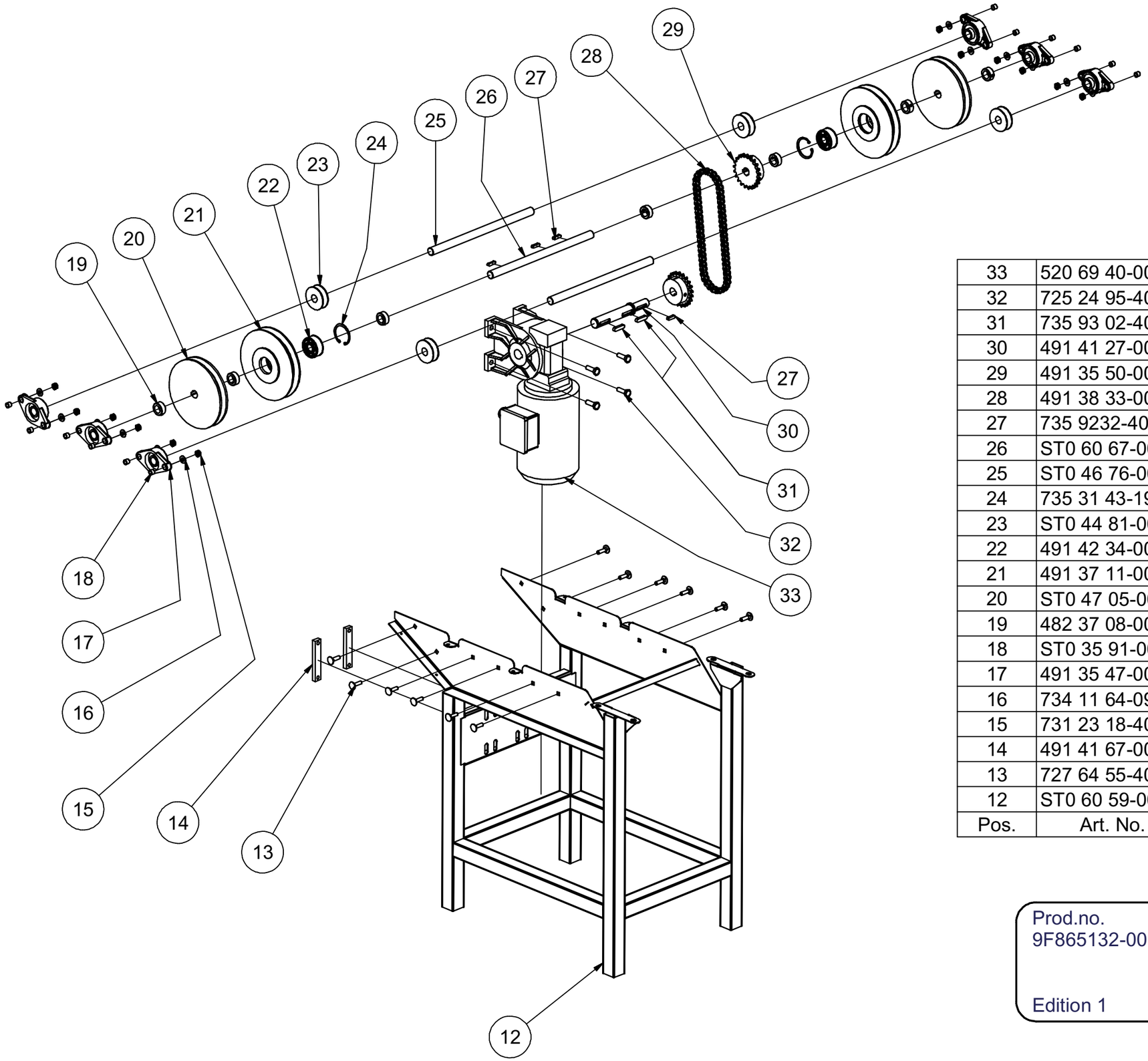


| Pos. | Art. No. | Description |
|---|---|---|
| 33 | 520 69 40-00 | Motor |
| 32 | 725 24 95-40 | M6S M10x30 |
| 31 | 735 93 02-40 | Wedge 8x7x36 |
| 30 | 491 41 27-00 | Motor shaft |
| 29 | 491 35 50-00 | Sprocket 1/2" Z=21 |
| 28 | 491 38 33-00 | Chain |
| 27 | 735 9232-40 | Wedge 6x6x25 |
| 26 | ST0 60 67-00 | Shaft |
| 25 | ST0 46 76-00 | Shaft |
| 24 | 735 31 43-19 | Circlip SgH52 |
| 23 | ST0 44 81-00 | Cord wheel |
| 22 | 491 42 34-00 | Bushing |
| 21 | 491 37 11-00 | Cord wheel |
| 20 | ST0 47 05-00 | Cord wheel |
| 19 | 482 37 08-00 | Retaining ring |
| 18 | ST0 35 91-00 | Spacer pipe |
| 17 | 491 35 47-00 | Bushing |
| 16 | 734 11 64-09 | Washer 8,4x17x1,6 |
| 15 | 731 23 18-40 | M6M 8 |
| 14 | 491 41 67-00 | Motor attachemnt |
| 13 | 727 64 55-40 | MVBF 8x30 |
| 12 | ST0 60 59-00 | Stand cpl. |

Prod.no.
9F865132-00 Central drive unit

Edition 1 Date 2007-03

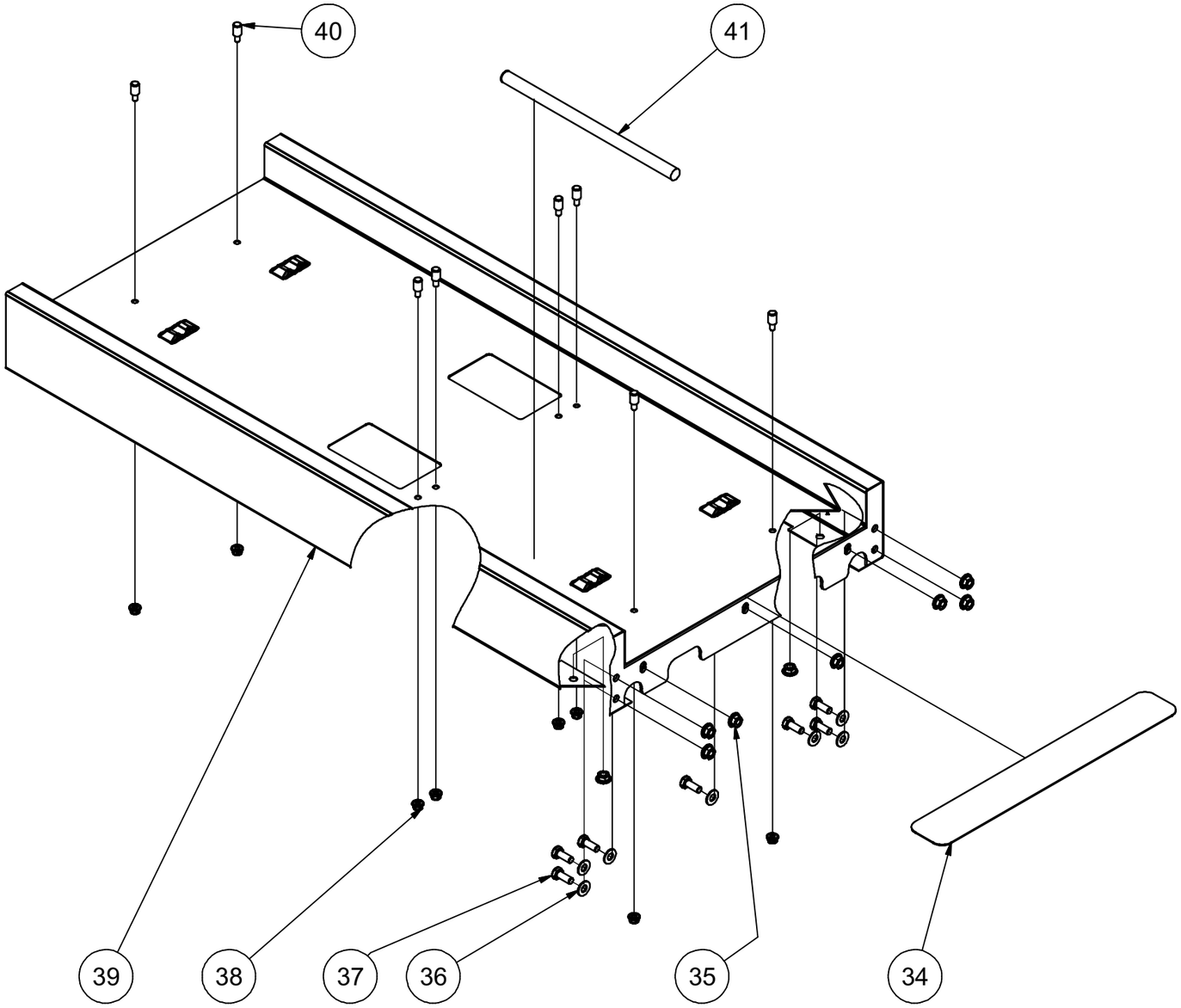


| Pos. | Art. No. | Description |
|---|---|---|
| 41 | 491 36 82-00 | Cord |
| 40 | 491 42 26-00 | Saftey pin |
| 39 | ST0 60 60-00 | Track assy. |
| 38 | 552 21 21-03 | Flange nut M6 |
| 37 | 725 24 51-40 | M6S 8x20 |
| 36 | 734 11 64-09 | Washer 8,4x17x1,6 |
| 35 | 552 21 21-04 | Flange nut M8 |
| 34 | ST0 46 62-00 | Support |

Prod.no.
9F865132-00 Central drive unit

Edition 1 Date 2007-03

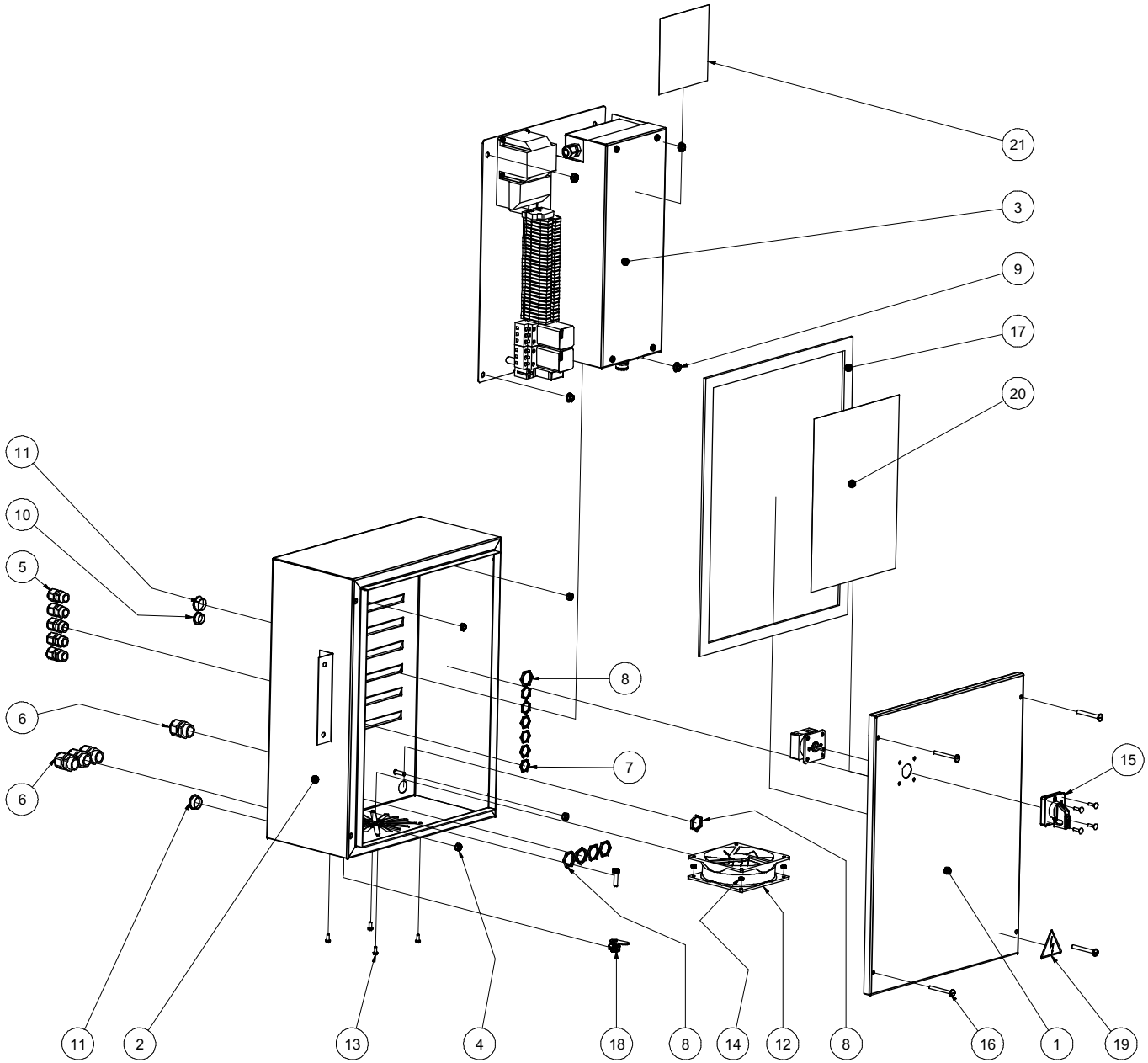


| Pos. | Art.No. | Description |
|---|---|---|
| 21 | 491 43 70-00 | Sign, supply voltage |
| 20 | 499 71 28-00 | Electrical diagram |
| 19 | 552 21 61-00 | Warning plate |
| 18 | 490 16 65-00 | Ekvipotential screw |
| 17 | 873 30 32-40 | Sealing strip 20x4,2 |
| 16 | 552 30 01-31 | LSKS M5x50 |
| 15 | 491 41 59-00 | Safety switch |
| 14 | 731 23 12-40 | M6M M4 |
| 13 | 724 12 89-40 | MRX 4x10 |
| 12 | 477 97 11-00 | 120 x 120 x 38 DC Fan |
| 11 | ST0 32 90-03 | Blind plug M20x1.5 |
| 10 | ST0 32 90-02 | Blind plug M16x1.5 |
| 9 | 552 21 21-03 | Flange nut M6 Rfr |
| 8 | ST0 28 64-03 | Nut M20x1.5 |
| 7 | ST0 28 64-02 | Nut M16x1.5 |
| 6 | ST0 31 45-10 | Cable gland M20 |
| 5 | ST0 31 45-09 | Cable gland M16 |
| 4 | 731 23 16-40 | M6M 6 |
| 3 | 491 41 37-00 | Mounting plate kpl. |
| 2 | 491 41 35-00 | Electrical cabinet cpl. |
| 1 | 491 39 67-00 | Door, electrical cabinet |

Prod.no.
491 41 63-00 Electrical cabinet cpl.

Edition 1 Date 2007-03

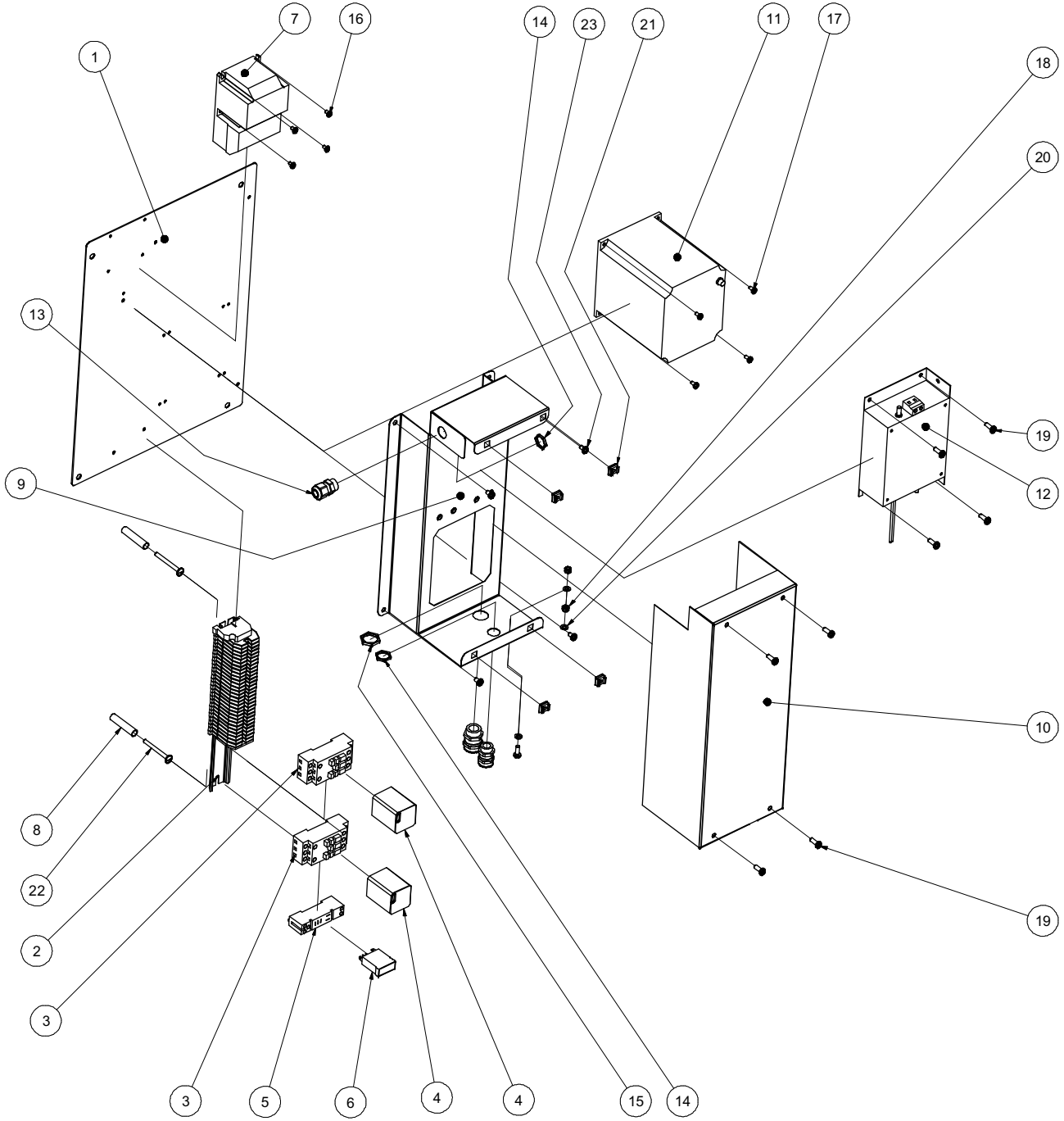


| Pos. | Art. No. | Description |
|---|---|---|
| 25 | ST0 36 56-01 | Cable gland M16x1,5 EMC |
| 24 | ST0 36 56-02 | Cable gland M20x1,5 EMC |
| 23 | 724 13 23-40 | MRX 5x8 |
| 22 | 552 30 01-31 | LSKS M5x50 |
| 21 | 552 20 25-00 | Cage nut M5 |
| 20 | 734 11 46-09 | Washer 5,3x10 |
| 19 | 724 13 28-40 | MRX 5x14 |
| 18 | 731 23 14-40 | M6M 5 |
| 17 | 724 12 87-40 | MRX 4 x 8 |
| 16 | 724 12 85-40 | MRX 4 x 6 |
| 15 | ST0 28 64-03 | Nut M20x1.5 |
| 14 | ST0 28 64-02 | Nut M16x1.5 |
| 13 | ST0 31 45-09 | Cable gland M16 |
| 12 | 428 09 22-00 | Filter |
| 11 | ST0 28 47-00 | Converter |
| 10 | 520 64 70-00 | Shielding, casing |
| 9 | 520 64 69-00 | Shielding, bottom |
| 8 | 520 27 97-00 | Distance |
| 7 | 491 41 38-00 | Transformer 24 VAC |
| 6 | ST0 59 92-00 | Relay, 1-pol, C10-A10X24A |
| 5 | ST0 59 91-00 | Socket 1-pol S10 |
| 4 | 552 21 22-01 | Relay 3-pol 24V |
| 3 | 552 21 22-00 | Socket 3-pol relay |
| 2 | 491 41 60-00 | Terminal block cpl. |
| 1 | 491 39 69-00 | Mounting plate |

Prod.no.
491 41 37-00 Mounting plate cpl.

Edition 1 Date 2007-03

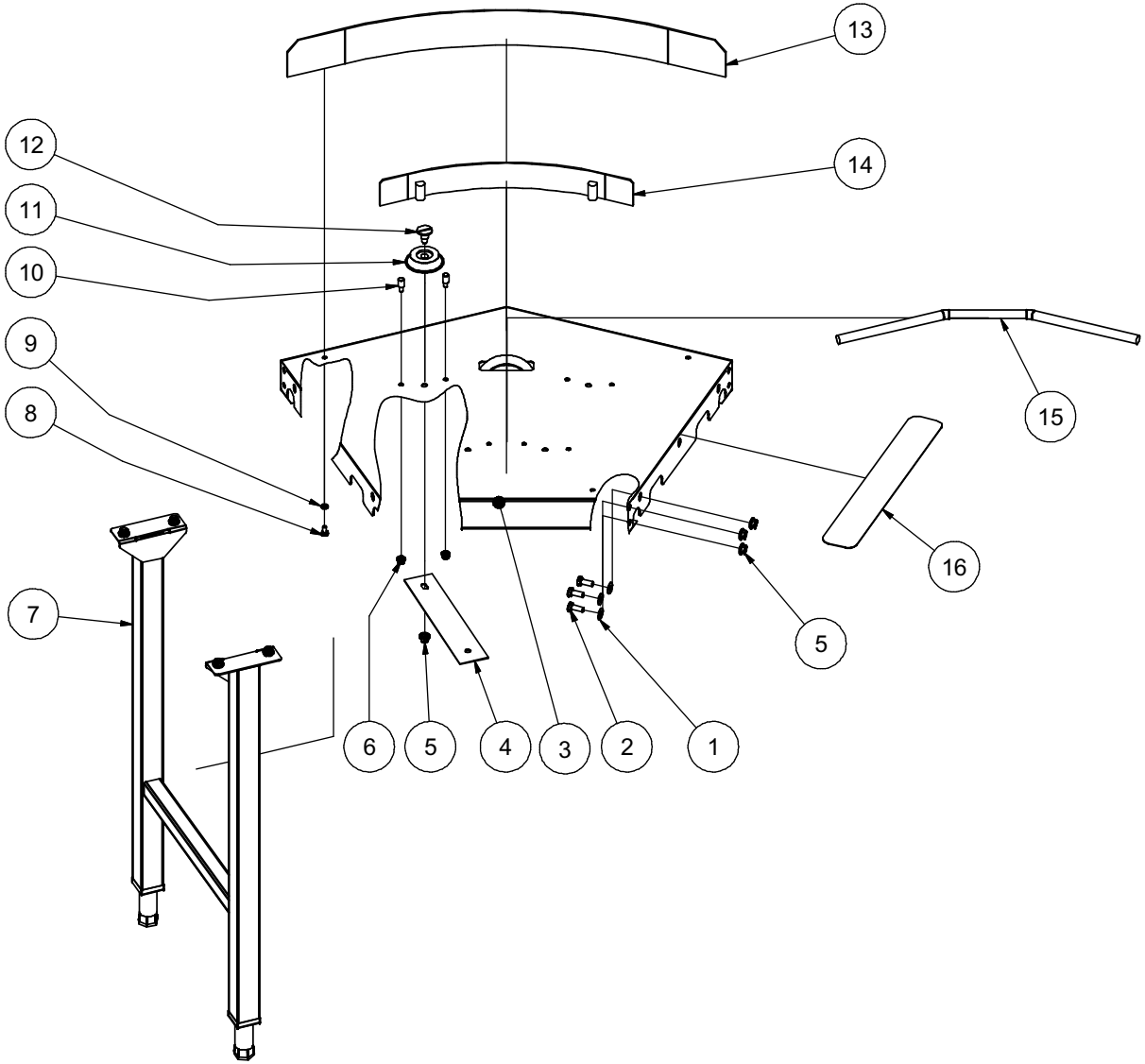


| Pos. | Art. No. | Description |
|---|---|---|
| 16 | ST0 46 62-00 | Support |
| 15 | 491 36 82-00 | Cord |
| 14 | 491 35 58-00 | Guide, inner |
| 13 | 491 35 57-00 | Guide, outer |
| 12 | ST0 48 76-00 | Shouldred screw |
| 11 | ST0 48 75-00 | Curve wheel |
| 10 | 491 42 26-00 | Safety pin |
| 9 | 734 11 53-09 | BRB 6,4x12x1,5 |
| 8 | 725 23 64-40 | M6S 6x10 |
| 7 | ST0 61 40-00 | Stand, tray slide |
| 6 | 552 21 21-03 | Flange nut M6 |
| 5 | 552 21 21-04 | Flange nut M8 |
| 4 | 491 39 77-00 | Reinforcement |
| 3 | ST0 48 01-00 | Track 45° curve cpl. |
| 2 | 725 24 51-40 | M6S 8x20 |
| 1 | 734 11 64-09 | Washer 8,4x17x1,6 |

Prod.no.
9F865129-00 Curve 45°

Edition 1 Date 2007-03

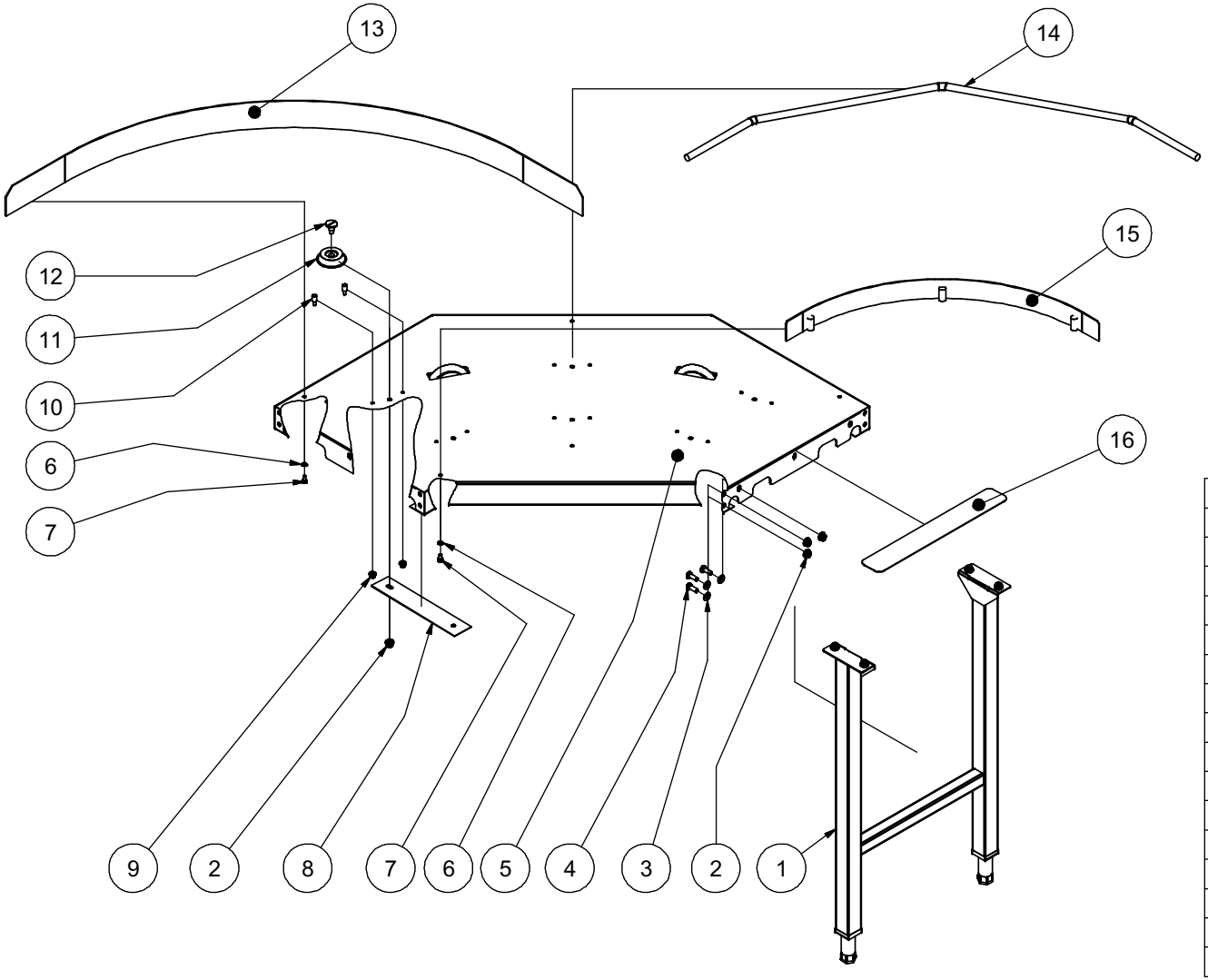


| Pos. | Art. No. | Description |
|---|---|---|
| 16 | ST0 46 62-00 | Support |
| 15 | 491 39 73-00 | Guide, inner |
| 14 | 491 36 82-00 | Cord |
| 13 | 491 39 72-00 | Guide, outer |
| 12 | ST0 48 76-00 | Shouldred screw |
| 11 | ST0 48 75-00 | Curve wheel |
| 10 | 491 42 26-00 | Safety pin |
| 9 | 552 21 21-03 | Flange nut M6 |
| 8 | 491 39 77-00 | Reinforcement |
| 7 | 725 23 64-40 | M6S 6x10 |
| 6 | 734 11 53-09 | Washer 6,4x12x1,5 |
| 5 | ST0 47 32-00 | Track 90° curve cpl. |
| 4 | 725 24 51-40 | M6S 8x20 |
| 3 | 734 11 64-09 | Washer 8,4x17x1,6 |
| 2 | 552 21 21-04 | Flange nut M8 |
| 1 | ST0 61 40-00 | Stand, tray slide |

Prod.no.
9F865128-00 Curve 90°

Edition 1 Date 2007-03

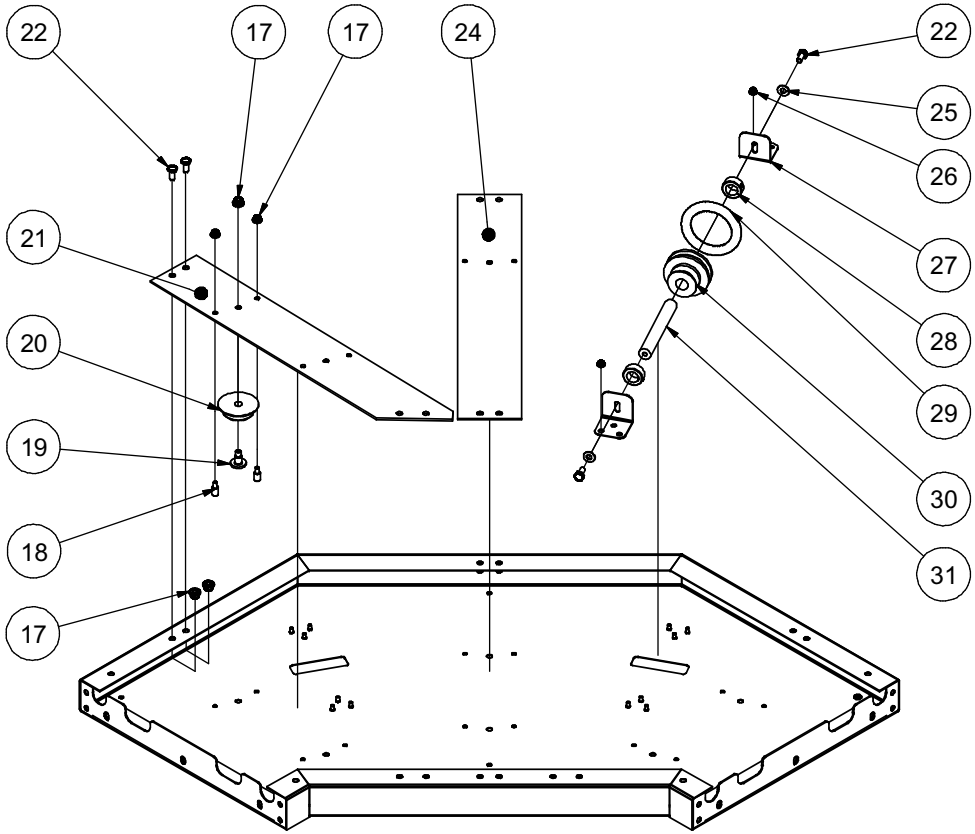


| | | |
|---|---|---|
| 31 | 482 34 95-00 | Shaft |
| 30 | 491 38 95-00 | Outer wheel |
| 29 | 491 39 75-00 | Cord ring |
| 28 | 482 37 08-00 | Rataining Ring |
| 27 | ST0 60 50-00 | Shaft attachment |
| 26 | 552 21 21-02 | Flange nut M5 |
| 25 | 734 11 64-09 | Washer 8,4x17x1,6 |
| 24 | 491 36 80-00 | Tiebar, long |
| 17 | 552 21 21-03 | Flange nut M6 |
| 22 | 725 24 49-40 | M6S M8x16 |
| 21 | 491 36 49-00 | Tiebar, short |
| 20 | ST0 48 75-00 | Curve wheel |
| 19 | ST0 48 76-00 | Shouldred screw |
| 18 | 491 42 26-00 | Safety pin |
| 17 | 552 21 21-04 | Flange nut M8 |
| Pos. | Art. No. | Description |

Prod.no.
9F865128-00 Curve 90°

Edition 1 Date 2007-03

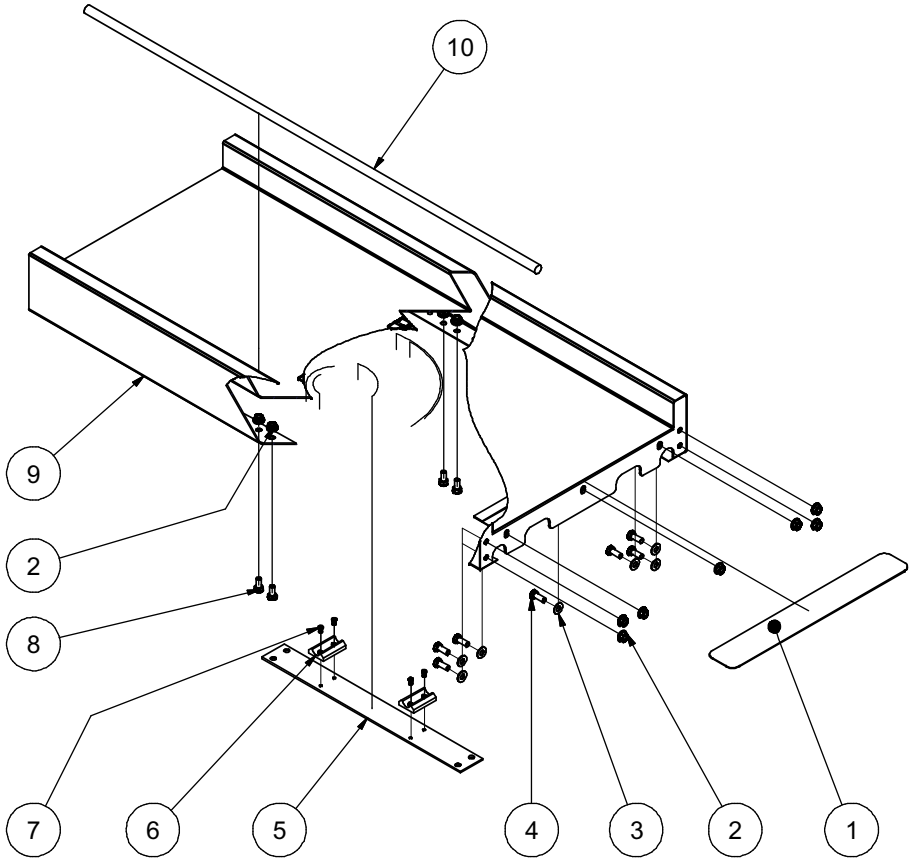


| Pos. | Art. No. | Description |
|---|---|---|
| 10 | 491 36 82-00 | Cord |
| 9 | ST0 46 57-02 | Track cpl. L=3000 |
| 9 | ST0 46 57-01 | Track cpl. L=2000 |
| 9 | ST0 46 57-00 | Track cpl. L=1000 |
| 8 | 725 24 49-40 | M6S M8x16 |
| 7 | 552 21 02-01 | Blind rivet 4x10 |
| 6 | 491 37 45-00 | Cord guide |
| 5 | 491 37 44-00 | Tie bar |
| 4 | 725 24 51-40 | M6S 8x20 |
| 3 | 734 11 64-09 | Washer 8,4x17x1,6 |
| 2 | 552 21 21-04 | Flange nut M8 |
| 1 | ST0 46 62-00 | Support |

| Prod.no. | |
|---|---|
| 9F865122-00 | Cord conveyor tray L=1000 |
| 9F865123-00 | Cord conveyor tray L=2000 |
| 9F865124-00 | Cord conveyor tray L=3000 |
| Edition 1 | Date 2007-03 |

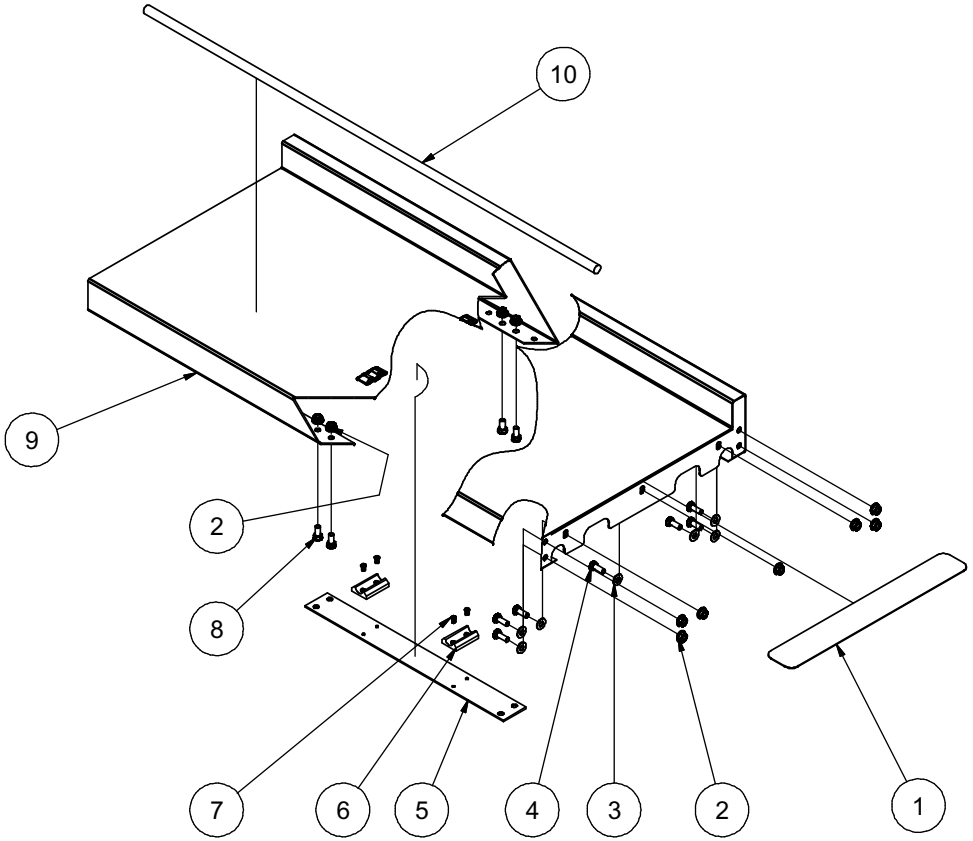


| Pos. | Art. No. | Description |
|---|---|---|
| 10 | 491 36 82-00 | Cord |
| 9 | ST0 48 67-02 | Sorting Track cpl. L=3000 |
| 9 | ST0 48 67-01 | Sorting Track cpl. L=2000 |
| 9 | ST0 48 67-00 | Sorting Track cpl. L=1000 |
| 8 | 725 24 49-40 | M6S M8x16 |
| 7 | 552 21 02-01 | Blind rivet 4x10 |
| 6 | 491 37 45-00 | Cord guide |
| 5 | 491 37 44-00 | Tie bar |
| 4 | 725 24 51-40 | M6S 8x20 |
| 3 | 734 11 64-09 | Washer 8,4x17x1,6 |
| 2 | 552 21 21-04 | Flange nut M8 |
| 1 | ST0 46 62-00 | Support |

Prod.no.

| | |
|---|---|
| 9F865125-00 | Cord conveyor tray, sorting L=1000 |
| 9F865126-00 | Cord conveyor tray, sorting L=2000 |
| 9F865127-00 | Cord conveyor tray, sorting L=3000 |

Edition 1 Date 2007-03

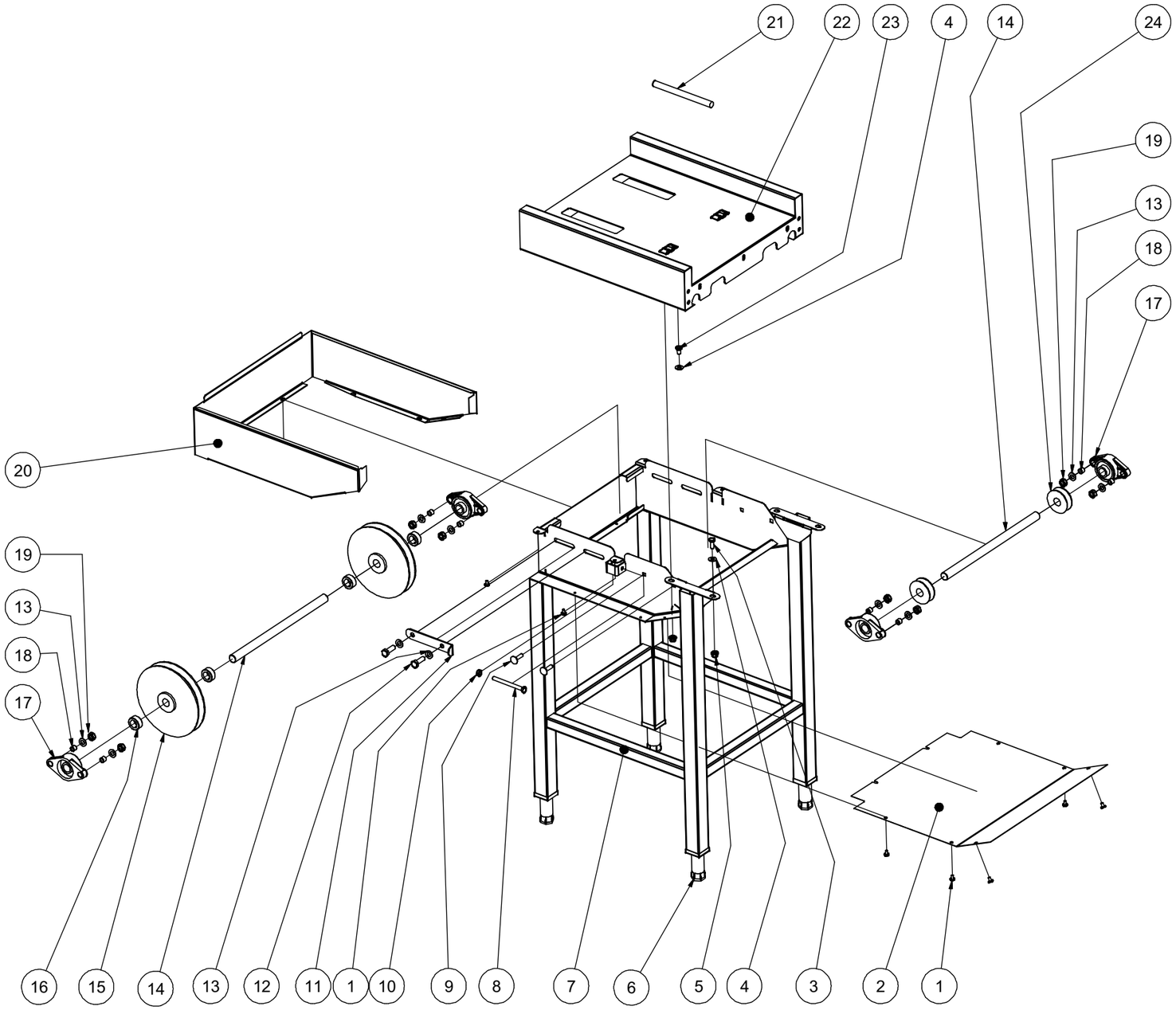


| Pos. | Art. No. | Description |
|---|---|---|
| 24 | ST0 44 81-00 | Cord wheel |
| 23 | 725 24 47-40 | M6S M8x12 |
| 22 | ST0 46 77-00 | Track |
| 21 | 491 36 82-00 | Cord |
| 20 | ST0 59 88-00 | Cover, return unit |
| 19 | 731 23 20-40 | M6M 10 Rfr |
| 18 | ST0 35 91-00 | Spacer pipe |
| 17 | 491 35 47-00 | Flänslager FYTBKC 20NTH |
| 16 | 482 37 08-00 | Stoppring |
| 15 | ST0 45 62-00 | Cord wheel |
| 14 | ST0 46 76-00 | Shaft |
| 13 | 734 11 73-09 | BRB 10,5x20x1,8 |
| 12 | 725 24 95-40 | M6S M10x30 |
| 11 | ST0 59 89-00 | Tension plate |
| 10 | 7312318-40 | M6M 8 |
| 9 | 727 64 55-40 | MVBF 8x30 Rfr |
| 8 | 725 24 69-45 | M6S 8x90 Rfr |
| 7 | ST0 46 75-00 | Stand cpl, return unit |
| 6 | ST0 33 76-00 | Foot cpl. |
| 5 | 552 21 21-04 | Flänsmutter M8 |
| 4 | 734 11 64-09 | Bricka 8,4x17x1,6 |
| 3 | 725 24 51-40 | M6S 8x20 |
| 2 | ST0 46 81-00 | Cover |
| 1 | 552 30 01-23 | LSKS M5x10 |

Prod.no.
9F865133-00 Return unit

Edition 1 Date 2007-03

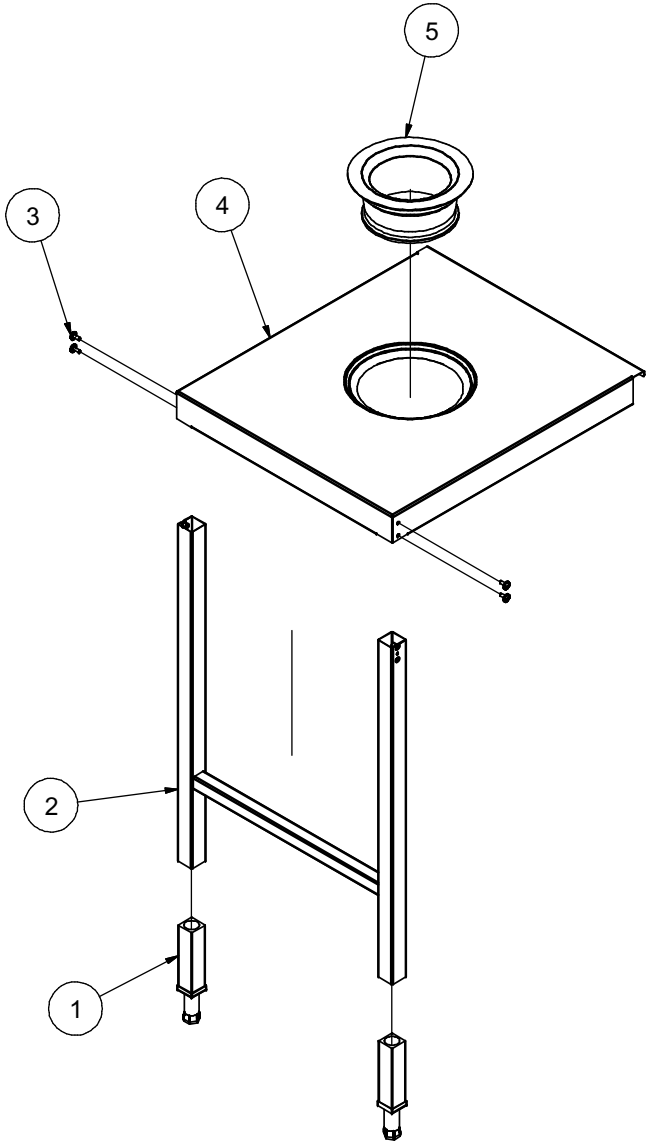


| | | |
|---|---|---|
| 5 | ST0 58 37-00 | Rubber ring |
| 4 | ST0 66 87-00 | Sorting top for rubber ring and legs |
| 3 | 552 30 01-35 | LSKS M6x16 Rfr |
| 2 | ST0 66 88-00 | Stand cpl, Sorting top |
| 1 | ST0 33 76-00 | Foot cpl. |
| Pos. | Art.No. | Description |

Prod.no.
9F865150-00 Sorting top,on legs, with hole and rubber ring

Edition 1 Date 2007-07

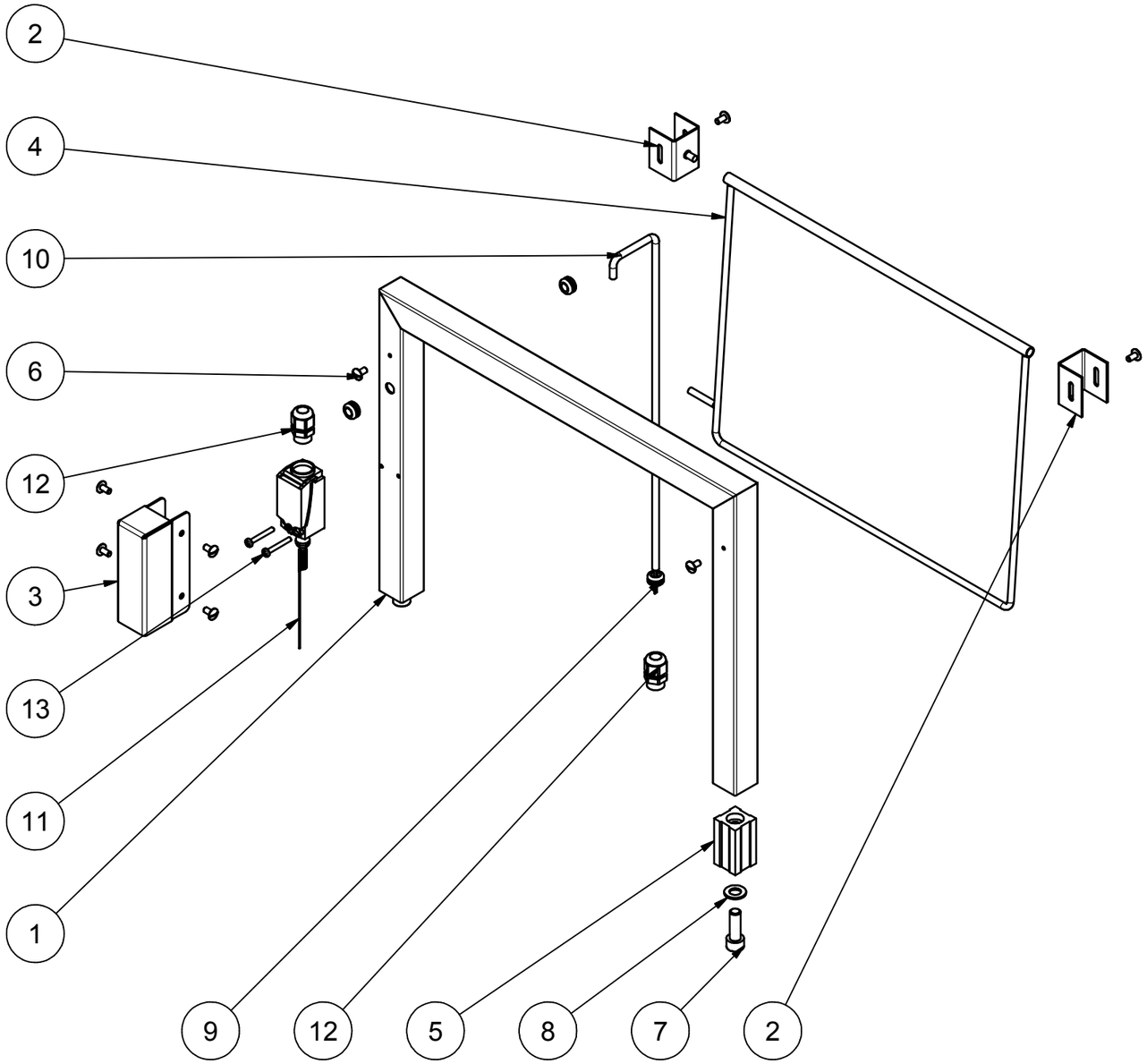


| | | | |
|---|---|---|---|
| 13 | 724 12 99-40 | Screw MRX M4x30 ss | |
| 12 | 762 21 09-06 | Cable gland Pr 18.6 | To 0812 |
| 12 | ST0 31 45-09 | Cable gland M16 | From 0901 |
| 11 | 491 46 55-00 | Limit switch | |
| 10 | 886 00 62-32 | Cable  Ölflex 2x1,5 gray | |
| 9 | 762 11 68-00 | Inlet Ø8 | |
| 8 | 734 11 73-09 | Washer 10,5x20x1,8 | |
| 7 | 725 54 95-40 | Screw MC6S 10x30 Ss. | |
| 6 | 552 30 01-23 | Screw LSKS M5x10 | |
| 5 | 476 78 13-00 | End socket | |
| 4 | 491 46 58-00 | Clamp cpl. | |
| 3 | 491 46 56-00 | Cover | |
| 2 | 491 46 57-00 | Bracket | |
| 1 | 491 46 59-00 | Stand | |
| Pos. | Art. No. | Description | Note |

Prod.no.
9F865140-00 Indicator, Empty tray

Edition 1 Date 2009-11